LONGFELLOW ELEMENTARY SCHOOL HVAC REPLACEMENT
COMPTON UNIFIED SCHOOL DISTRICT
1101 S DWIGHT AVE.
COMPTON, CA 90220

THIS APPLICATION DSA A#03-118423
SHALL NOT BE CLOSED WITH
CERTIFICATION UNTIL DSA A#03-119653
IS CLOSED WITH CERTIFICATION.

GENERAL NOTES

1. THESE DRAWINGS DO NOT CONTAIN THE NECESSARY COMPONENTS FOR CONSTRUCTION SAFETY.

2. LOCATIONS OF ALL UTILITIES SHOWN ARE APPROXIMATE AND CONTRACTOR SHALL EXERCISE EXTREME CAUTION IN EXCAVATING AND TRENCHING ON THIS SITE TO AVOID INTERCEPTING EXISTING PIPING OR CONDUITS. IT SHALL BE THE RESPONSIBILITY OF THE CONTRACTOR TO LOCATE ALL EXISTING UTILITIES WHETHER SHOWN HEREON OR NOT AND TO PROTECT THEM FROM DAMAGE. THE ARCHITECT IS NOT RESPONSIBLE FOR THE LOCATION OF UNDERGROUND UTILITIES OR STRUCTURES WHETHER OR NOT SHOWN OR DETAILED AND INSTALLED BY ANY OTHER CONTRACT. THE CONTRACTOR SHALL IMMEDIATELY NOTIFY THE ARCHITECT SHOULD ANY UNIDENTIFIED CONDITIONS BE DISCOVERED. THE CONTRACTOR SHALL BEAR ALL EXPENSE OF REPAIR OR REPLACEMENT OF UTILITIES OR OTHER PROPERTY DAMAGED BY OPERATIONS IN CONJUNCTION WITH THE EXECUTION OF THIS WORK.

3. THESE DOCUMENTS AND THE IDEAS AND DESIGNS INCORPORATED HEREIN, AS AN INSTRUMENT OF PROFESSIONAL SERVICE, ARE THE PROPERTY OF WLC ARCHITECTS, INC., AND ARE NOT TO BE USED, IN WHOLE OR IN PART, FOR ANY OTHER PROJECT WITHOUT THE WRITTEN AUTHORIZATION OF WLC ARCHITECTS, INC.

4. THE WORK SHOWN ON THESE DRAWINGS AS EXISTING CONDITIONS WAS PREPARED FROM INFORMATION FURNISHED BY THE OWNER. WHILE THIS INFORMATION IS BELIEVED TO BE RELIABLE, WLC ARCHITECTS, INC. IS NOT RESPONSIBLE FOR THE ACCURACY OR ADEQUACY OF ANY WORK SHOWN AS EXISTING NOR IS WLC ARCHITECTS, INC. RESPONSIBLE FOR ANY ERRORS OR OMISSIONS WHICH MAY HAVE BEEN INCORPORATED INTO THESE DRAWINGS AS A RESULT.

5. EACH BIDDER SHALL POSSESS AT THE TIME OF BID A CLASS B OR THE APPROPRIATE CLASS C CONTRACTOR'S LICENSE PURSUANT TO PUBLIC CONTRACT CODE SECTION 3300 AND BUSINESS AND PROFESSIONS CODE SECTION 7028.15. THE SUCCESSFUL BIDDER MUST MAINTAIN THE LICENSE THROUGHOUT THE DURATION OF THIS CONTRACT.

6. FIRE SAFETY DURING CONSTRUCTION

   A. GENERAL: FIRE SAFETY DURING CONSTRUCTION SHALL COMPLY WITH CALIFORNIA FIRE CODE (CFC) CALIFORNIA CODE OF REGULATIONS (CCR) TITLE 24, PART 9, CHAPTER 5 AND CHAPTER 33.

   B. ACCESS ROADS: FIRE DEPARTMENT ACCESS ROADS SHALL BE ESTABLISHED AND MAINTAINED IN ACCORDANCE WITH CHAPTER 5, SECTION 501.4 AND CHAPTER 33, SECTION 3310.

   C. WATER SUPPLY: WATER MAINS AND HYDRANTS SHALL BE OPERATIONAL IN ACCORDANCE WITH CHAPTER 5, SECTION 501.4 AND CHAPTER 33,SECTION 3312.

   D. BUILDING ACCESS: ACCESS TO BUILDINGS FOR THE PURPOSE OF FIREFIGHTING SHALL BE PROVIDED. CONSTRUCTION MATERIAL SHALL NOT BLOCK ACCESS TO BUILDINGS, HYDRANTS OR FIRE APPLIANCES.

   E. ALTERATIONS OF BUILDINGS: SHALL COMPLY WITH APPLICABLE PROVISIONS OF CHAPTER 33.

   F. DEMOLITION OF BUILDINGS: SHALL COMPLY APPLICABLE PROVISIONS OF CHAPTER 33.

   G. FIRE WATCH: MAINTAIN FIRE WATCH WHEN REQUIRED BY THE BUILDING OFFICIAL AND WHEN EXISTING FIRE PROTECTION SYSTEMS ARE SHUT DOWN FOR ALTERATIONS IN ACCORDANCE WITH CHAPTER 33, SECTION 3304.5. FIRE WATCH SHALL REMAIN IN EFFECT UNTIL EXISTING FIRE PROTECTION SYSTEMS ARE RETURNED TO SERVICE OR AS ALLOWED BY THE BUILDING OFFICIAL.

7. PENETRATIONS TO FIRE RATED MATERIALS OR ASSEMBLIES SHALL BE RESTORED TO EQUAL RATING. FIRE STOP SYSTEMS AS LISTED BY UNDERWRITERS LABORATORIES SHALL BE INSTALLED PER FIRE RESISTANCE DIRECTORY. FIRE STOP SYSTEMS SHALL BE AS SPECIFIED.

8. NONRESIDENTIAL ENERGY STANDARDS COMPLIANCE STATEMENT (TITLE 24, PART 6):

   THE DESIGN INDICATED HEREIN COMPLIES WITH THE REQUIREMENTS OF THE ENERGY CONSERVATION STANDARDS OF TITLE 24, PART 6, CALIFORNIA CODE OF REGULATIONS. THE PROPOSED BUILDING(S) WILL BE IN COMPLIANCE WITH THE ENERGY CONSERVATION STANDARDS PROVIDED IT (THEY) IS (ARE) BUILT ACCORDING TO THESE DRAWINGS AND SPECIFICATIONS AND PROVIDED ANY FUTURE IMPROVEMENTS ARE COMPLETED ACCORDING TO THE REQUIREMENTS OF TITLE 24, PART 6, CALIFORNIA CODE OF REGULATIONS. THESE PLANS AND SPECIFICATIONS HAVE BEEN PREPARED TO INCLUDE ALL SIGNIFICANT ENERGY CONSERVATION FEATURES REQUIRED FOR COMPLIANCE WITH THE STANDARDS. BUILDING AREAS THAT ARE UNCONDITIONED AND/OR NOT SUBJECT TO THE STANDARDS ARE INDICATED ON THE PLANS.

8. (CONT) ENVELOPE MANDATORY MEASURES:

   A. INSTALLED INSULATING MATERIALS SHALL HAVE BEEN CERTIFIED BY THE MANUFACTURER TO COMPLY WITH THE CALIFORNIA QUALITY STANDARDS FOR INSULATING MATERIAL.

   B. ALL INSULATING MATERIALS SHALL BE INSTALLED IN COMPLIANCE WITH THE FLAME SPREAD RATING AND SMOKE DENSITY REQUIREMENTS OF TITLE 24, PART 2, CALIFORNIA CODE OF REGULATIONS, SECTIONS 720 AND 2603.

   C. ALL EXTERIOR JOINTS AND OPENINGS IN THE BUILDING ENVELOPE THAT ARE POTENTIAL AND OBSERVABLE SOURCES OF AIR LEAKAGE SHALL BE CAULKED, GASKETED, WEATHERSTRIPPED OR OTHERWISE SEALED.

   D. SITE CONSTRUCTED DOORS, WINDOWS, AND SKYLIGHTS SHALL BE CAULKED BETWEEN THE UNIT AND THE BUILDING, AND SHALL BE WEATHERSTRIPPED (EXCEPT FOR UNFRAMED GLASS DOORS AND FIRE DOORS).

   E. MANUFACTURED DOORS AND WINDOWS INSTALLED SHALL HAVE AIR INFILTRATION RATES CERTIFIED BY THE MANUFACTURER IN ACCORDANCE WITH TITLE 24, PART 6, CALIFORNIA CODE OF REGULATIONS, SECTION 110.6.

   F. MANUFACTURED FENESTRATION PRODUCTS IN THE ENVELOPE OF THE BUILDING, INCLUDING, BUT NOT LIMITED TO, WINDOWS, SLIDING GLASS DOORS, FRENCH DOORS, SKYLIGHTS, CURTAIN WALLS, AND GARDEN WINDOWS MUST BE LABELED FOR U-VALUE IN ACCORDANCE WITH THE (NFRC) NATIONAL FENESTRATION RATING COUNCIL'S INTERIM U-VALUE RATING PROCEDURE.

   G. DEMISING WALL INSULATION SHALL BE INSTALLED IN ALL OPAQUE PORTIONS OF FRAMED WALLS (EXCEPT DOORS).

9. PROOF LOAD TESTS FOR EXPANSION TYPE ANCHOR BOLTS:

   A. ANCHOR DIAMETER REFERS TO THE THREAD SIZE FOR THE WEDGE CATEGORY ANCHOR.

   B. APPLY PROOF TEST LOADS TO WEDGE ANCHORS WITHOUT REMOVING THE NUT IF POSSIBLE. IF NOT, REMOVE NUT AND INSTALL A THREADED COUPLER TO THE SAME TIGHTNESS OF THE ORIGINAL NUT USING A TORQUE WRENCH AND APPLY LOAD.

   C. REACTION LOADS FROM TEST FIXTURES MAY BE APPLIED CLOSE TO THE ANCHOR BEING TESTED, PROVIDED THE ANCHOR IS NOT RESTRAINED FROM WITHDRAWING BY THE FIXTURE(S).

   D. TEST EQUIPMENT IS TO BE CALIBRATED BY AN APPROVED TESTING LABORATORY IN ACCORDANCE WITH STANDARD RECOGNIZED PROCEDURES.

   E. THE FOLLOWING CRITERIA APPLY FOR THE ACCEPTANCE OF INSTALLED ANCHORS:

      1. HYDRAULIC RAM METHOD: THE ANCHOR SHOULD HAVE NO OBSERVABLE MOVEMENT AT THE APPLICABLE TEST LOAD. FOR WEDGE TYPE ANCHORS, A PRACTICAL WAY TO DETERMINE OBSERVABLE MOVEMENT IS THAT THE WASHER UNDER THE NUT BECOMES LOOSE. DROP IN ANCHORS ARE ONLY TO BE TESTED WITH THIS METHOD.

      2. TORQUE WRENCH METHOD: THE APPLICABLE TEST TORQUE MUST BE REACHED WITHIN THE FOLLOWING LIMITS FOR WEDGE ANCHORS: ONE-HALF (1/2) TURN OF THE NUT.

      3. IF MANUFACTURERS TORQUE IS LESS THAN SPECIFIED TEST TORQUE THE MANUFACTURERS LISTED TORQUE SHALL BE USED FOR TESTING.

   H. TESTING SHOULD OCCUR 24 HOURS MINIMUM AFTER INSTALLATION OF THE SUBJECT ANCHORS

   I. ALL EXPANSION TYPE ANCHOR BOLTS USED FOR STRUCTURAL APPLICATIONS SHALL BE TESTED. ALL ANCHOR BOLTS OF THE EXPANSION TYPE USED FOR NON STRUCTURAL APPLICATIONS (LOADED IN EITHER PULLOUT OR SHEAR) SHALL HAVE 50 PERCENT OF THE BOLTS (ALTERNATE BOLTS IN ANY GROUP ARRANGEMENT ALLOWED BY THE TYPE OF SUBSTRATE AND DIAMETER OF BOLT LISTED BELOW UNDER TEST VALUES TABLE) PROOF TESTED IN TENSION TO TWICE THE ALLOWABLE TENSION LOAD. IF THERE ARE ANY FAILURES, THE IMMEDIATELY ADJACENT BOLTS MUST THEN ALSO BE TESTED. TESTING SHALL BE PERFORMED IN ACCORDANCE WITH TITLE 24, PART 2, SECTION 1910A.5

   J. ALL BOLTS MUST HAVE ICC/ES APPROVAL.

   A. ALL ANCHOR BOLTS OF THE EXPANSION TYPE INSTALLED IN CONCRETE SHALL BE ONE OF THE FOLLOWING:

      1. ITW RAMSET/REDHEAD-WEDGE ANCHOR-ICC/ES NO. 2427
      2. HILTI, INC.- QWIK BOLT TZ -WEDGE ANCHOR-ICC/ES NO. 1917
      3. SIMPSON - STRONGBOLT 2 - WEDGE ANCHOR - ICC/ES NO. 3037

MIMIMUM TEST VALUES
NORMALWEIGHT OR LIGHTWEIGHT CONCRETE

ANCHOR		WEDGE		---		
DIA. (IN)	TENSION LOAD (LBS)	TORQUE (FT-LBS)	EMBED MENT (IN)	---	---	---
---	---	---	---	---	---	---
3/8	1,100	25	2	---	---	---
1/2	2,000	50	3-1/4	---	---	---
5/8	2,300	80	4-1/4	---	---	---
3/4	3,700	150	4-3/4	---	---	---

   B. ALL ANCHOR BOLTS OF THE EXPANSION TYPE INSTALLED IN GROUT FILLED MASONRY SHALL BE ONE OF THE FOLLOWING:

      1. HILTI, INC.-KWIK BOLT III-WEDGE ANCHOR-ICC/ES NO. 1385
      2. SIMPSON-STRONGBOLT 2-WEDGE ANCHOR-IAMPO NO. ER-240

MIMIMUM TEST VALUES
GROUT FILLED CONCRETE MASONRY

ANCHOR		WEDGE		---		
DIA. (IN)	TENSION LOAD (LBS)	TORQUE (FT-LBS)	EMBED MENT (IN)	---	---	---
1/4	1,080	4	2	---	---	---
3/8	1,564	15	2-1/2	---	---	---
1/2	1,810	25	3-1/2	---	---	---
5/8	2,484	65	4	---	---	---
3/4	3,290	120	4-3/8	---	---	---

11. POWDER DRIVEN CONCRETE FASTENERS:

   A. GENERAL: USE OF POWDER DRIVEN CONCRETE FASTENERS FOR TENSION LOADS IS LIMITED TO SUPPORT OF MINOR LOADS LIKE ACOUSTICAL CEILINGS, DUCT WORK, CONDUIT.

   B. ALLOWABLE LOADS: IN GENERAL, LOADS SHOULD BE LIMITED TO LESS THAN 100 POUNDS. HOWEVER, GREATER LOADS MAY BE PERMITTED FOR SPECIAL CASES WHEN APPROVED BY THE CHECKING SUPERVISOR OR FIELD ENGINEER.

   C. TESTING: THE OPERATOR, TOOL, AND FASTENER SHALL BE PREQUALIFIED BY THE PROJECT INSPECTOR. HE SHALL OBSERVE THE TESTING OF THE FIRST 10 FASTENER INSTALLATIONS. A TEST "PULL-OUT" LOAD OF NOT LESS THAN TWICE THE DESIGN LOAD, OR 200 POUNDS, WHICHEVER IS GREATER SHALL BE APPLIED TO THE PIN IN SUCH A MANNER AS NOT TO RESIST THE SPALLING TENDENCY OF THE CONCRETE AROUND THE PIN. THEREAFTER, RANDOM TESTS UNDER THE PROJECT INSPECTOR'S SUPERVISION SHALL BE MADE OF APPROXIMATELY 1 IN 10 PINS, EXCEPT THAT WHEN THE DESIGN LOAD EXCEEDS 100 POUNDS, ONE HALF OF THE PINS SHALL BE TESTED. SHOULD FAILURE OCCUR ON ANY PIN TESTED, ALL INSTALLATIONS MUST BE TESTED AND UNFAIR PINS REPLACED.

   D. ALL POWDER DRIVEN CONCRETE FASTENERS SHALL BE ONE OF THE FOLLOWING:

      1. HILTI, INC.
         X-CP 72 PINS - WOOD PLATE - ICC/ES NO. 2379
         X-U PINS - STEEL TRACK - ICC/ES NO. 2269
      2.. ITW RAMSET/REDHEAD
         DRIVE PIN - WOOD PLATE - ICC/ES NO. 2690
         DRIVE PIN - STEEL TRACK - ICC/ES NO. 1799
      3. SIMPSON STRONG-TIE CO., INC.
         PDPWL-300MG - WOOD PLATE - ICC/ES NO. 2138
         PDPA-125- STEEL TRACK - ICC/ES NO. 2138

I find that: ☒ All drawings or sheets listed on the cover or index sheet ☐ This drawing or page

☒ is/are in general conformance with the project design intent, and ☒ has/have been coordinated with the project plans and specifications.	☐ is/are in general conformance with the project design intent, and ☐ has/have been coordinated with the project plans and specifications.
Signature: Mark Graham — Date: 03/06/18	Signature — Date
Architect or Engineer designated to be in general responsible charge	Architect or Engineer delegated responsibility for this portion of the work
Print Name: MARK GRAHAM	Print Name
License Number: C-26046 — Expiration Date: 03/31/18	License Number — Expiration Date

12. INSPECTOR OF RECORD REQUIREMENTS

   A. ONE OR MORE INSPECTORS EMPLOYED BY THE OWNER IN ACCORDANCE WITH THE REQUIREMENTS OF TITLE 24 OF THE CALIFORNIA CODE OF REGULATIONS WILL BE ASSIGNED TO THE WORK. THE INSPECTORS DUTIES ARE SPECIFICALLY DEFINED IN SECTION 4-342 OF SAID TITLE 24, PART 1 AND IN ADDITION SHALL BE AS STIPULATED IN INTERPRETATION OF REGULATION DOCUMENT IR A-8.

   B. INSPECTOR SHALL BE CERTIFIED AS A CLASS 3 INSPECTOR THROUGH THE DIVISION OF THE STATE ARCHITECT INSPECTOR EXAMINATION PROGRAM. INSPECTOR SHALL ALSO BE SPECIFICALLY APPROVED BY THE DIVISION OF THE STATE ARCHITECT FOR THIS PROJECT AT LEAST 10 DAYS PRIOR TO THE START OF ANY WORK FOR THIS PROJECT.

14. ALL WORK SHOWN ON THESE DRAWINGS SHALL COMPLY WITH THE REQUIREMENTS OF TITLE 24, CALIFORNIA CODE OF REGULATIONS (CCR).

15. CHANGES TO THE APPROVED DRAWINGS AND SPECIFICATIONS SHALL BE MADE BY AN ADDENDUM OR A CONSTRUCTION CHANGE DOCUMENT APPROVED BY THE DIVISION OF THE STATE ARCHITECT, AS REQUIRED BY TITLE 24, CCR, PART 1, SECTION 4-338.

16. THE INTENT OF THESE DRAWINGS AND SPECIFICATIONS IS THAT THE WORK OF THE ADDITION, ALTERATION OR RECONSTRUCTION IS IN COMPLIANCE WITH THE REQUIREMENTS OF TITLE 24, CALIFORNIA CODE OF REGULATIONS. SHOULD ANY CONDITIONS SUCH AS DETERIORATION OR NON-COMPLYING CONSTRUCTION BE DISCOVERED WHICH IS NOT IDENTIFIED BY THE CONTRACT DOCUMENTS WHEREIN THE FINAL WORK WOULD NOT COMPLY WITH THE REQUIREMENTS OF TITLE 24, CALIFORNIA CODE OF REGULATIONS, THE CONTRACTOR SHALL IMMEDIATELY NOTIFY THE OWNER AND THE ARCHITECT OF THE CONDITION IN WRITING. NECESSARY INFORMATION REQUIRED TO CORRECT THE CONDITIONS ENCOUNTERED WILL BE ISSUED BY THE ARCHITECT. A CHANGE ORDER MAY BE ISSUED TO ADJUST THE CONTRACT SUM OR TIME COMMENSURATE WITH THE AMOUNT OF ADDITIONAL WORK REQUIRED IF ANY. A CONSTRUCTION CHANGE DOCUMENT SHALL BE APPROVED BY THE DIVISION OF THE STATE ARCHITECT PRIOR TO PROCEEDING WITH THE WORK REQUIRED BY THE CHANGE ORDER.

17. DSA ACCEPTED TESTING LABORATORY DIRECTLY EMPLOYED BY THE DISTRICT (OWNER) SHALL CONDUCT ALL REQUIRED TEST AND INSPECTIONS FOR THE PROJECT.

PROJECT TEAM

PROJECT ADDRESS
LONGFELLOW ELEMENTARY SCHOOL
1101 S. DWIGHT STREET
COMPTON, CA 90220
PHONE: 310-898-6460

OWNER
COMPTON UNIFIED SCHOOL DISTRICT
501 S SANTA FE AVENUE
COMPTON, CA 90221
PHONE: 310-604-6507 FAX: 310-763-0105

ARCHITECT
WLC ARCHITECTS, INC.
8163 ROCHESTER AVENUE., SUITE 100
RANCHO CUCAMONGA, CA 91730
PHONE: 909-987-0909 FAX: 909-980-9980

MECHANICAL ENGINEER
OED
5200 E LA PALMA AVE
ANAHEIM, CA 92807
PHONE: 714-693-2277

ELECTRICAL ENGINEER
A&F ENGINEERING GROUP, INC.
9320 BASELINE RD., SUITE C
RANCHO CUCAMONGA, CA 91701
PHONE: 909-941-3008 FAX: 909-941-8211

SCOPE OF WORK DESCRIPTION

THE SCOPE OF THE WORK AS STATED BELOW IS FOR DSA PLAN REVIEW PURPOSES ONLY AND DOES NOT CONSTITUTE A DETAILED AND FULL EXPLANATION OF THE REQUIREMENTS OF THE CONTRACT DOCUMENTS.

REPLACE (1) EXISTING ROOF MOUNTED HVAC UNIT AT ADMINISTRATION BUILDING A AND (5) EXISTING FLOOR MOUNTED HVAC UNITS AT CLASSROOM BUILDINGS C, D, F, G AND K WITH NEW PACKAGE HVAC UNITS, AND MODIFY (1) EXISTING FLOOR MOUNTED HVAC UNIT AT CLASSROOM BUILDING E AND SITE WORKS.

VICINITY MAP

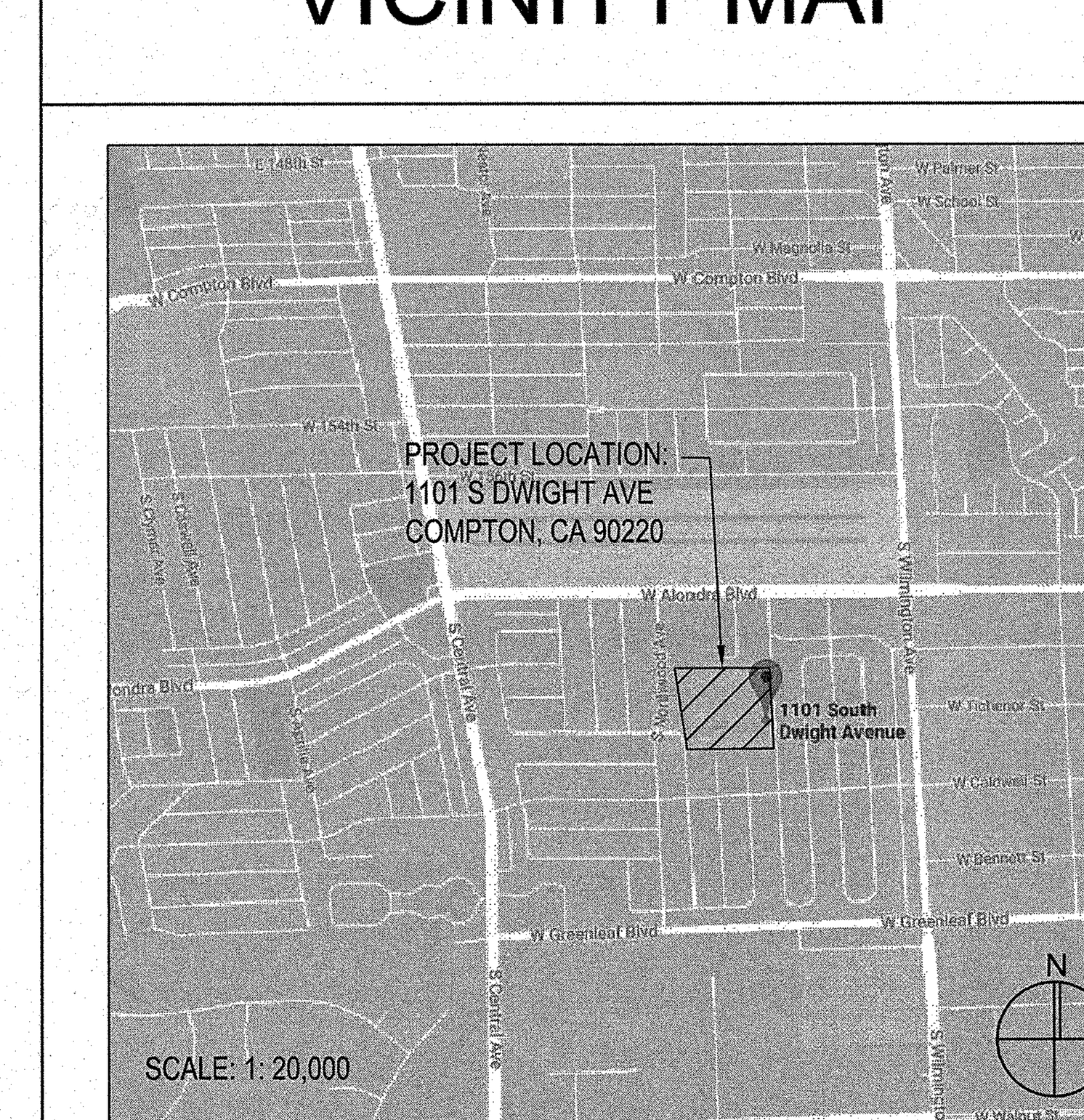

SHEET INDEX

DRAWING REF NO	DESCRIPTION
ARCHITECTURAL	
A0.1	GENERAL NOTE AND PROJECT DIRECTORY
A0.2	ARCHITECTURAL DRAWINGS ABBREVIATIONS AND GOVERNING CODE
A1.0	SITE PLAN AND BUILDING A DEMO AND NEW ROOF PLANS
A2.1	BUILDING C AND D ENLARGED DEMO AND NEW FLOOR PLANS
A2.2	BUILDING F AND G ENLARGED DEMO AND NEW FLOOR PLANS
A2.3	BUILDING K ENLARGED DEMO AND NEW FLOOR PLANS AND DETAILS
A3.1	BUILDING K ENLARGED DEMO AND NEW REFLECTED CEILING PLANS
STRUCTURAL	
S1.0	GENERAL NOTE AND DETAILS
S1.1	DETAILS
S1.2	DETAILS
S2.1	BUILDING C, D, E, F, G AND K PARTIAL FLOOR PLANS
MECHANICAL	
M-0.1	MECHANICAL GENERAL NOTE AND LEGEND
M-0.2	MECHANICAL SCHEDULES
M-2.0	BUILDING A DEMOLITION AND REMODEL FLOOR PLANS
M-2.1	BUILDING C DEMOLITION AND REMODEL FLOOR PLANS
M-2.2	BUILDING D DEMOLITION AND REMODEL FLOOR PLANS
M-2.3	BUILDING E DEMOLITION AND REMODEL FLOOR PLANS
M-2.4	BUILDING F DEMOLITION AND REMODEL FLOOR PLANS
M-2.5	BUILDING G DEMOLITION AND REMODEL FLOOR PLANS
M-2.6	BUILDING K DEMOLITION AND REMODEL FLOOR PLANS
M-3.1	MECHANICAL SECTIONS
M-4.1	MECHANICAL DETAILS
M-4.3	MECHANICAL DETAILS
M-4.4	MECHANICAL DETAILS
M-5.1	WIRING DIAGRAM DETAILS
M-5.2	WIRING DIAGRAM DETAILS
M-5.3	WIRING DIAGRAM DETAILS
M-5.4	WIRING DIAGRAM DETAILS
M-5.5	WIRING DIAGRAM DETAILS
M-6.0	TITLE 24 BUILDING A
M-6.1	TITLE 24 BUILDING C
M-6.2	TITLE 24 BUILDING D
M-6.3	TITLE 24 BUILDING E
M-6.4	TITLE 24 BUILDING F
M-6.5	TITLE 24 BUILDING G
M-6.6	TITLE 24 BUILDING K
ELECTRICAL	
E0.1	GENERAL NOTES SYMBOL LIST & DETAILS
E0.2	DEMOLITION AND REMODEL SINGLE LINE DIAGRAM
E0.3	PANEL SCHEDULES
E1.0	SITE PLAN
E2.1	BUILDING C DEMOLITION AND REMODEL PLANS
E2.2	BUILDING D DEMOLITION AND REMODEL PLANS
E2.3	BUILDING E DEMOLITION AND REMODEL PLANS
E2.4	BUILDING F DEMOLITION AND REMODEL PLANS
E2.5	BUILDING G DEMOLITION AND REMODEL PLANS
E2.6	BUILDING K DEMOLITION AND REMODEL PLANS

WLC ARCHITECTS
CLIENT FOCUSED • PASSION DRIVEN
SOUTHERN CALIFORNIA
8163 ROCHESTER AVENUE, SUITE 100
RANCHO CUCAMONGA
CALIFORNIA 91730-0729
TEL: 909-987-0909
www.wlcarchitects.com

LONGFELLOW ELEMENTARY SCHOOL
HVAC REPLACEMENT
COMPTON UNIFIED SCHOOL DISTRICT
1101 S DWIGHT AVE.
COMPTON, CA 90220

LICENSED ARCHITECT
MARK GRAHAM
C-26046
03-31-19
STATE OF CALIFORNIA

CONSULTANT

IDENTIFICATION STAMP
DIV. OF THE STATE ARCHITECT
OFFICE OF REGULATION SERVICES
APPL 03-118423
AC — FLS SS EY
DATE MAR 0 8 2018
FILE: 19-23
46 SHEETS TOTAL + DSA 103 + SPECS

NO	DATE	BY	DESCRIPTION
#	REVISIONS		

DRAWN:	CHECKED:
DATE: 3/6/2018	SCALE:
PROJECT NUMBER: 1723400	

GENERAL NOTES & PROJECT DIRECTORY

DRAWING NUMBER: A0.1

ARCHITECTURAL DRAWING ABBREVIATIONS

SYMBOLS

&	AND
∠	ANGLE
@	AT
CL	CENTERLINE
⊏	CHANNEL
ø	DIAMETER OR ROUND
(E)	EXISTING
(N)	NEW
d	PENNY (NAILS)
⊥	PERPENDICULAR
PL	PLATE
#	POUND OR NUMBER

A/C	AIR CONDITIONING
A/E	ARCHITECT/ENGINEER
AB	ANCHOR BOLT
ABAN	ABANDON
ABC	AGGREGATE BASE COURSE
ABV	ABOVE
AC	ASPHALTIC CONCRETE
ACC	ACCESS(IBLE)
ACST	ACOUSTICAL
ACT	ACOUSTICAL CEILING TILE
AD	AREA DRAIN
ADDM	ADDENDUM
ADH	ADHESIVE
ADJ	ADJUSTABLE
ADJC	ADJACENT
AFF	ABOVE FINISHED FLOOR
AFG	ABOVE FINISHED GRADE
AGGR	AGGREGATE
AHU	AIR HANDLING UNIT
AL	ALUMINUM
ALT	ALTERNATE
ANC	ANCHOR, ANCHORAGE
APLD	APPLIED
APPRX	APPROXIMATE
ARCH	ARCHITECT(URAL)
ASC	ABOVE SUSPENDED CEILING
ASPH	ASPHALT
ASSY	ASSEMBLY
ASYM	ASYMMETRICAL
AWG	AMERICAN WIRE GAGE

BC	BACK OF CURB
BD	BOARD
BITUM	BITUMINOUS
BLDG	BUILDING
BLK	BLOCK
BLKG	BLOCKING
BLW CLG	BELOW CEILING
BLW FFLR	BELOW FINISH FLOOR
BLW	BELOW
BM	BENCH MARK
BN	BOUNDARY NAILING
BOT	BOTTOM
BRCG	BRACING
BRDG	BRIDGING
BRG	BEARING
BRK	BRICK
BRKT	BRACKET
BRS	BRASS
BRZ	BRONZE
BS	BOTH SIDES
BSMT	BASEMENT
BTWN	BETWEEN
BUR	BUILT UP ROOFING
BW	BOTH WAYS

C&G	CURB AND GUTTER
CAB	CABINET
CAD	CADMIUM
CB	CATCH BASIN
CBB	CEMENTITIOUS BACKER BOARD
CEM	CEMENT
CER	CERAMIC
CFCI	CONTRACTOR FURNISH CONTRACTOR INSTALLED
CFLG	COUNTERFLASHING
CFOI	CONTRACTOR FURNISH OWNER INSTALLED
CG	CORNER GUARD
CHBD	CHALKBOARD
CHFR	CHAMFER
CI	CAST IRON
CIR	CIRCLE
CIRC	CIRCULAR, CIRCUMFERENCE
CJ	CONSTRUCTION JOINT
CL	CHAIN LINK
CLG	CEILING
CLJ	CONTROL JOINT
CLL	CONTRACT LIMIT LINE
CLOS	CLOSURE
CLR	CLEAR(ANCE)
CLRM	CLASSROOM
CMPST	COMPOSITION
CMU	CONCRETE MASONRY UNIT
CNCL	CONCEALED
CNR	CORNER
CNTR	COUNTER
COL	COLUMN
COM	COMMON
COMB	COMBINATION
COMPT	COMPARTMENT
CONC	CONCRETE
CONF	CONFERENCE
CONN	CONNECTION
CONSTR	CONSTRUCTION
CONT	CONTINUOUS (ATION)
CONTR	CONTRACT(OR)
COORD	COORDINATE
CORR	CORRIDOR
CPR	COPPER
CPRS	COMPRESS(ED), (ION), (IBLE)
CPT	CARPET(ED)
CRS	COLD ROLLED STEEL
CS	CAST STONE
CSG	CASING
CSK	COUNTERSUNK
CSMT	CASEMENT
CSWK	CASEWORK
CT	CERAMIC TILE
CTB	CERAMIC TILE BASE
CTF	CERAMIC TILE FLOOR
CTG	COATING
CTR	CENTER

CUFT	CUBIC FOOT
CUIN	CUBIC INCH
CUST	CUSTODIAN
CUYD	CUBIC YARD

D	DRAIN
DA	DOUBLEACTING
DBL	DOUBLE
DEMO	DEMOLISH, DEMOLITION
DEP	DEPRESSED
DEPT	DEPARTMENT
DET	DETAIL
DF	DRINKING FOUNTAIN
DH	DOUBLE HUNG
DIA	DIAMETER
DIAG	DIAGONAL
DIFF	DIFFUSER
DIM	DIMENSION
DISP	DISPENSER
DIV	DIVISION
DMPF	DAMPPROOFING
DMT	DEMOUNTABLE
DN	DOWN
DR	DOOR
DRB	DRAINBOARD
DRLV	DOOR LOUVER
DS	DOWNSPOUT
DSP	DRY STANDPIPE
DT	DRAIN TILE
DVTL	DOVETAIL
DW	DISHWASHER
DWG	DRAWING
DWL	DOWEL
DWR	DRAWER

E	EAST
EA	EACH
EAR	EXHAUST AIR REGISTER
EB	EXPANSION BOLT
EE	EACH END
EF	EACH FACE
EFS	EXTERIOR FINISH SYSTEM
EHD	ELECTRIC HAND DRYER
EIFS	EXTERIOR INSULATION AND FINISH SYSTEM
EJ	EXPANSION JOINT
EL	ELEVATION
ELAST	ELASTOMERIC
ELEC	ELECTRIC(AL)
ELEV	ELEVATOR
EM	EXPANDED METAL
EMER	EMER EMERGENCY
EN	EDGE NAILING
ENCL	ENCLOSE(URE)
ENGR	ENGINEER
ENTR	ENTRANCE
EP	ELECTRICAL PANELBOARD
EQ	EQUAL
EQUIP	EQUIPMENT
ESC	ESCUTCHEON
ESCL	ESCALATOR
ESMT	EASEMENT
EW	EACH WAY
EWC	ELECTRIC WATER COOLER
EWH	ELECTRICAL WATER HEATER
EWS	EYE WASH STATION
EXC	EXCAVATE
EXG	EXISTING
EXH	EXHAUST
EXP	EXPOSED
EXPN	EXPANSION
EXS	EXTRA STRONG
EXT	EXTERIOR

F/F	FACE TO FACE
FA	FIRE ALARM
FAB	FABRIC
FBD	FIBERBOARD
FBRK	FIRE BRICK
FCBRK	FACE BRICK
FD	FLOOR DRAIN
FDTN	FOUNDATION
FE	FIRE EXTINGUISHER
FEC	FIRE EXTINGUISHER CABINET
FFA	FROM FLOOR ABOVE
FFB	FROM FLOOR BELOW
FFEL	FINISHED FLOOR ELEVATION
FFL	FINISHED FLOOR LINE
FGL	FIBERGLASS
FHC	FIRE HOSE CABINET
FHMS	FLATHEAD MACHINE SCREW
FHWS	FLATHEAD WOOD SCREW
FIN	FINISH(ED)
FJT	FLUSH JOINT
FLASH	FLASH(ING)
FLDG	FOLDING
FLG	FLOORING
FLR	FLOOR
FLUOR	FLUORESCENT
FN	FIELD NAILING
FOC	FACE OF CONCRETE
FOF	FACE OF FINISH
FOG	FACE OF GRID
FOM	FACE OF MASONRY
FOS	FACE OF STUDS
FPL	FIREPLACE
FPRF	FIREPROOF(ING)
FR	FRAME(D), (ING)
FRG	FIBER REINFORCED GYPSUM
FRGL	FIRE RESISTIVE GLAZING
FRP	FIBERGLASS REINFORCED PLASTIC
FRTD	FIRE RATED
FRTW	FIRE RETARDANT TREATED WOOD
FRZ	FREEZER
FS	FAR SIDE
FSTN	FASTEN, FASTENER
FT	FOOT OR FEET
FTG	FOOTING
FURG	FURRED (ING)
FUT	FUTURE
FWC	FABRIC WALL COVERING

GA	GAGE
GAL	GALLON
GALV	GALVANIZED
GB	GRAB BAR
GFRC	GLASS FIBER REINFORCED CONCRETE
GI	GALVANIZED IRON
GL	GLASS
GLU LAM	GLUE LAMINATED
GLZ	GLAZING
GLZCMU	GLAZED CONCRETE MASONRY UNITS
GND	GROUND
GPC	GYPSUM PLASTER CEILING
GR LN	GRADE LINE
GR BM	GRADE BEAM
GR	GRADE, (ING)
GRBD	GARBAGE DISPOSER
GSB	GYPSUM SHEATHING BOARD
GSS	GALVANIZED STEEL SHEET
GST	GLAZED STRUCTURAL TILE
GT	GROUT
GVL	GRAVEL
GYP	GYPSUM

HB	HOSE BIBB
HC	HOLLOW CORE
HD	HEAVY DUTY
HD JT	HEAD JOINT
HDAS	HEADED ANCHOR STUD
HDR	HEADER
HDW	HARDWARE
HDWD	HARDWOOD
HEX	HEXAGONAL
HGR	HANGER
HLDN	HOLD DOWN
HM	HOLLOW METAL
HMD	HOLLOW METAL DOOR
HMDF	HOLLOW METAL DOOR AND FRAME
HMF	HOLLOW METAL FRAME
HNDRL	HANDRAIL
HORIZ	HORIZONTAL
HPT	HIGH POINT
HR	HOUR
HT	HEIGHT
HTG	HEATING
HVAC	HEATING/VENTILATING/ AIR CONDITIONING
HWH	HOT WATER HEATER

ID	INSIDE DIAMETER
INCL	INCLUDE(D), (ING)
INSTL	INSTALL
INSUL	INSULATE(D), (ION)
INT	INTERIOR
INV	INVERT
IPS	IRON PIPE SIZE

JAN	JANITOR
JST	JOIST
JT	JOINT

KIT	KITCHEN
KO	KNOCKOUT
KPL	KICKPLATE

LAB	LABORATORY
LAD	LADDER
LAM	LAMINATE(D)
LAV	LAVATORY
LBL	LABEL
LBR	LUMBER
LBS	POUND
LCT	LINOLEUM COMPSITE TILE
LDR	LEADER
LG	LENGTH
LH	LEFT HAND
LHR	LEFT HAND REVERSE
LKNT	LOCKNUT
LKR	LOCKER
LKWASH	LOCKWASHER
LLH	LONG LEG HORIZONTAL
LLV	LONG LEG VERTICAL
LMST	LIMESTONE
LNDSCP	LANDSCAPE(D)
LNTL	LINTEL
LP	LIGHTPROOF
LPT	LOW POINT
LT	LIGHT
LTWT	LIGHT WEIGHT
LVL	LEVEL(ER)
LVR	LOUVER
LW	LIGHTWEIGHT CONCRETE
LWIC	LIGHTWEIGHT INSULATING CONCRETE

MAINT	MAINTAIN(ANCE)
MAS	MASONRY
MATL	MATERIAL
MAX	MAXIMUM
MB	MACHINE BOLT
MBR	MEMBER
MC	MEDICINE CABINET
MCB	METAL CORNER BEAD
MDO	MEDIUM DENSITY OVERLAID
MECH	MECHANICAL
MED	MEDIUM
MEMB	MEMBRANE
MEZZ	MEZZANINE
MFD	METAL FLOOR DECKING
MFR	MANUFACTURE(ER)
MH	MANHOLE
MIN	MINIMUM
MIRR	MIRROR
MISC	MISCELLANEOUS
ML	METAL LATH
MLDG	MOLDING
MLWK	MILLWORK
MO	MASONRY OPENING
MOD	MODULE (AR)
MR	MOISTURE RESISTANT
MRB	MARBLE
MRD	METAL ROOF DECKING
MS	MACHINE SCREW
MTD	MOUNTED
MTL	METAL

MTR	MORTAR
MULL	MULLION
MVBL	MOVABLE
MWP	MEMBRANE WATER PROOFING
N	NORTH
NA	NOT APPLICABLE
NAT	NATURAL
NCOMBL	NONCOMBUSTIBLE
NE	NOT EXCEEDING
NF	NEAR FACE
NIC	NOT IN CONTRACT
NLB	NON-LOAD BEARING
NM	NONMETALLIC
NO	NUMBER
NOM	NOMINAL
NR	NOISE REDUCTION
NRC	NOISE REDUCTION COEFFICIENT
NRCA	NATIONAL ROOFING CONTRACTORS ASSOCIATION
NS	NEAR SIDE
NTS	NOT TO SCALE

O/O	OUT TO OUT
OA	OVERALL
OBS	OBSCURE
OC	ON CENTER(S)
OD	OUTSIDE DIAMETER
OFCI	OWNER FURNISHED - CONTRACTOR INSTALLED
OFF	OFFICE
OFOI	OWNER FURNISHED - OWNER INSTALLED
OFS	OUTSIDE FACE OF STUD
OHMS	OVALHEAD MACHINE SCREW
OHWS	OVALHEAD WOOD SCREW
OPH	OPPOSITE HAND
OPNG	OPENING
OPP	OPPOSITE
OPQ	OPAQUE
OPR	OPERABLE
ORD	OVERFLOW ROOF DRAIN
OVFL	OVERFLOW
OVHD	OVERHEAD

PAR	PARALLEL
PAT	PATTERN
PB	PANIC BAR
PBD	PARTICLE BOARD
PC	PORTLAND CEMENT
PCC	PRECAST CONCRETE
PCP	PORTLAND CEMENT PLASTER
PED	PEDESTAL
PERF	PERFORATE(D)
PERIM	PERIMETER
PERP	PERPENDICULAR
PGBD	PEGBOARD
PH	PHASE
PHS	PHILLIPS HEAD SCREW
PI	POINT OF INTERSECTION
PIV	POST INDICATOR VALVE
PL	PROPERTY LINE
PLAM	PLASTIC LAMINATE
PLAS	PLASTER
PLBG	PLUMBING
PLYWD	PLYWOOD
PNEU	PNEUMATIC
PNL	PANEL
PNT	PAINT(ED)
POL	POLISHED
POLY	POLYETHYLENE
PORC	PORCELAIN
PORT	PORTABLE
PR	PAIR
PRCST	PRECAST
PREFAB	PREFABRICATE(D)
PREFIN	PREFINISHED
PREFMD	PREFORMED
PRKG	PARKING
PRML	PREMOLDED
PROJ	PROJECT
PROP	PROPERTY
PSCONC	PRESTRESSED CONCRETE
PT	POINT
PTCONC	POST TENSIONED CONCRETE
PTD	PAPER TOWEL DISPENSER
PTN	PARTITION
PTR	PAPER TOWEL RECEPTOR
PVC	POLYVINYL CHLORIDE
PVG	PAVE(D), (ING)
PVMT	PAVEMENT

QT	QUARRY TILE
QTB	QUARRY TILE BASE
QTF	QUARRY TILE FLOOR
QTR	QUARTER
QTY	QUANTITY

R	RISER
RA	RETURN AIR
RAB	RABBET
RAD	RADIUS
RB	RESILIENT BASE
RBR	RUBBER
RCP	REINFORCED CONCRETE PIPE
RCVR	RECEIVER
RD	ROOF DRAIN
RDGINS	RIGID INSULATION
RDWY	ROADWAY
REBAR	REINFORCING STEEL BARS
REC	RECESSED
RECT	RETANGULAR
REF	REFERENCE
REFL	REFLECT(ED), (IVE), (OR)
REFR	REFRIGERATOR
REG	REGISTER
REINF	REINFORCE(D), (ING), (MENT)
REM	REMOVE(ABLE)
REP	REPAIR
REPL	REPLACE
REQD	REQUIRED
RESIL	RESILIENT
RET	RETURN
REV	REVISION(S), REVISED
RF	RESILIENT FLOORING
RFG	ROOFING
RFH	ROOF HATCH
RH	RIGHT HAND
RHMS	ROUND HEAD MACHINE SCREW
RHR	RIGHT HAND REVERSE
RHWS	ROUND HEAD WOOD SCREW
RL	ROOF LEADER
RLG	RAILING
RM	ROOM
RND	ROUND
RO	ROUGH OPENING
ROW	RIGHT OF WAY
RS	ROUGH SAWN
RTF	RUBBER TILE FLOORING
RTU	ROOF TOP UNIT
RV	ROOF VENT
RVL	REVEAL
RVS	REVERSE (SIDE)
RVT	RIVET(ED)
RWD	REDWOOD
RWL	RAIN WATER LEADER

S	SOUTH
S2S	SURFACED TWO SIDES
S4S	SURFACED FOUR SIDES
SA	SUPPLY AIR
SALV	SALVAGE
SAT	SUSPENDED ACOUSTICAL TILE
SB	SPLASH BLOCK
SBSTR	SUBSTRATE
SC	SOLID CORE
SCD	SEAT COVER DISPENSER
SCHED	SCHEDULE
SCP	SCUPPER
SCRN	SCREEN
SD	STORM DRAIN
SDBL	SANDBLAST
SECT	SECTION
SGL	SINGLE
SHR	SHOWER
SHT	SHEET(ING)
SHTHG	SHEATHING
SHV	SHELVES (ING)
SIM	SIMILAR
SKLT	SKYLIGHT
SLD	SEALED
SLDG	SLIDE (ING)
SLDR	SOLDER
SLNT	SEALANT
SLV	SLEEVE
SMACNA	SHEET METAL AND AIR CONDITIONING CONTRACTORS NATIONAL ASSOCIATION
SMLS	SEAMLESS
SND	SANITARY NAPKIN DISPENSER
SNDINS	SOUND INSULATION
SNDU	SANITARY NAPKIN DISPOSAL UNIT
SNT	SEALANT
SPC	SUSPENDED PLASTER CEILING
SPD	SOAP DISPENSER
SPEC	SPECIFICATION(S) (ED)
SPRT	SUPPORT
SQ	SQUARE
SSK	SERVICE SINK
SST	STAINLESS STEEL
STA	STATION
STAG	STAGGERED
STC	SOUND TRANSMISSION CLASS
STD	STANDARD
STG	SEATING
STIF	STIFFENER
STIR	STIRRUP
STL	STEEL
STOR	STORAGE
STR	STRAIGHT
ST	STREET
STRCT	STRUCTURAL
STU	STRUCT
SUSP	SUSPENDED
SV	SHEET VINYL
SYMM	SYMMETRICAL
SYNTH	SYNTHETIC
SYS	SYSTEM

T	TREAD
T & B	TOP AND BOTTOM
TB	THRU BOLT
TBE	THREADED BOTH ENDS
TBM	TEMPORARY BENCH MARK
TD	TOWEL DISPENSER
TDR	TOWEL DISPENSER/ RECEPTACLE
TEL	TELEPHONE
TEMP	TEMPORARY
TER	TERRAZZO
TFA	TO FLOOR ABOVE
TFB	TO FLOOR BELOW
T & G	TONGUE & GROOVE
THD	THREAD(ED)
THERM	THERMAL
THK	THICK(NESS)
THRES	THRESHOLD
TKBD	TACKBOARD
TMPD	TEMPERED
TOB	TOP OF BEAM
TOC	TOP OF CURB
TOF	TOP OF FOOTING
TOFF	TOP OF FINISH FLOOR
TOJ	TOP OF JOIST
TOL	TOLERANCE
TOM	TOP OF MASONRY
TOP	TOP OF PARAPET
TOPV	TOP OF PAVEMENT
TOS	TOP OF SHEATHING
TOSL	TOP OF SLAB
TOST	TOP OF STEEL
TOW	TOP OF WALL
TPD	TOILET PAPER DISPENSER
TPTN	TOILET PARTITION
TS	TUBE STEEL
TWLB	TOWEL BAR
TV	TELEVISION
TYP	TYPICAL

UC	UNDERCUT
UGND	UNDERGROUND
UL	UNDERWRITERS LABORATORY
UNFIN	UNFINISHED
UON	UNLESS OTHERWISE NOTED
UR	URINAL
VAR	VARIES
VB	VINYL BASE
VCT	VINYL COMPOSITION TILE
VERT	VERTICAL
VEST	VESTIBULE
VFAT	VINYL FACED ACOUSTIC TILE
VIF	VERIFY IN FIELD
VJ	V-JOINT(ED)
VNR	VENEER
VR	VAPOR RETARDER
VTR	VENT THROUGH ROOF
VWC	VINYL WALL COVERING

W/	WITH
W/W	WALL TO WALL
W/O	WITHOUT
W	WEST
WBL	WOOD BLOCKING
WC	WATER CLOSET
WD	WOOD
WDP	WOOD PANELING
WDW	WINDOW
WF	WIDE FLANGE
WFS	WOOD FURRING STRIP
WGL	WIRED GLASS
WH	WALL HUNG
WI	WROUGHT IRON
WID	WIDTH, WIDE
WLD	WELD(ED)
WM	WIRE MESH
WP	WATERPROOF(ING)
WPT	WORKING POINT
WR	WIRE ROPE
WS	WOOD SCREW
WSCT	WAINSCOT
WT	WEIGHT
WWF	WELDED WIRE FABRIC

XBRACE	CROSS BRACE
XFMR	TRANSFORMER
XSECT	CROSS SECTION

YCO	YARD CLEANOUT
YD	YARD

GOVERNING AGENCIES

DIVISION OF THE STATE ARCHITECT
STRUCTURAL SAFETY SECTION (DSA/SSS)
700 NORTH ALAMEDA STREET, SUITE 5-500
LOS ANGELES, CALIFORNIA 90012
(213) 897-3995

DIVISION OF THE STATE ARCHITECT
FIRE AND LIFE SAFETY SECTION (DSA/FLS)
700 NORTH ALAMEDA STREET, SUITE 5-500
LOS ANGELES, CALIFORNIA 90013
(213) 897-3995

GOVERNING CODES

2016 CALIFORNIA BUILDING STANDARDS ADMINISTRATIVE CODE
CALIFORNIA CODE OF REGULATIONS
(CCR) TITLE 24, PART 1

2016 CALIFORNIA BUILDING CODE (CBC)
CALIFORNIA CODE OF REGULATIONS
(CCR) TITLE 24, PART 2
(2015 INTERNATIONAL BUILDING CODE (IBC) W/ CALIFORNIA AMENDMENTS)

2016 CALIFORNIA ELECTRICAL CODE (CEC)
CALIFORNIA CODE OF REGULATIONS
(CCR) TITLE 24, PART 3
(2014 NATIONAL ELECTRIC CODE (NEC) W/ CALIFORNIA AMENDMENTS)

2016 CALIFORNIA MECHANICAL CODE (CMC)
CALIFORNIA CODE OF REGULATIONS
(CCR) TITLE 24, PART 4
(2015 UNIFORM MECHANICAL CODE (UMC) W/ CALIFORNIA AMENDMENTS)

2016 CALIFORNIA PLUMBING CODE (CPC)
CALIFORNIA CODE OF REGULATIONS
(CCR) TITLE 24, PART 5
(2015 UNIFORM PLUMBING CODE (UPC) W/ CALIFORNIA AMENDMENTS)

2016 CALIFORNIA ENERGY CODE
CALIFORNIA CODE OF REGULATIONS
(CCR) TITLE 24, PART 6

2016 CALIFORNIA HISTORICAL BUILDING CODE
CALIFORNIA CODE OF REGULATIONS
(CCR) TITLE 24, PART 8

2016 CALIFORNIA FIRE CODE (CFC)
CALIFORNIA CODE OF REGULATIONS
(CCR) TITLE 24, PART 9
(2015 INTERNATIONAL FIRE CODE (IFC) W/ CALIFORNIA AMENDMENTS)

2016 CALIFORNIA EXISTING BUILDING CODE
CALIFORNIA CODE OF REGULATIONS
(CCR) TITLE 24, PART 10
(2015 INTERNATIONAL EXISTING BUILDING CODE (IEBC) W/ CALIFORNIA AMENDMENTS)

2016 CALIFORNIA GREEN BUILDING STANDARDS CODE (CAL GREEN)
CALIFORNIA CODE OF REGULATIONS
(CCR) TITLE 24, PART 11

2016 CALIFORNIA REFERENCED STANDARDS CODE -CALIFORNIA CODE OF REGULATIONS
(CCR) TITLE 24, PART 12
1990 STATE FIRE MARSHAL REGULATIONS (AS AMENDED TO DATE) CALIFORNIA CODE OF REGULATIONS (CCR) TITLE 19

CALIFORNIA ELEVATOR SAFETY CODE, CALIFORNIA CODE OF REGULATIONS (CCR) TITLE 8
(AS AMENDED TO DATE)

2010 AMERICANS WITH DISABILITY ACT (ADA) STANDARDS FOR ACCESSIBLE DESIGN (ADAS)

APPLICABLE NFPA , UL AND ICC STANDARDS

NFPA 13	-	AUTOMATIC SPRINKLER SYSTEMS, 2016 EDITION
NFPA 14	-	STANDPIPE SYSTEMS, 2013 EDITION
NFPA 17	-	DRY CHEMICAL EXTINGUISHING SYSTEMS, 2013 EDITION
NFPA 17A	-	WET CHEMICAL SYSTEMS, 2013 EDITION
NFPA 20	-	STATIONARY PUMPS, 2016 EDITION
NFPA 22	-	WATER TANKS FOR PRIVATE FIRE PROTECTION, 2013 EDITION
NFPA 24	-	PRIVATE FIRE MAINS, 2016 EDITION
NFPA 25	-	WATER BASED FIRE PROTECTION SYSTEMS, 2013 EDITION
NFPA 72	-	NATIONAL FIRE ALARM CODE, 2016 EDITION
NFPA 80	-	FIRE DOORS AND OTHER OPENING PROTECTIVES, 2016 EDITION
NFPA 92	-	STANDARD FOR SMOKE CONTROL SYSTEMS, 2015 EDITION
NFPA 253	-	CRITICAL RADIANT FLUX OF FLOOR COVERINGS, 2015 EDITION
NFPA 2001	-	CLEAN AGENT FIRE EXTINGUISHING SYSTEMS, 2015 EDITION
ICC 300	-	ICC STANDARDS FOR BLEACHERS, FOLDING AND TELESCOPIC SEATING, AND GRANDSTANDS, 2012 EDITION
UL 300	-	FIRE TESTING OF FIRE EXTINGUISHING SYSTEMS FOR PROTECTION OF COMMERCIAL RESTAURANT COOKING AREAS, 2005 EDITION
UL 464	-	AUDIBLE SIGNAL APPLIANCES, 2003 EDITION
UL 521	-	HEAT DETECTORS FOR FIRE PROTECTIVE SIGNALING SYSTEMS, 1999 EDITION

NOTE: ALL NFPA STANDARDS AS LISTED ARE TO CONFORM TO THE EDITION AS LISTED WITH THE LATEST CALIFORNIA AMENDMENTS. REFERENCE THE 2016 CBC, TITLE 24, PART 2 - CHAPTER 35 FOR ADDITIONAL APPLICABLE NFPA, UL. STANDARDS AND ANY CALIFORNIA AMENDMENTS TO NFPA STANDARDS.

ARCHITECTS
WLC
CLIENT FOCUSED • PASSION DRIVEN

SOUTHERN CALIFORNIA
8163 ROCHESTER AVENUE, SUITE 100
RANCHO CUCAMONGA
CALIFORNIA 91730-0729

TEL: 909-987-0909
www.wlcarchitects.com

LONGFELLOW ELEMENTARY SCHOOL
HVAC REPLACEMENT
COMPTON UNIFIED SCHOOL DISTRICT
1101 S DWIGHT AVE.
COMPTON, CA 90220

LICENSED ARCHITECT
MARK GRAHAM
C-26046
03-31-19
STATE OF CALIFORNIA

CONSULTANT

IDENTIFICATION STAMP
DSA, OF THE STATE ARCHITECT
OFFICE OF REGULATION SERVICES
APPL 03-118423
AC FLS SS EY
DATE MAR 0 6 2018
FILE: 19-23

NO	DATE	BY	DESCRIPTION
1			REVISIONS

DRAWN:	CHECKED:
DATE: 3/6/2018	SCALE:
PROJECT NUMBER: 1723400	

ARCH DWGS ABBREVIATIONS & GOVERNING CODE

DRAWING NUMBER: A0.2

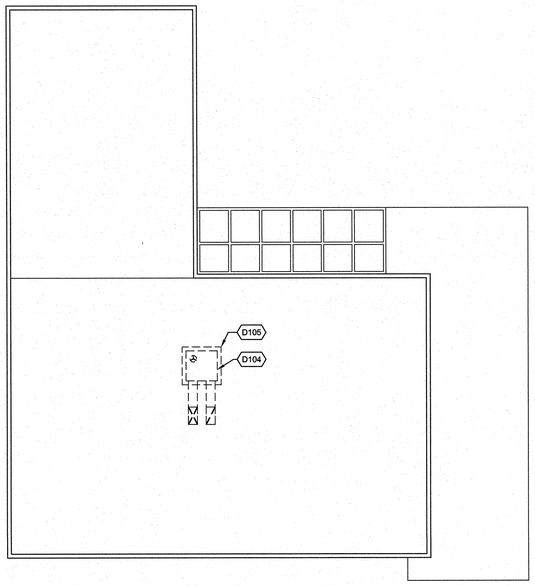

NORTH

BUILDING A - DEMO ROOF PLAN | 1/8" = 1'-0" | 2

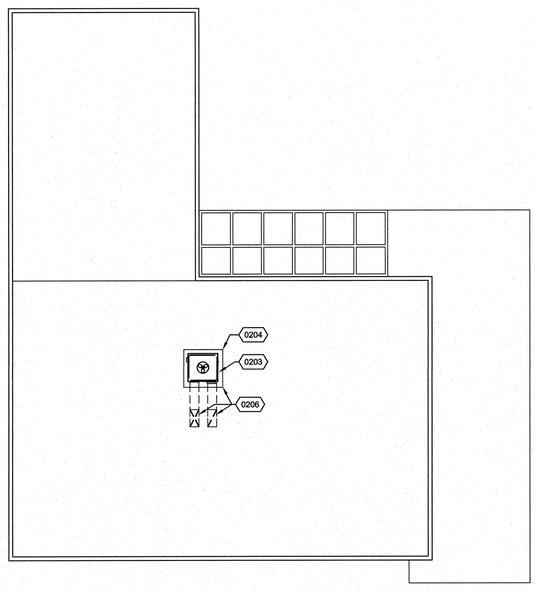

NORTH

BUILDING A - NEW ROOF PLAN | 1/8" = 1'-0" | 3

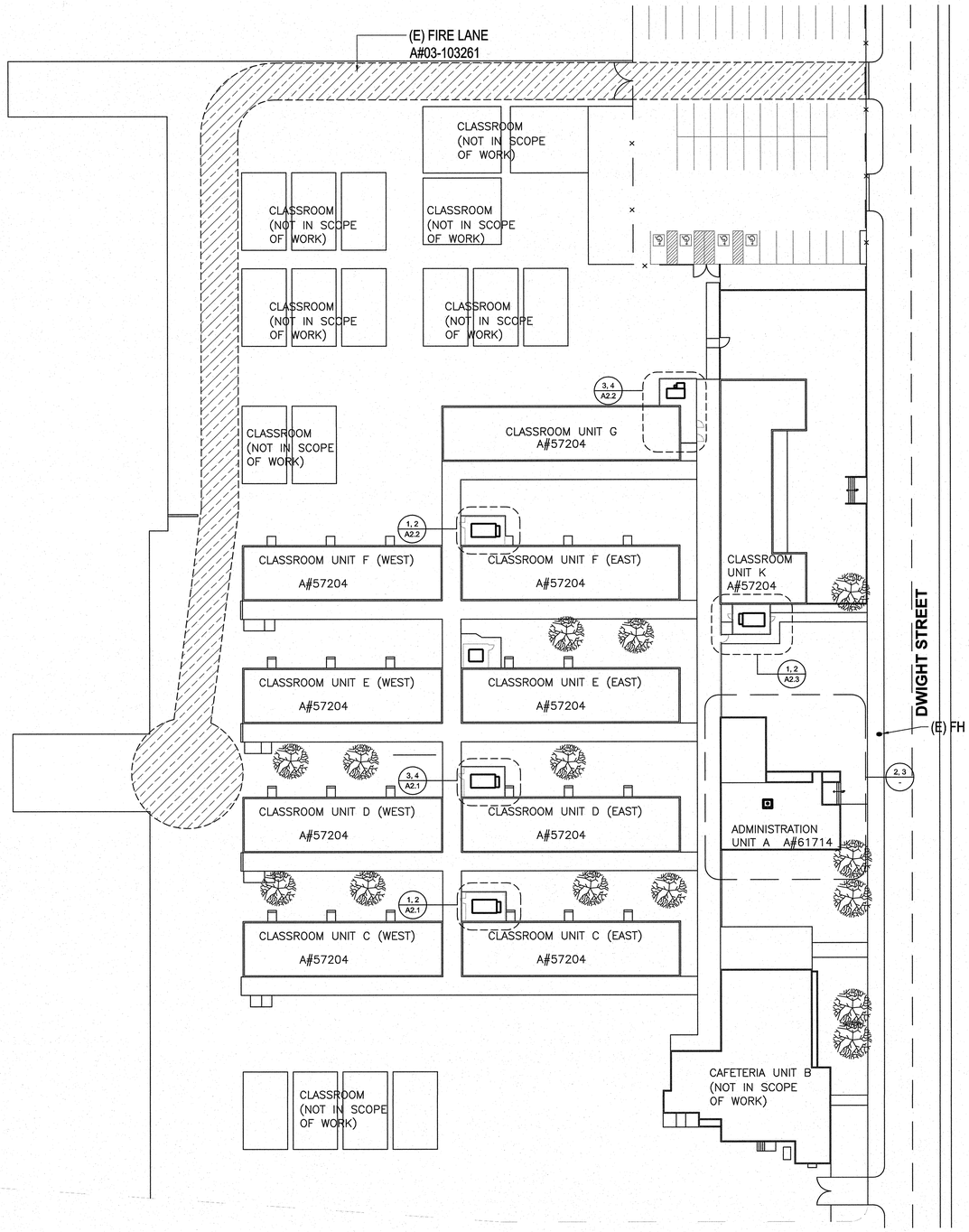

NORTH

SITE PLAN | 1" = 30'-0" | 1

-

D104 (E) HVAC UNIT TO BE REMOVED

D105 REMOVE (E) COUNTER FLASHING

0203 (N) HVAC UNIT, REF TO MECH DWGS.

0204 (N) 20 GA SHEET METAL COUNTER FLASHING, PAINTED

0206 PATCH ROOFING AT ROOF OPENING AND PLATFORM TO MATCH EXISTING ROOFING.

REFERENCE NOTES

BUILDING DATA

BUILDING	OCCU TYPE	CONSTR TYPE	AREA
A	B	TYPE V-B	3,194 SF
C	E	TYPE V-B	7,080 SF
D	E	TYPE V-B	7,080 SF
E	E	TYPE V-B	7,080 SF
F	E	TYPE V-B	7,080 SF
G	E	TYPE V-B	3,840 SF
K	E	TYPE V-B	4,462 SF

WLC ARCHITECTS
CLIENT FOCUSED • PASSION DRIVEN

SOUTHERN CALIFORNIA
8163 ROCHESTER AVENUE, SUITE 100
RANCHO CUCAMONGA
CALIFORNIA 91730-0729

TEL: 909-987-0909

www.wlcarchitects.com

LONGFELLOW ELEMENTARY SCHOOL HVAC REPLACEMENT

COMPTON UNIFIED SCHOOL DISTRICT

1101 S DWIGHT AVE.
COMPTON, CA 90220

LICENSED ARCHITECT
MARK GRAHAM
C-26046
03-31-19
STATE OF CALIFORNIA

CONSULTANT

IDENTIFICATION STAMP
DIV. OF THE STATE ARCHITECT
OFFICE OF REGULATION SERVICES
APPL 03-118423
AC — FLS — SS —
DATE MAR 0 6 2018
FILE: 19-23

NO	DATE	BY	DESCRIPTION
1			REVISIONS

DRAWN: CTW | CHECKED:
DATE: 3/6/2018 | SCALE:
PROJECT NUMBER: 1723400

SITE PLAN AND BUILDING A DEMO & NEW ROOF PLANS

DRAWING NUMBER: A1.0

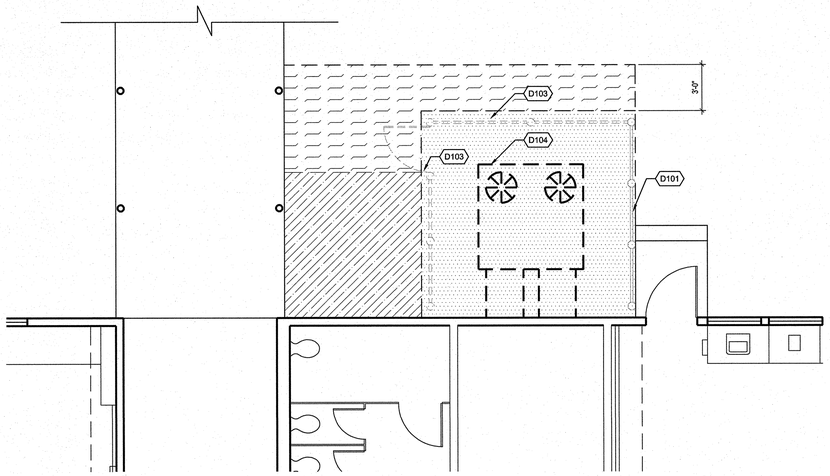

NORTH

BUILDING D - ENLARGED DEMO FLOOR PLAN | 1/4" = 1'-0" | 3

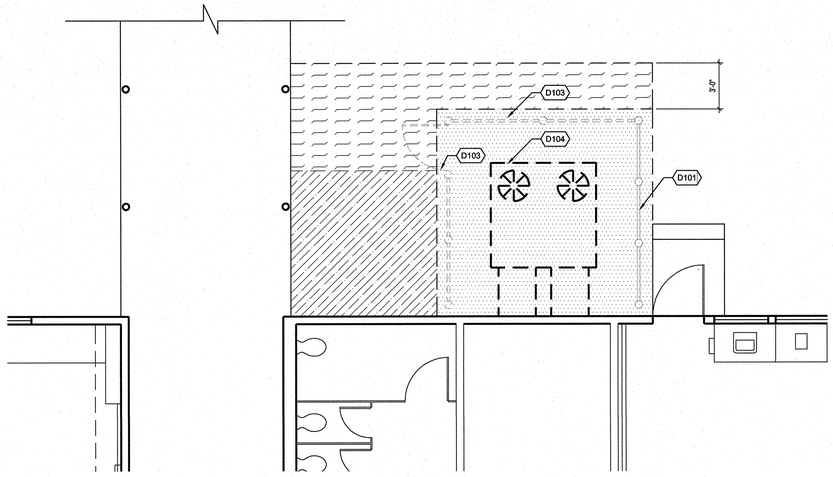

NORTH

BUILDING C - ENLARGED DEMO FLOOR PLAN | 1/4" = 1'-0" | 1

D101 (E) CHAIN LINK FENCE TO REMAIN.

D102 (E) CHAIN LINK GATE TO REMAIN.

D103 (E) CHAIN LINK FENCE, GATE, AND POST TO BE REMOVED AND AND PROTECTED FOR REINSTALLATION, TYP.

D104 (E) HVAC UNIT TO BE REMOVED

0201 RINSTALL (E) CHAIN LINK FENCE/GATE, REF TO DTL 6/A2.3

0202 (N) CHAIN LINK FENCE TO MATCH (E), REF TO DTL 6/A2.3

0203 (N) HVAC UNIT, REF TO MECH DWGS.

0205 (N) DUCT WORK, REF TO MECH DWGS.

REFERENCE NOTES

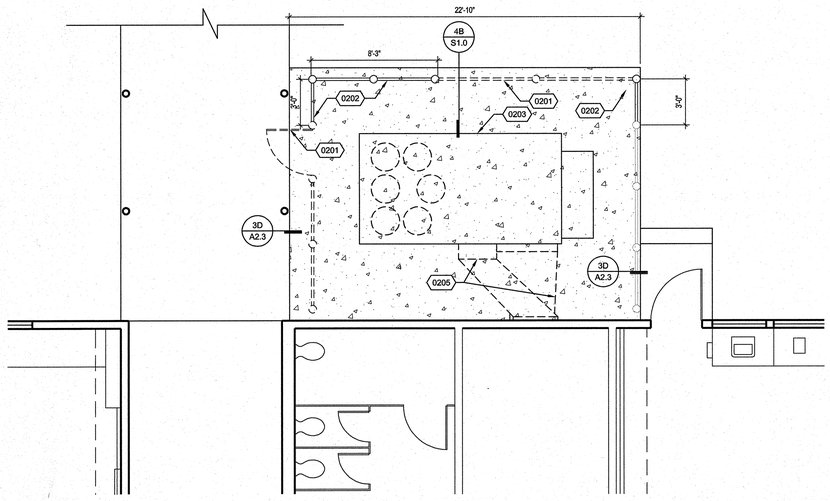

NORTH

BUILDING D - ENLARGED NEW FLOOR PLAN | 1/4" = 1'-0" | 4

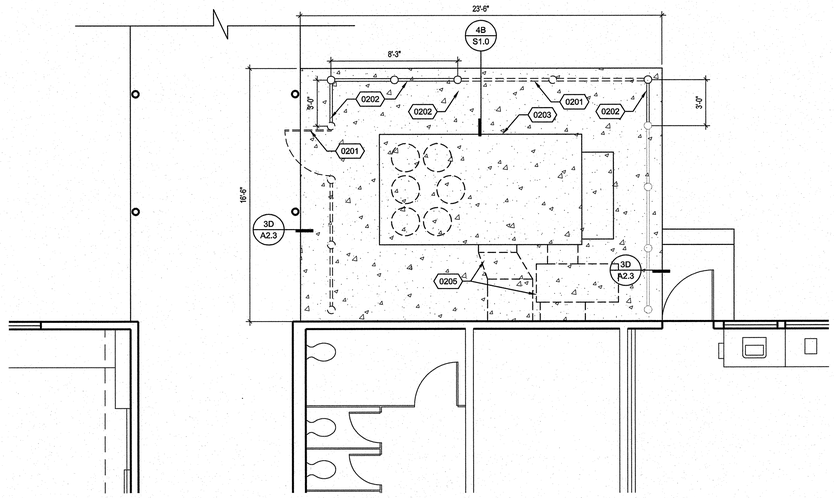

NORTH

BUILDING C - ENLARGED NEW FLOOR PLAN | 1/4" = 1'-0" | 2

DEMOLISH (E) AC PAVING

DEMOLISH (E) CONCRETE PAD

DEMOLISH (E) TURF

(N) CONCRETE PAD, REF TO DTL 3/A2.3

LEGEND

ARCHITECTS
WLC
CLIENT FOCUSED • PASSION DRIVEN

SOUTHERN CALIFORNIA
8163 ROCHESTER AVENUE, SUITE 100
RANCHO CUCAMONGA
CALIFORNIA 91730-0729

TEL: 909-987-0909

www.wlcarchitects.com

LONGFELLOW ELEMENTARY SCHOOL HVAC REPLACEMENT

COMPTON UNIFIED SCHOOL DISTRICT

1101 S DWIGHT AVE.
COMPTON, CA 90220

LICENSED ARCHITECT
MARK GRAHAM
C-26046
03-31-19
STATE OF CALIFORNIA

CONSULTANT

IDENTIFICATION STAMP
DSA / OF THE STATE ARCHITECT
OFFICE OF REGULATION SERVICES
APPL 03-118423
FILE: 19-23
AC — FLS — SS
DATE MAR 07 2018

NO	DATE	BY	DESCRIPTION
1			REVISIONS

DRAWN: CTW	CHECKED:
DATE: 3/6/2018	SCALE:
PROJECT NUMBER: 1723400	

BUILDING C & D ENLARGED DEMO & NEW FLOOR PLANS

DRAWING NUMBER: A2.1

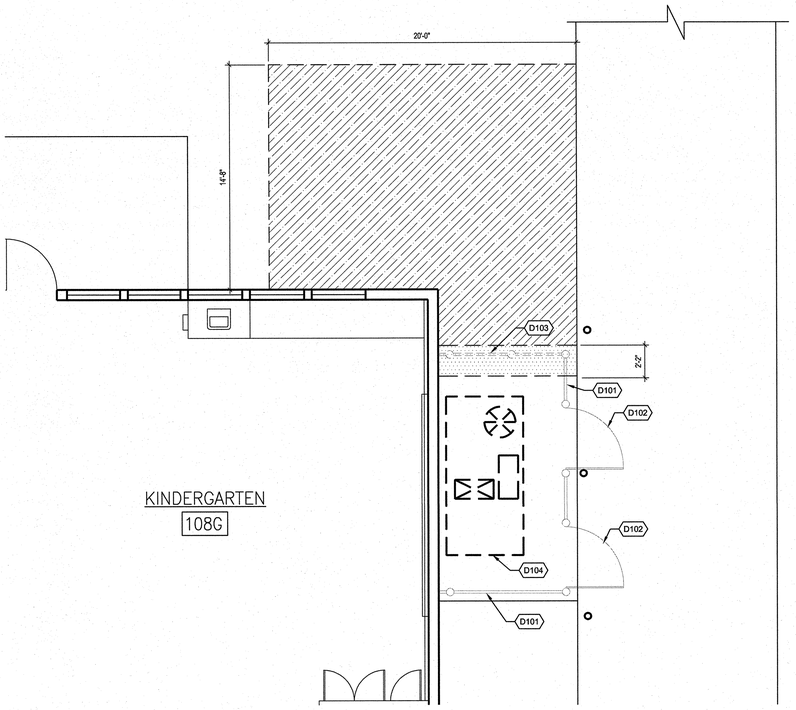

BUILDING G - ENLARGED DEMO FLOOR PLAN | 1/4" = 1'-0" | 3

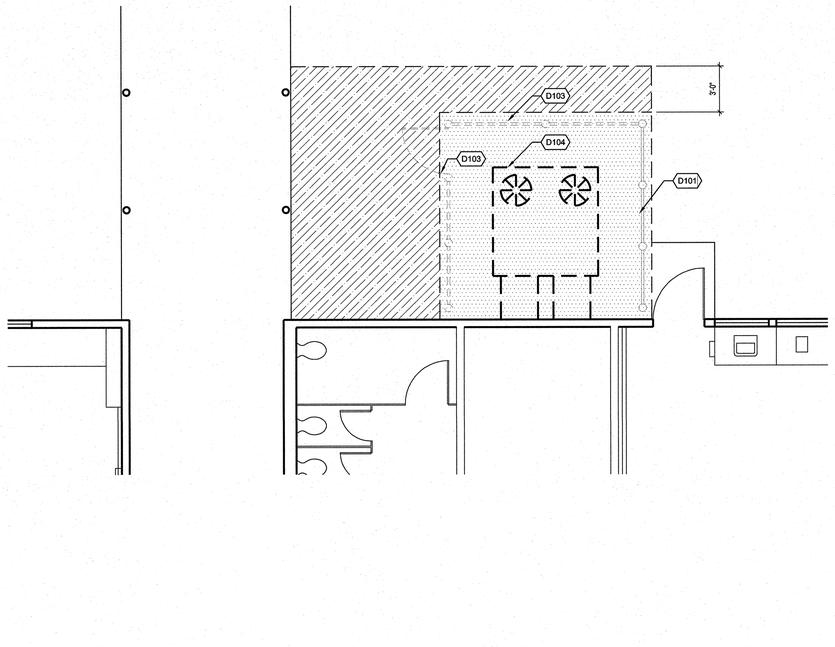

BUILDING F - ENLARGED DEMO FLOOR PLAN | 1/4" = 1'-0" | 1

D101 (E) CHAIN LINK FENCE TO REMAIN.

D102 (E) CHAIN LINK GATE TO REMAIN.

D103 (E) CHAIN LINK FENCE, GATE, AND POST TO BE REMOVED AND AND PROTECTED FOR REINSTALLATION, TYP.

D104 (E) HVAC UNIT TO BE REMOVED

0201 RINSTALL (E) CHAIN LINK FENCE/GATE, REF TO DTL 6/A2.3

0202 (N) CHAIN LINK FENCE TO MATCH (E), REF TO DTL 6/A2.3

0203 (N) HVAC UNIT, REF TO MECH DWGS.

0204 (N) CHAIN LINK FENCE GATE TO MATCH (E), REF TO DTL 7/A2.3

0205 (N) DUCT WORK, REF TO MECH DWGS.

REFERENCE NOTES

DEMOLISH (E) AC PAVING

DEMOLISH (E) CONCRETE PAD

DEMOLISH (E) TURF

(N) CONCRETE PAD, REF TO DTL 3/A2.3

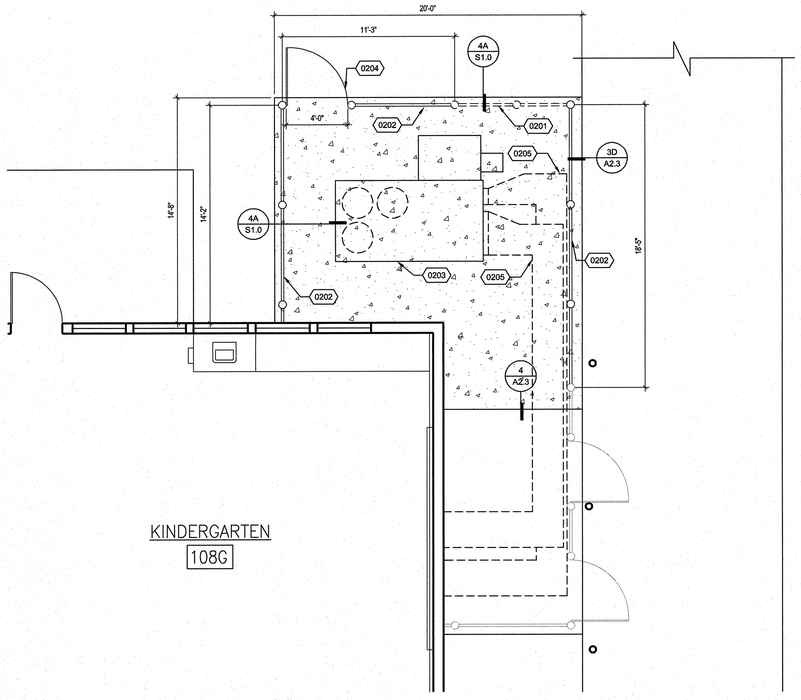

BUILDING G - ENLARGED NEW FLOOR PLAN | 1/4" = 1'-0" | 4

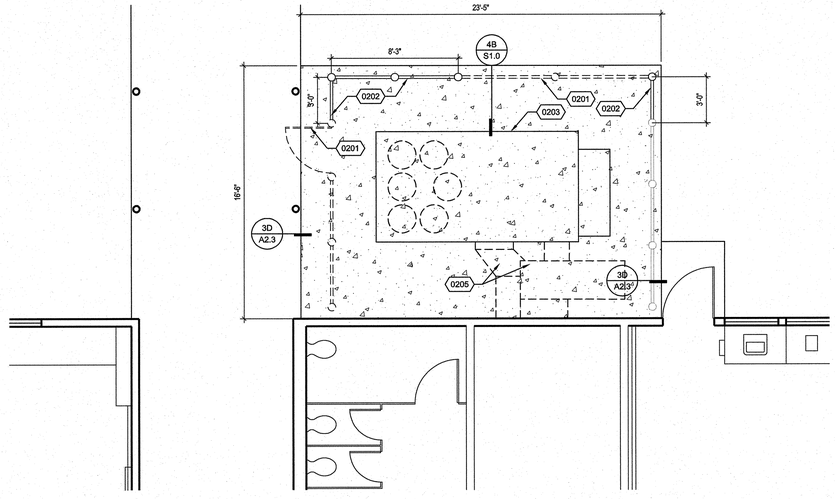

BUILDING F - ENLARGED NEW FLOOR PLAN | 1/4" = 1'-0" | 2

LEGEND

ARCHITECTS
WLC
CLIENT FOCUSED • PASSION DRIVEN

SOUTHERN CALIFORNIA
8163 ROCHESTER AVENUE, SUITE 100
RANCHO CUCAMONGA
CALIFORNIA 91730-0729

TEL: 909-987-0909

www.wlcarchitects.com

LONGFELLOW ELEMENTARY SCHOOL HVAC REPLACEMENT

COMPTON UNIFIED SCHOOL DISTRICT

1101 S DWIGHT AVE.
COMPTON, CA 90220

LICENSED ARCHITECT
MARK GRAHAM
C-28046
03-31-19
STATE OF CALIFORNIA

CONSULTANT

IDENTIFICATION STAMP
DIV. OF THE STATE ARCHITECT
OFFICE OF REGULATION SERVICES
APPL 03-118423
AC FLS SS EV
DATE MAY 0 8 2019
FILE: 19-23

NO	DATE	BY	DESCRIPTION
1			REVISIONS

DRAWN: CTW | CHECKED:
DATE: 3/6/2018 | SCALE:
PROJECT NUMBER: 1723400

BUILDING F & G ENLARGED DEMO & NEW FLOOR PLANS

DRAWING NUMBER: A2.2

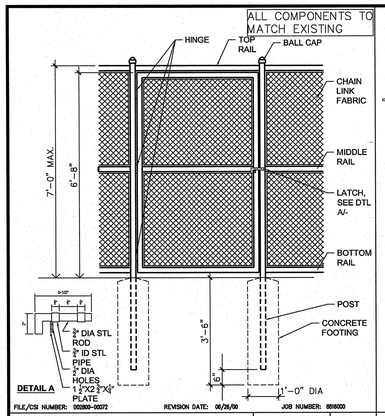

CHAINLINK FENCE GATE | 1/2"=1'-0" | 7

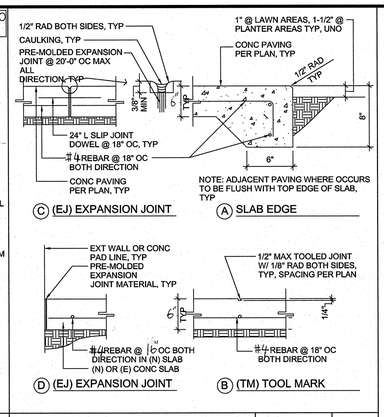

NEW CONC PAVING | 1-1/2" = 1'-0" | 3

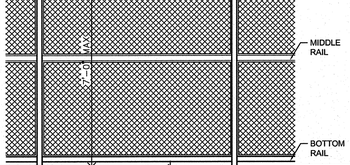

NEW CONC PAVING | 1-1/2" = 1'-0" | 4

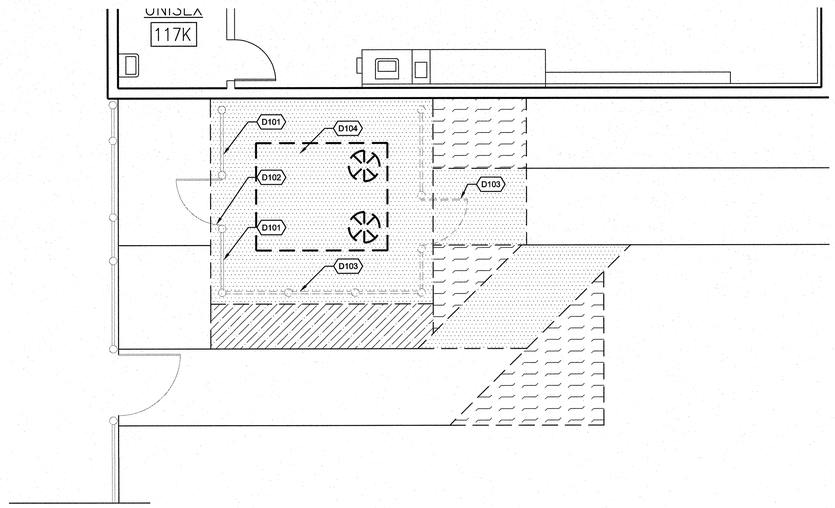

BUILDING K - ENLARGED DEMO FLOOR PLAN | 1/4" = 1'-0" | 1

NORTH

REFERENCE NOTES

- D101 (E) CHAIN LINK FENCE TO REMAIN.
- D102 (E) CHAIN LINK GATE TO REMAIN.
- D103 (E) CHAIN LINK FENCE, GATE, AND POST TO BE REMOVED AND AND PROTECTED FOR REINSTALLATION, TYP.
- D104 (E) HVAC UNIT TO BE REMOVED
- 0201 RINSTALL (E) CHAIN LINK FENCE/GATE, REF TO DTL 6/A2.3
- 0202 (N) CHAIN LINK FENCE TO MATCH (E), REF TO DTL 6/A2.3
- 0203 (N) HVAC UNIT, REF TO MECH DWGS.
- 0205 (N) DUCT WORK, REF TO MECH DWGS.

-	8	NEW CONC PAVING	1-1/2" = 1'-0" | 4

-	9	-	- | 5

-	10	CHAIN LINK FENCE	1/2" = 1'-0" | 6

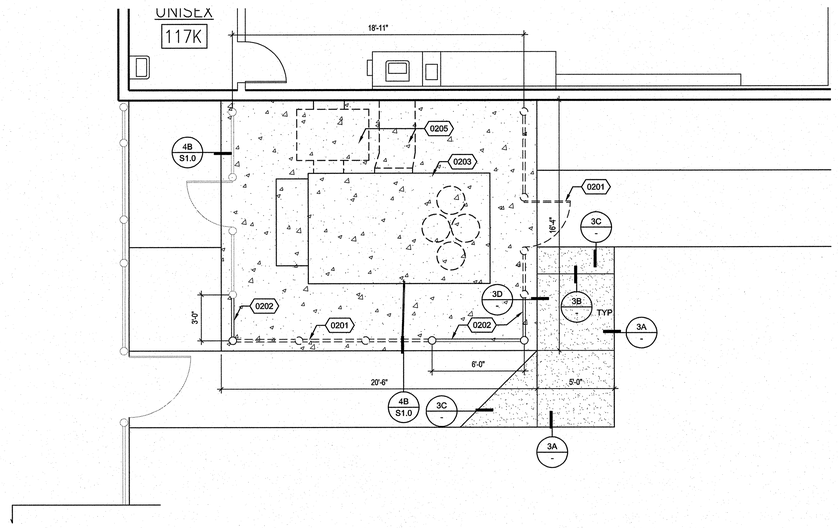

BUILDING K - ENLARGED NEW FLOOR PLAN | 1/4" = 1'-0" | 2

NORTH

LEGEND

- DEMOLISH (E) AC PAVING
- DEMOLISH (E) CONCRETE PAD
- DEMOLISH (E) TURF
- (N) CONCRETE PAD, REF TO DTL 3/A2.3
- (N) CONCRETE PAVING, REF TO DTL 3 & 4/A2.3

ARCHITECTS WLC
CLIENT FOCUSED • PASSION DRIVEN

SOUTHERN CALIFORNIA
8163 ROCHESTER AVENUE, SUITE 100
RANCHO CUCAMONGA
CALIFORNIA 91730-0729
TEL: 909-987-0909
www.wlcarchitects.com

LONGFELLOW ELEMENTARY SCHOOL HVAC REPLACEMENT

COMPTON UNIFIED SCHOOL DISTRICT
1101 S DWIGHT AVE.
COMPTON, CA 90220

LICENSED ARCHITECT MARK GRAHAM C-26046 03-31-19 STATE OF CALIFORNIA

CONSULTANT

IDENTIFICATION STAMP DIV. OF THE STATE ARCHITECT OFFICE OF REGULATION SERVICES
FILE: 19-23
APPL 03-118423
AC FLS SS
DATE MAR 06 2018

NO	DATE	BY	DESCRIPTION
1			REVISIONS

DRAWN: CTW	CHECKED:
DATE: 3/6/2018	SCALE:
PROJECT NUMBER: 1723400	

BLDG K ENLARGED DEMO & NEW FLOOR PLANS AND DETAILS

DRAWING NUMBER: A2.3

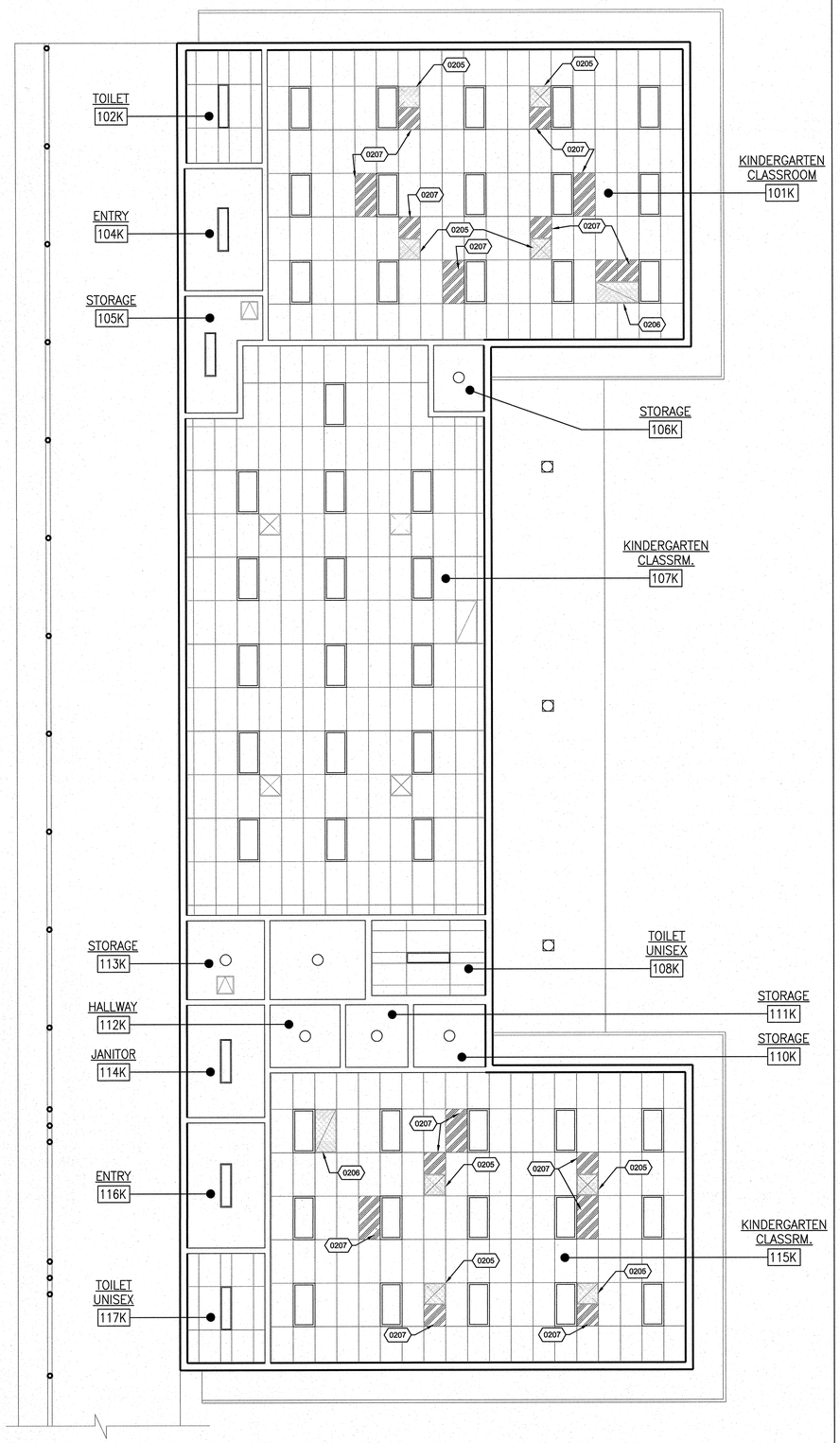

BUILDING K - ENLARGED NEW REFLECTED CEILING PLAN | 3/16" = 1'-0" | 2

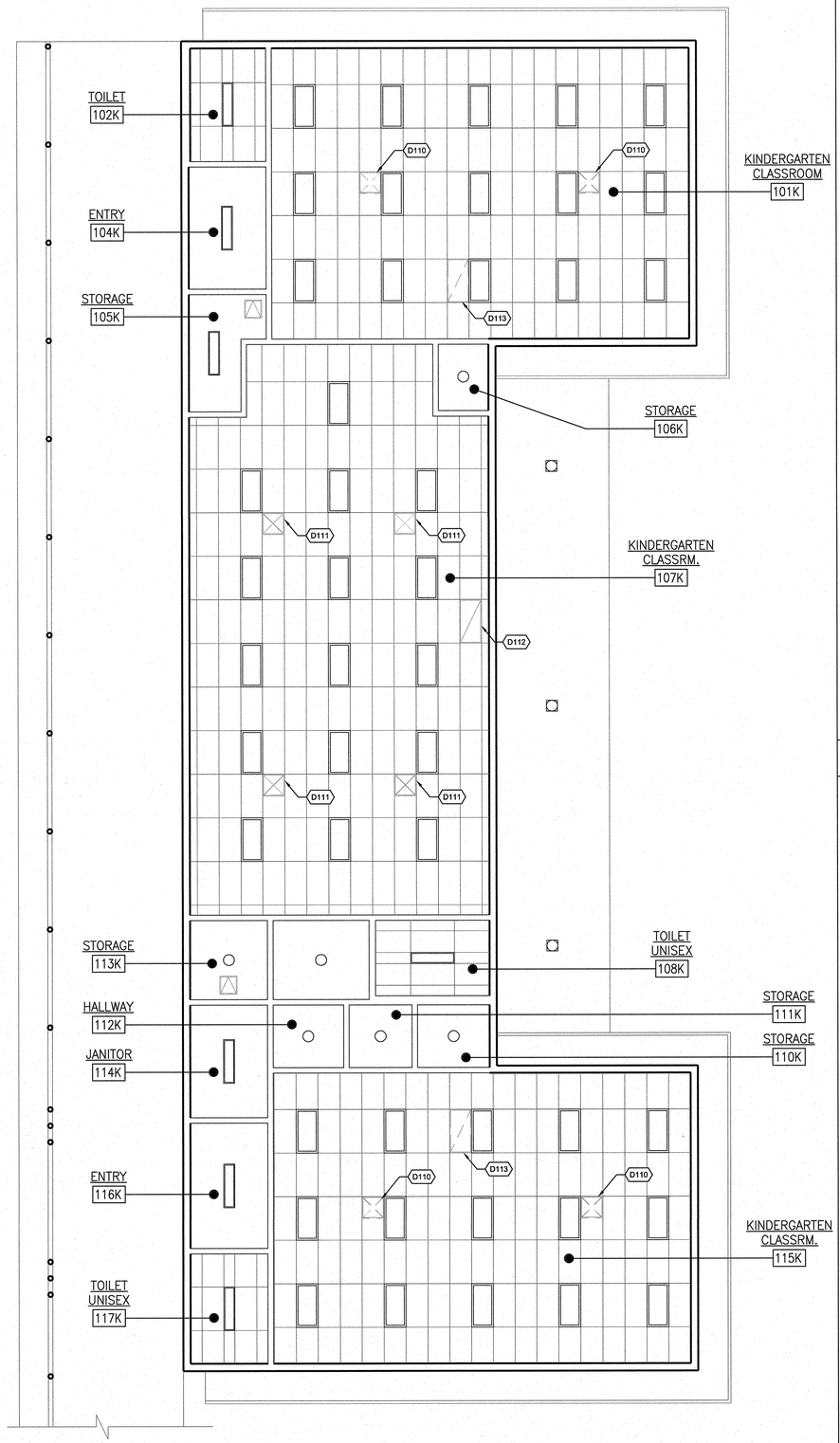

BUILDING K - ENLARGED DEMO REFLECTED CEILING PLAN | 3/16" = 1'-0" | 1

D110 (E) SUPPLY AIR DIFFUSER TO BE REMOVED
D111 (E) SUPPLY AIR DIFFUSER TO REMAIN
D112 (E) RETURN GRILL TO REMAIN
D113 (E) RETURN GRILL TO BE REMOVED
0205 (N) SUPPLY AIR DIFFUSER, REF TO MECH DWGS
0206 (N) RETURN AIR GRILLE, REF TO MECH DWGS
0207 (N) CEILING TILE TO MATCH EXISTING AND MODIFY THE CEILING GRILL TO FIT THE (N) DIFFUSER OR GRILLE

REFERENCE NOTES

1. IT IS THE MECHANICAL CONTRACTOR'S RESPONSE TO MODIFIED THE EXISTING CEILING GRILL AND CEILING TILE TO FIT THE NEW SUPPLY DIFFUSER AND RETURN GRILLE, AND PROVIDE THE NEW CEILING TILE FOR THE REMAIN EXISTING OPENING.

GENERAL NOTES

WLC ARCHITECTS
CLIENT FOCUSED • PASSION DRIVEN
SOUTHERN CALIFORNIA
8163 ROCHESTER AVENUE, SUITE 100
RANCHO CUCAMONGA
CALIFORNIA 91730-0729
TEL: 909-987-0909
www.wlcarchitects.com

LONGFELLOW ELEMENTARY SCHOOL
HVAC REPLACEMENT
COMPTON UNIFIED SCHOOL DISTRICT
1101 S DWIGHT AVE.
COMPTON, CA 90220

LICENSED ARCHITECT
MARK GRAHAM
C-26046
03-31-19
STATE OF CALIFORNIA

CONSULTANT

IDENTIFICATION STAMP
DIV. OF THE STATE ARCHITECT
OFFICE OF REGULATION SERVICES
APPL 03-118423
FILE: 19-23
AC FLS SS EY
DATE MAR 06 2018

NO	DATE	BY	DESCRIPTION
#	REVISIONS		

DRAWN: CTW	CHECKED:
DATE: 3/6/2018	SCALE:
PROJECT NUMBER: 1723400	

BUILDING K ENLARGED DEMO & NEW REFEL CEILING PLANS

DRAWING NUMBER: A3.1

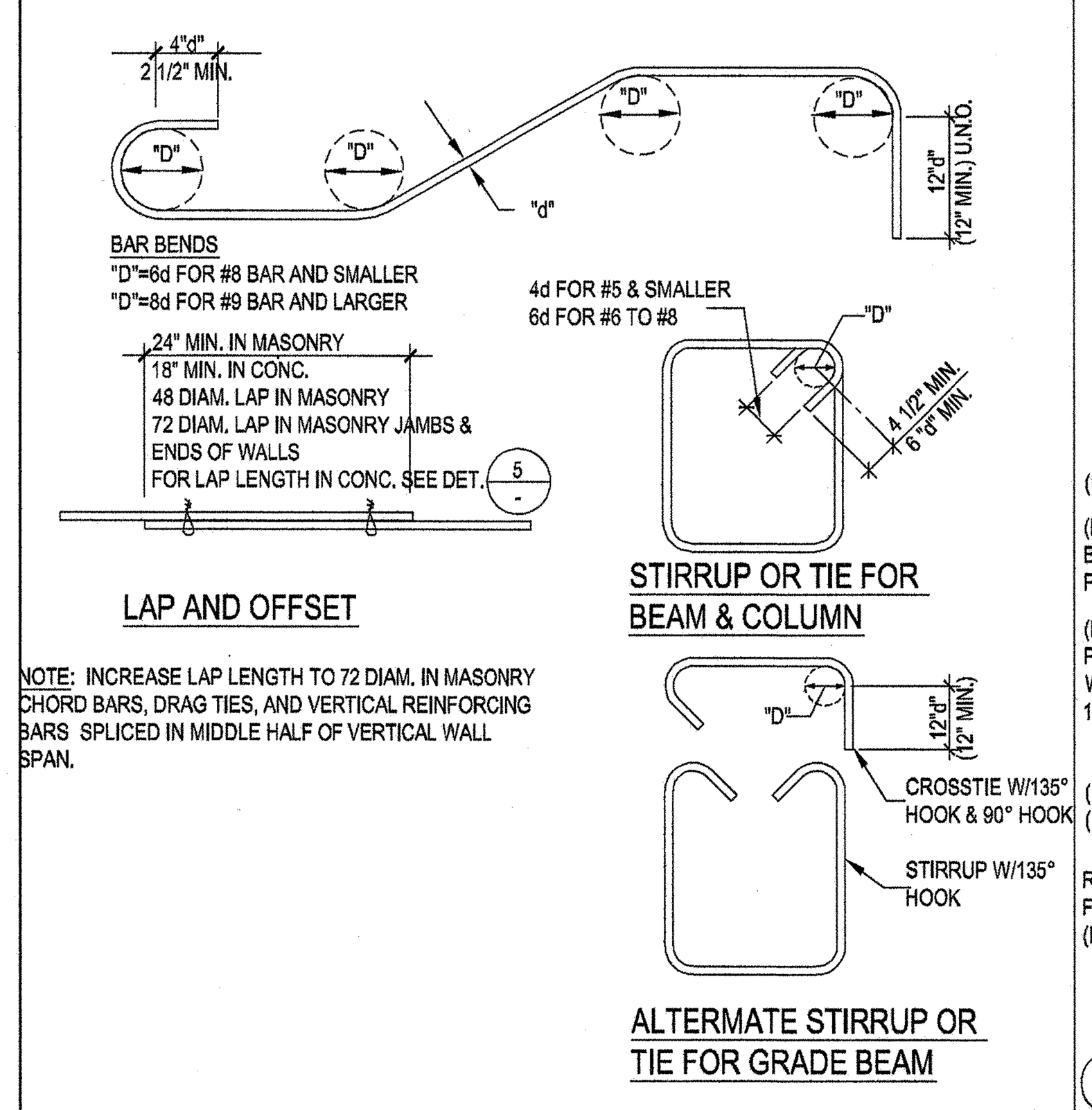

REINFORCING HOOKS AND BENDS — 3/4"=1'-0" — 1

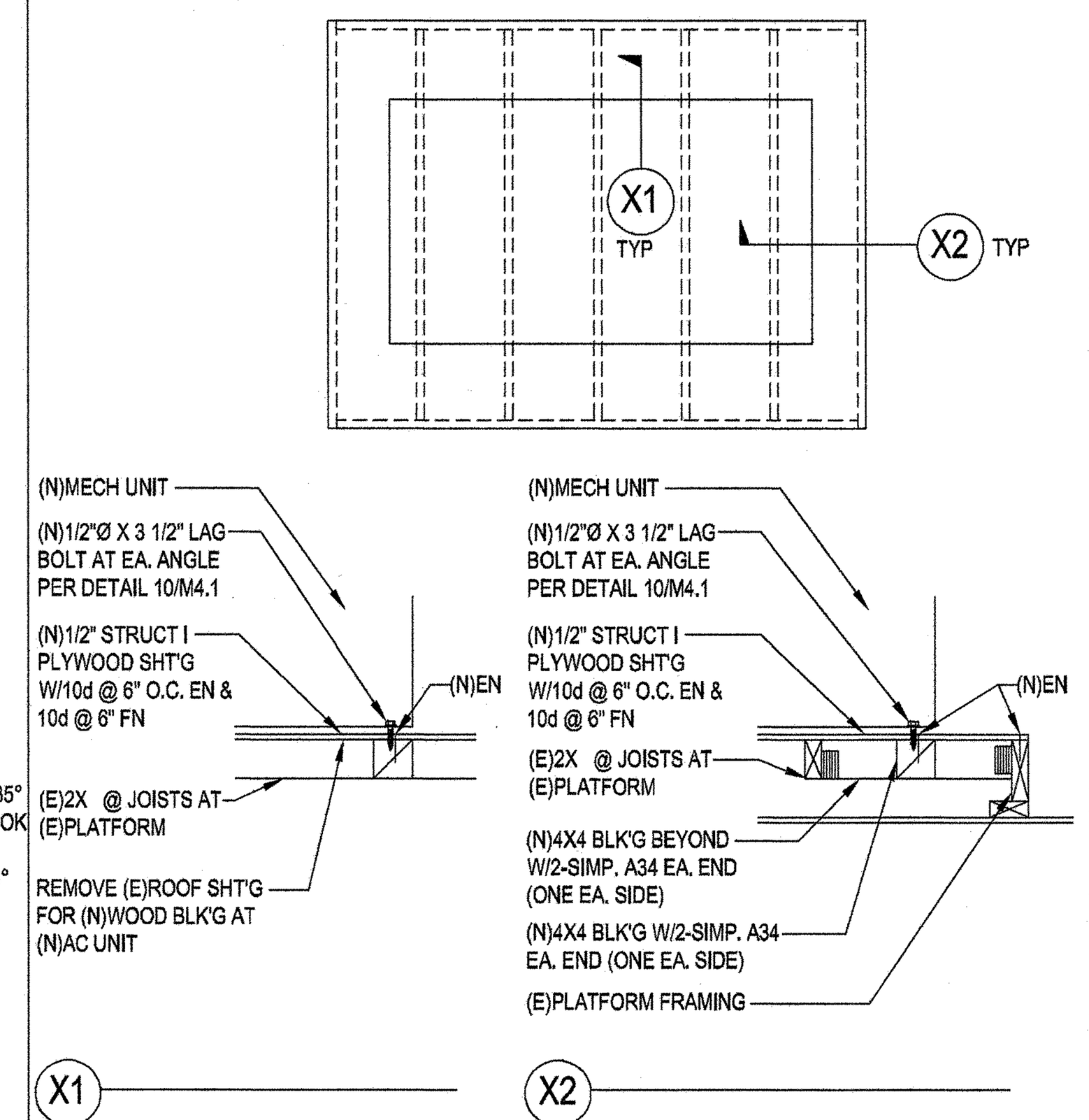

MECH'L PLATFORM — 3/4"=1'-0" — 2

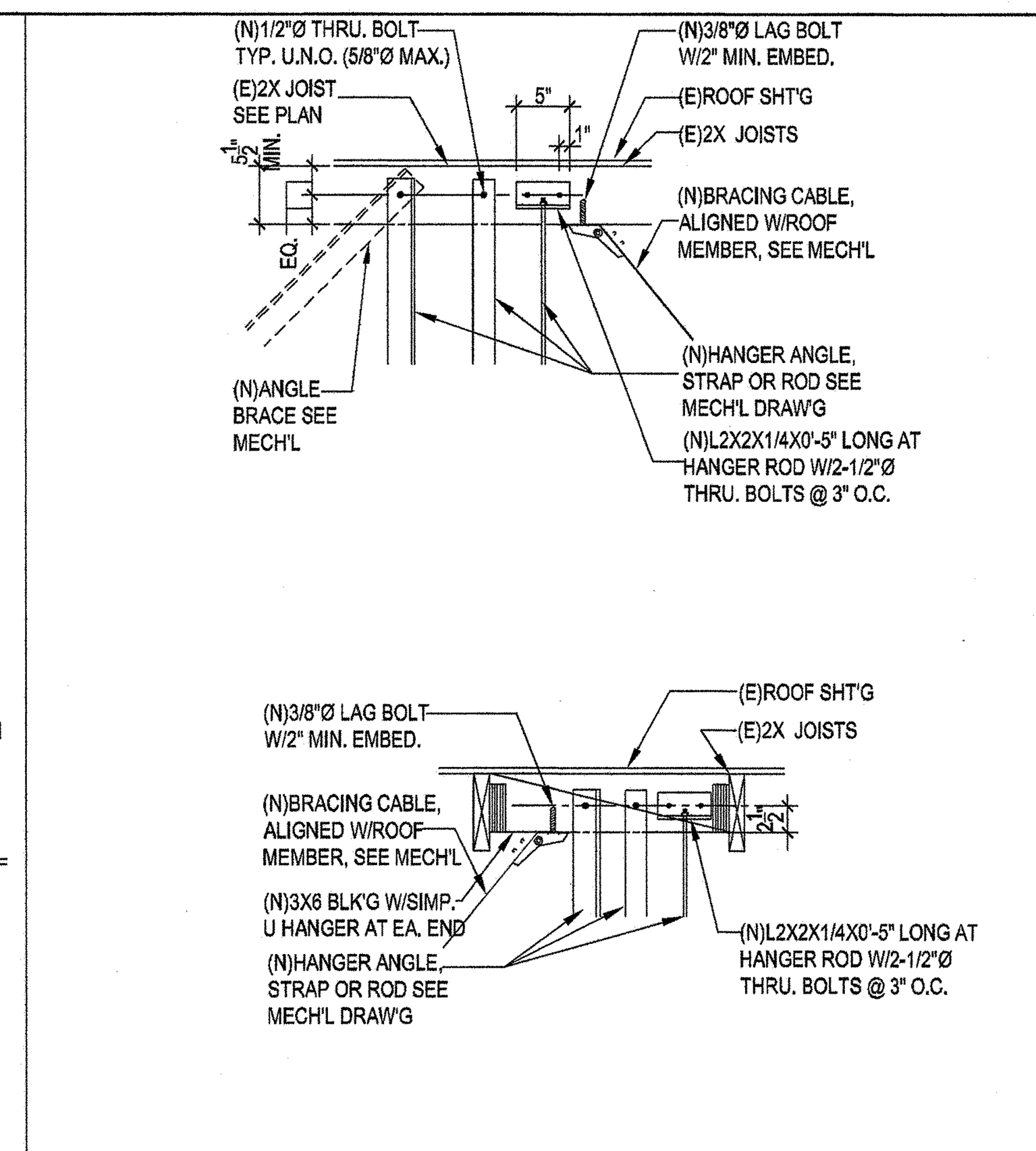

HANGER ANGLE, ROD OR STRAP & BRACE TO (E)ROOF STRUCTURE — 3/4"=1'-0" — 3

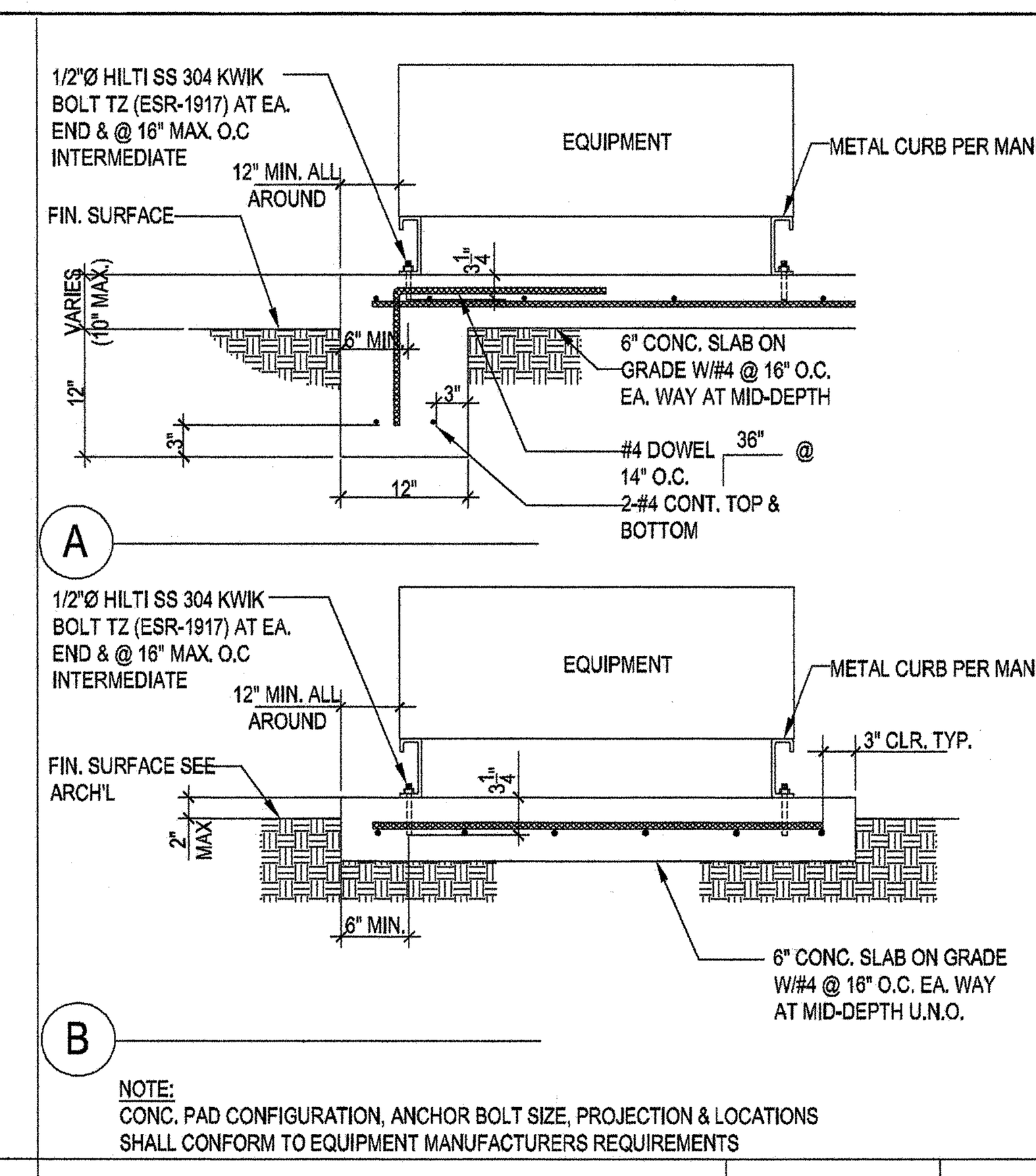

HOUSE KEEPING OR EQUIPMENT PAD — 3/4"=1'-0" — 4

LUMBER

1. ALL STRUCTURAL LUMBER SHALL BE GRADED IN ACCORDANCE WITH THE "GRADING AND DRESSING RULES NO. 16 OF THE WEST COAST LUMBERMAN'S ASSOCIATION."
2. ALL WOOD BEARING ON CONCRETE WITHIN 4'-0" FROM GRADE SHALL BE PRESSURE TREATED DOUGLAS FIR.
3. ALL BOLT HOLES SHALL BE DRILLED 1/32" TO 1/16" OVERSIZED (11.1.2.2, '05 NDS)
4. STRUCTURAL MEMBERS SHALL NOT BE CUT FOR PIPES, ETC. UNLESS SPECIFICALLY NOTED OR DETAILED.
5. PROVIDE 2X SOLID BLOCKING BETWEEN JOISTS OR RAFTERS TO ALL SUPPORTS.
6. PROVIDE SOLID BLOCKING OR CROSS-BRIDGING AT 8'-0" O.C. MAXIMUM FOR ALL FLOOR JOISTS OVER (4") DEEP AND AT 10'0" O.C. MAXIMUM FOR ALL RAFTERS OVER (8") DEEP. LOCATE FIRST BLOCK AT MIDSPAN
7. ALL STRUCTURAL PLYWOOD SHALL BE STRUCTURAL GRADE WITH EXTERIOR GLUE CONFORMING TO PS 1-09.
8. IN HORIZONTAL PLYWOOD SHEATHING, NO PANEL SHALL BE LESS THAN 24 INCHES WIDE. IN VERTICAL PLYWOOD SHEATHING, NO PANEL SHALL BE LESS THAN 12 INCHES WIDE.
9. ALL BOLTS BEARING ON WOOD SHALL HAVE STANDARD CUT WASHERS UNDER HEAD AND NUT, UNLESS NOTED OTHERWISE.
10. ALL JOIST HANGERS SHALL BE "SIMPSON" OR APPROVED EQUAL. AND SHALL MATCH SUPPORTED MEMBER SIZE UNLESS OTHERWISE SHOWN ON DRAWINGS. THEY SHALL BE INSTALLED FOR MAXIMUM RATED LOADS.
11. PROVIDE 2X FIRE STOPS AT ALL INTERSECTIONS OF STUD WALLS AND/OR STUD PARTITIONS AT FLOOR, CEILING AND ROOF. FIRE STOPS AT A MAXIMUM SPACING OF 8'0" O.C. IN THE VERTICAL DIRECTION, PROVIDE 2X FIRE STOPS IN ALL FURRED SPACES, VERTICAL AND HORIZONTAL.
12. ALL STRUCTURAL LUMBER SHALL BE DOUGLAS FIR OF THE FOLLOWING GRADES UNLESS OTHERWISE NOTED:
    STUD, PLATES AND BLOCKING....................NO. 1
    BEAMS AND STRINGERS....................DENSE NO. 1
    POSTS AND MULLIONS....................SEL STRUCT
    JOISTS AND RAFTERS (2X6 AND LARGER)....................NO. 1
    (2X4 AND 3X4)....................NO. 1
    BEAMS (LESS THAN 4" IN WIDTH)....................NO. 1
    PLANK AND DECKING....................SEL COM
    SILL PLATES....................PRESSURE TREATED NO.1 OR BETTER
13. NAILING FOR 5/8" AND 3/4" PLYWOOD SHALL BE 10d PLYWOOD NAILS, 2-1/2" X #9 GAGE X 9/32" DIAMETER HEAD BARBED SHANK, EQUIVALENT.
14. MACHINE APPLIED NAILING: USE OF MACHINE NAILING IS SUBJECT TO A SATISFACTORY JOBSITE DEMONSTRATION FOR EACH PROJECT AND THE APPROVAL BY THE PROJECT ARCHITECT OR STRUCTURAL ENGINEER AND THE DIVISION OF THE STATE ARCHITECT. THE APPROVAL IS SUBJECT TO CONTINUED SATISFACTORY PERFORMANCE. MACHINE NAILING WILL NOT BE APPROVED IN 5/16" PLYWOOD. IF NAILHEADS PENETRATE THE OUTER PLY MORE THAN WOULD BE NORMAL FOR A HAND HAMMER OR IF MINIMUM ALLOWABLE EDGE DISTANCES ARE NOT MAINTAINED, THE PERFORMANCE WILL BE DEEMED UNSATISFACTORY.
15. ALL NAILS SHALL BE COMMON WIRE NAILS.
16. ALL NAILING SHALL COMPLY WITH TABLE 2304.9.1 OF THE 2013 EDITION OF THE C.B.C.
17. ALL LUMBER SHALL HAVE A MAXIMUM MOISTURE CONTENT OF 19 % (DRY) LUMBER
18. WHERE JOISTS ARE SUPPORTING MECHANICAL EQUIPMENT AND ARCHITECTURAL FEATURES, CONSULT MECHANICAL AND ARCHITECTURAL DRAWINGS FOR EQUIPMENT AND FEATURE LOADS.
19. PREDRILL HOLES AS NEEDED FOR ANY SIZE NAIL TO AVOID SPLITTING WOOD FRAMING MEMBERS.
20. NO SHOT PIN IS ALLOWED AT CURBS & EDGE OF SLABS
21. RETIGHTEN BOLTS BEFORE CLOSING-IN
22. EXTERIOR USE NAILS SHOULD BE CORROSIVE RESISTANCE

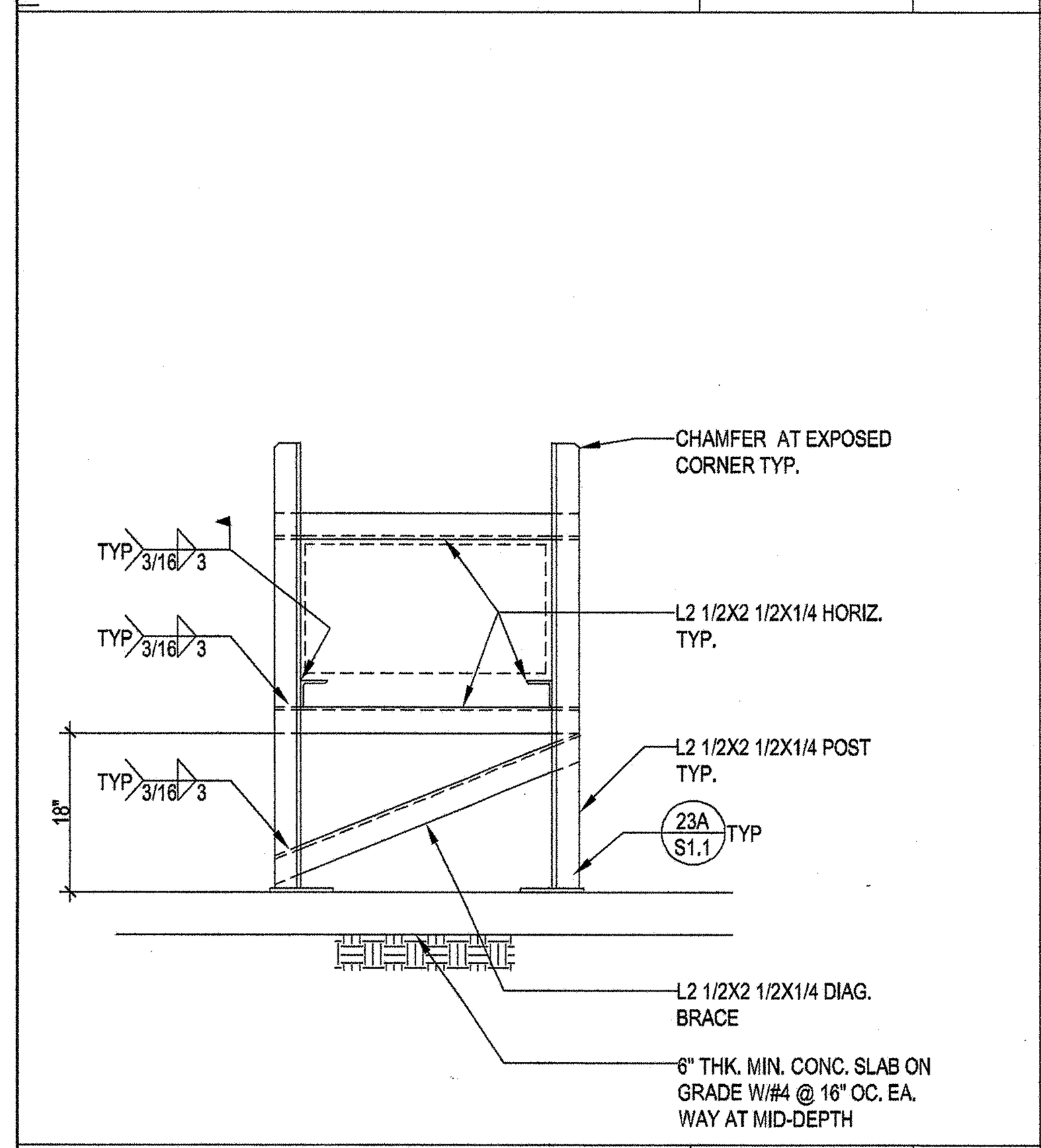

3/4"=1'-0" — 7

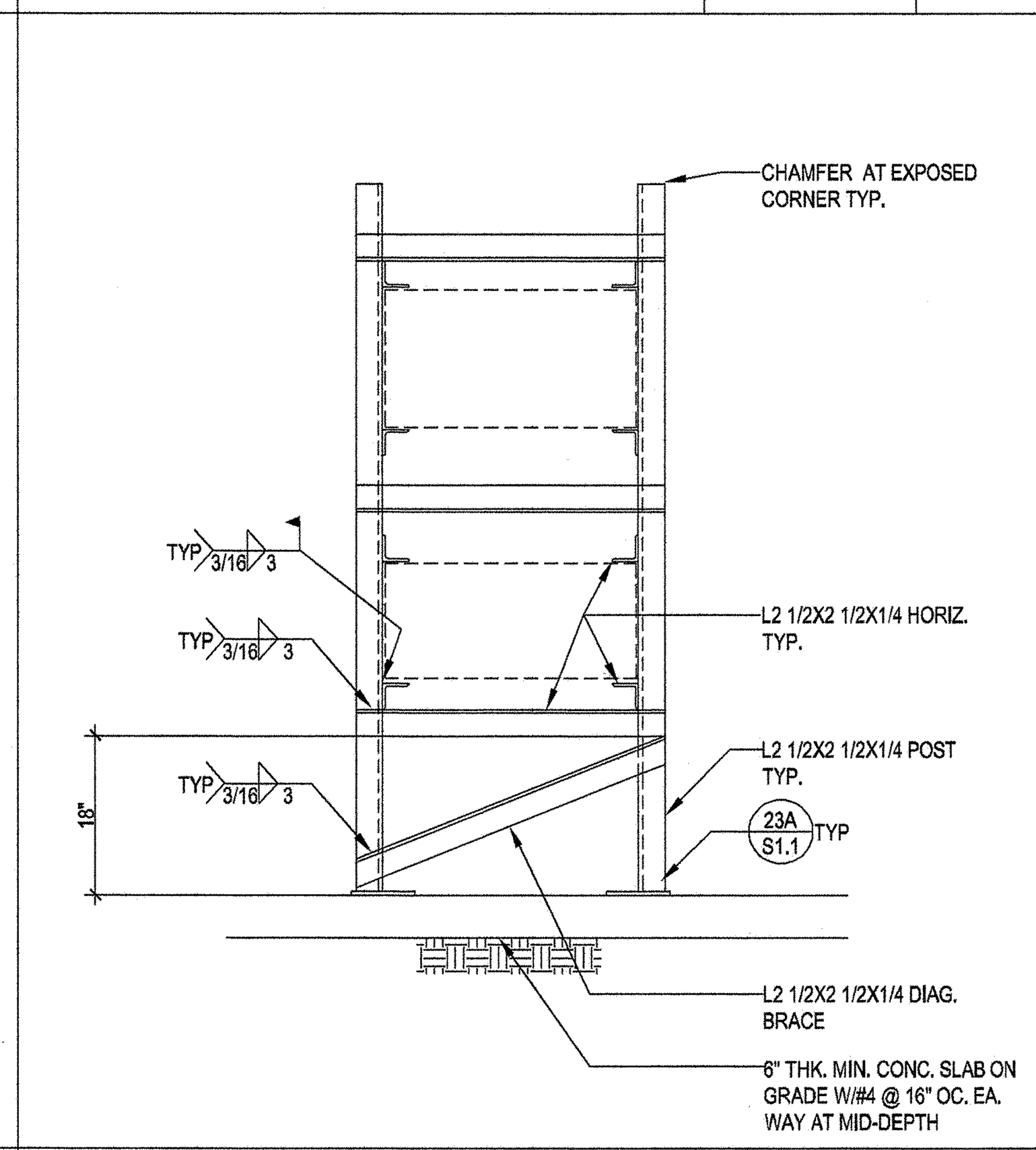

3/4"=1'-0" — 8

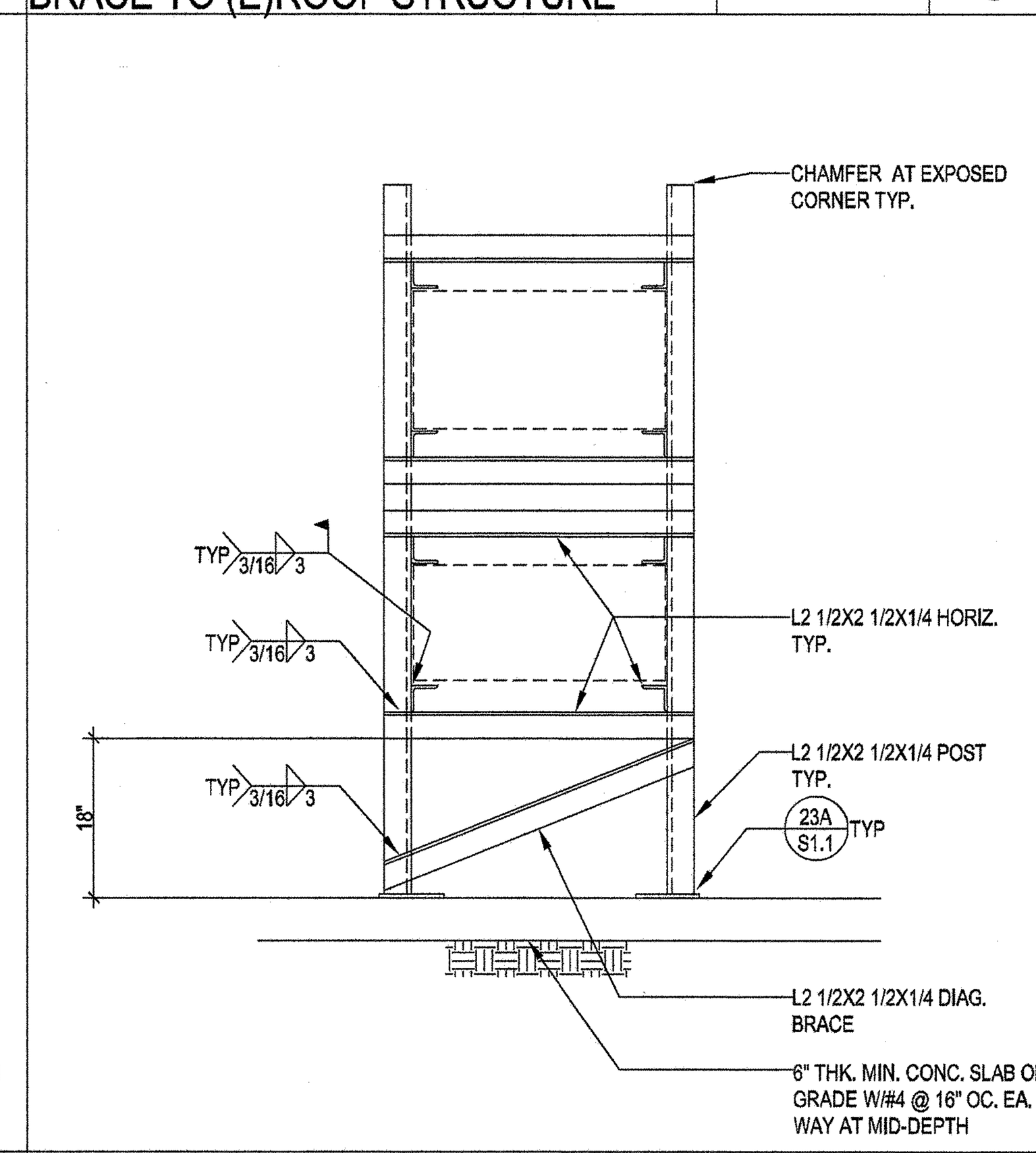

3/4"=1'-0" — 9

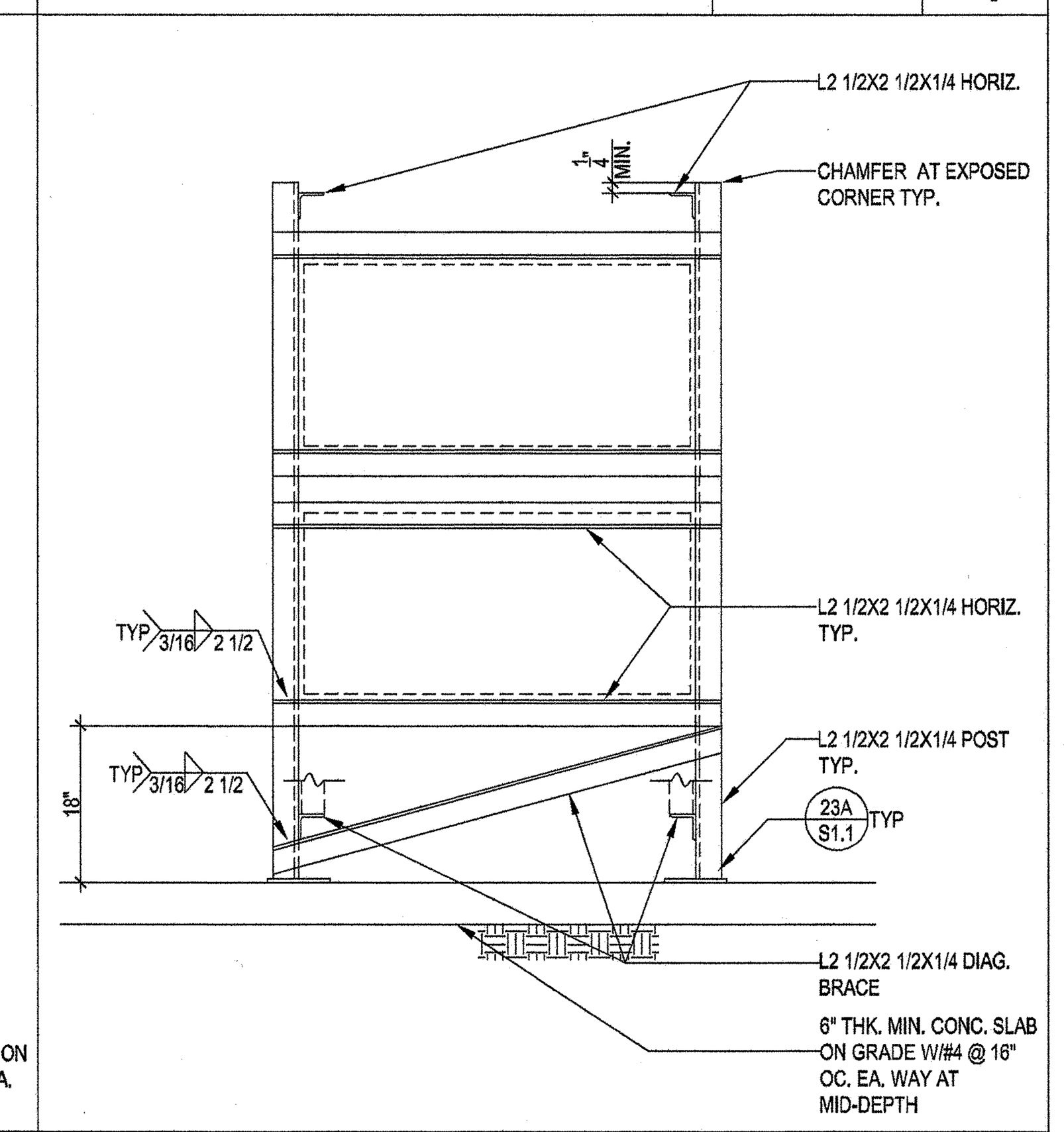

3/4"=1'-0" — 10

GENERAL

1. THE GENERAL CONTRACTOR SHALL VERIFY ALL DIMENSIONS AND SITE CONDITIONS BEFORE STARTING WORK. THE ARCHITECT SHALL BE NOTIFIED OF ANY DISCREPANCY BEFORE PROCEEDING WITH THE WORK.
2. DIMENSIONS SHALL TAKE PRECEDENCE OVER SCALES SHOWN ON DRAWINGS.
3. ALL WORK SHALL CONFORM TO THE MINIMUM STANDARDS OF THE 2013 EDITION OF THE CALIFORNIA BUILDING CODE AND TITLE 24 OF THE CALIFORNIA CODE OF REGULATIONS AND ANY OTHER REGULATIONS OVER ANY PORTION OF THE WORK, INCLUDING THE OCCUPATIONAL SAFETY AND HEALTH ADMINISTRATION, AND THOSE LISTED IN THESE NOTES AND SPECIFICATIONS.
4. SEE ARCHITECTURAL, ELECTRICAL, AND MECHANICAL DRAWINGS FOR PITS, TRENCHES, OPENINGS, DEPRESSIONS, ETC., NOT SHOWN ON THE STRUCTURAL DRAWINGS.
5. THE CONTRACT STRUCTURAL DRAWINGS AND SPECIFICATIONS REPRESENT THE FINISHED STRUCTURE. THEY DO NOT INDICATE THE METHOD OF CONSTRUCTION. THE CONTRACTOR SHALL PROVIDE ALL MEASURES NECESSARY TO PROTECT THE STRUCTURE DURING CONSTRUCTION. SUCH MEASURES SHALL INCLUDE, BUT NOT BE LIMITED TO BRACING, SHORING FOR LOADS DUE TO CONSTRUCTION EQUIPMENT, ETC. OBSERVATION VISITS TO THE SITE BY THE STRUCTURAL ENGINEER SHALL NOT INCLUDE THE INSPECTION OF THE ABOVE ITEMS.
6. CONTRACTOR SHALL INVESTIGATE SITE DURING CLEARING AND EARTHWORK OPERATIONS FOR FILLED EXCAVATIONS OR BURIED STRUCTURES SUCH AS CESSPOOLS, CISTERNS, FOUNDATIONS, ETC. IF ANY SUCH STRUCTURES ARE FOUND, STRUCTURAL AND GEOTECHNICAL ENGINEER SHALL BE NOTIFIED IMMEDIATELY.
7. CONSTRUCTION MATERIALS SHALL BE SPREAD OUT IF PLACED ON FRAMED FLOORS OR ROOF. LOAD SHALL NOT EXCEED THE DESIGN LIVE LOAD PER SQUARE FOOT. PROVIDE ADEQUATE SHORING AND OR BRACING WHERE STRUCTURE HAS NOT ATTAINED DESIGN STRENGTH.
8. DESIGN LOADS:

   WIND DESIGN CRITERIA:
   WIND SPEED.....Vult =110 mph (3S GUST)
   EXPOSURE C
   RISK CATEGORY : II
   GCpi + 0.18

   SEISMIC DESIGN:
   RISK CATEGORY = II
   Ie=1.00
   S_S=1.675, S_1=0.615
   SITE CLASS D
   S_{DS}=1.116, S_{D1}=0.615
   S_{MS}=1.675, S_{M1}= 0.923
   SEISMIC DESIGN CATEGORY= D
   ANALYSIS PROCEDURE = EQUIVALENT LATERAL FORCE PROCEDURE

CONCRETE

1. ALL CONCRETE SHALL CONFORM TO 2013 CBC, PART II (CCR).
2. CEMENT SHALL CONFORM TO A.S.T.M. (C-150) TYPE II/V.
3. ANCHOR BOLTS, DOWELS, INSERTS, ETC. SHALL BE SECURELY TIED IN PLACE PRIOR TO POURING CONCRETE.
4. CONCRETE SHALL BE CURED BY KEEPING CONTINUOUSLY WET FOR 10 DAYS OR BY AN APPROVED CURING COMPOUND.
5. REFER TO ARCHITECTURAL, MECHANICAL, ELECTRICAL AND PLUMBING DRAWINGS FOR MISCELLANEOUS ITEMS TO BE CAST INTO CONCRETE AND FOR FLOOR DEPRESSIONS, PITS, ETC.
6. MINIMUM CONCRETE COMPRESSIVE STRENGTHS AT 28 DAYS (MAX WATER/CEMENT RATIO = .45) WITH SLUMP =4" SHALL BE AS FOLLOWS:
   FOUNDATION....................3000 PSI (STONE)
   SLABS ON GRADE....................3000 PSI (STONE)
7. SLABS ON GRADE SHALL BE REINFORCED WITH #3 @ 16" O.C. EACH WAY UNLESS SPECIFICALLY NOTED.
8. ALL CONCRETE SHALL BE NORMAL WEIGHT CONCRETE EXCEPT AS NOTED.
9. CONCRETE PROPORTIONING SHALL BE BASED ON ACI 318-11 SECTION 5.3
10. 15% MAXIMUM FLY ASH MAY BE USE IN THE NORMAL WIEGHT CONCRETE MIX DESIGN. FLY ASH SHALL CONFORM TO ASTM C618 FOR CLASS N OR F.
11. ALL HEADED ANCHOR BOLTS SHALL CONFORM TO A.S.T.M. F1554 GR 36 OR A449 SPECIFICATION. ALL-THREAD RODS IN FOUNDATION SHALL CONFORM TO A.S.T.M. A36 SPECIFICATION.

REINFORCING STEEL

1. BAR REINFORCING SHALL CONFORM TO ASTM A-615 GRADE 60 DEFORMED FOR NO. 5 AND LARGER; NO. 4 AND SMALLER SHALL CONFORM TO GRADE 40.
2. WELDED WIRE FABRIC SHALL CONFORM TO ASTM A-185, FLAT SHEETS. KEEP REINFORCING AT MID-DEPTH OF SLAB-ON-GRADE.
3. DETAILS OF REINFORCEMENT SHALL BE IN ACCORDANCE WITH CHAPTER 7 OF AMERICAN CONCRETE INSTITUTE 315 UNLESS NOTED ON THIS DRAWING OR PER TITLE 24 CCR PART 2.
4. LAP BARS IN CONCRETE CONSTRUCTION SHALL BE IN ACCORDANCE WITH THE SCHEDULE GIVEN IN SHEET S1.0
5. LAPS OF WELDED FABRIC AT SPLICES SHALL NOT BE LESS THAN 8 INCHES.
6. REINFORCING STEEL DETAILING, BENDING AND PLACING SHALL BE IN ACCORDANCE WITH THE CONCRETE REINFORCING STEEL INSTITUTE "MANUAL OF STANDARD PRACTICE", LATEST EDITION.
7. ALL REINFORCING STEEL, ANCHOR BOLTS, DOWELS SHALL BE SECURELY TIED IN PLACE BEFORE PLACING CONCRETE.
8. SUBMIT REINFORCING SHOP DRAWINGS FOR REVIEW BY THE ARCHITECT BEFORE FABRICATION.
9. PROVIDE THE FOLLOWING MINIMUM CLEAR COVER OF CONCRETE OVER REINFORCING STEEL UNLESS OTHERWISE NOTED ON PLAN:

   ON EARTH SIDE WHEN PLACED AGAINST EARTH....................3"
   ON EARTH SIDE WHEN FORMED.................... 2"
   EXTERIOR WALL STEEL ABOVE GRADE.................... 2" (1 1/2" FOR #5 & SMALLER)
   INTERIOR WALL STEEL AND SUPPORTED SLABS....................3/4"
   TIED COLUMNS (STIRRUPS) ABOVE GRADE....................1-1/2"
   BEAMS (STIRRUPS) ABOVE GRADE....................1-1/2"
   WELDED WIRE FABRIC....................CENTER LINE OF SLAB

EXPANSION ANCHORS

EXPANSION ANCHOR SHALL BE OF TYPE HILTI KWIK BOLT TZ (ESR-1917)

TEST VALUES FOR HARDROCK OR LIGHTWEIGHT CONCRETE	
ANCHOR DIAM.	WEDGE ANCHOR TORQUE VALUE
inches	ft-lbs
3/8"Ø	25
1/2"Ø	40
5/8"Ø	60
3/4"Ø	110

NOTES

1. TEST INSTALLED ANCHORS PER SECTION 1916A.7
2. THE FOLLOWING CRITERIA APPLY FOR THE ACCEPTANCE OF INSTALLED ANCHORS:

A. TORQUE WRENCH METHOD: THE APPLICABLE TEST TORQUE MUST BE REACHED WITHIN THE FOLLOWING LIMITS:

I. WEDGE OR SLEEVE TYPE: ONE-HALF (1/2) TURN OF THE NUT.

II. ONE-QUARTER (1/4) TURN OF THE NUT FOR THE 3/8 IN. SLEEVE ANCHOR ONLY.

3. IF THE MANUFACTURER'S RECOMMENDED INSTALLATION TORQUE IS LESS THAN THE TEST TORQUE NOTED IN THE TABLE, THE MANUFACTURER'S RECOMMENDED INSTALLATION TORQUE SHOULD BE USED IN LIEU OF THE TABULATED VALUES.

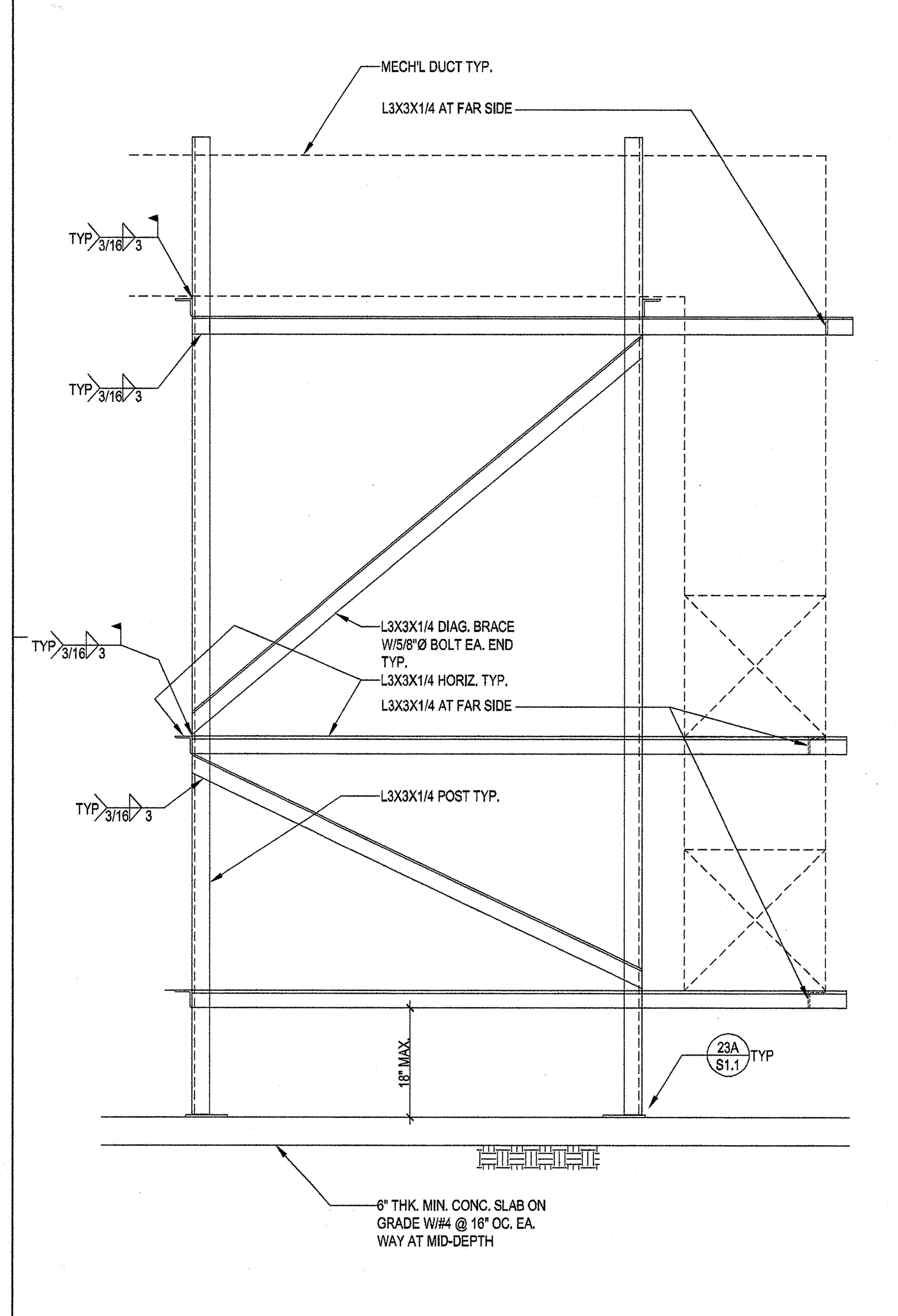

3/4"=1'-0" — 19

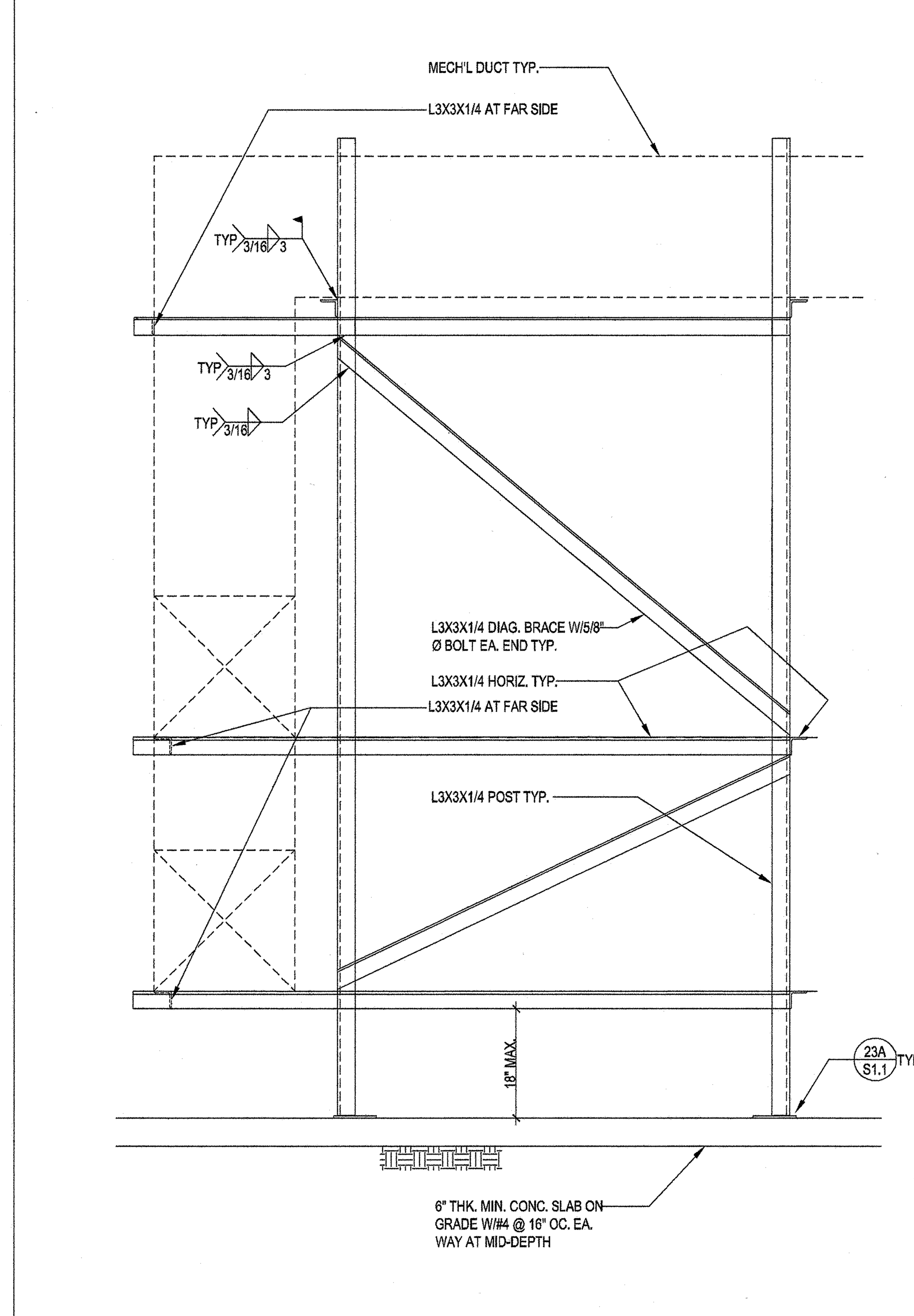

3/4"=1'-0" — 21

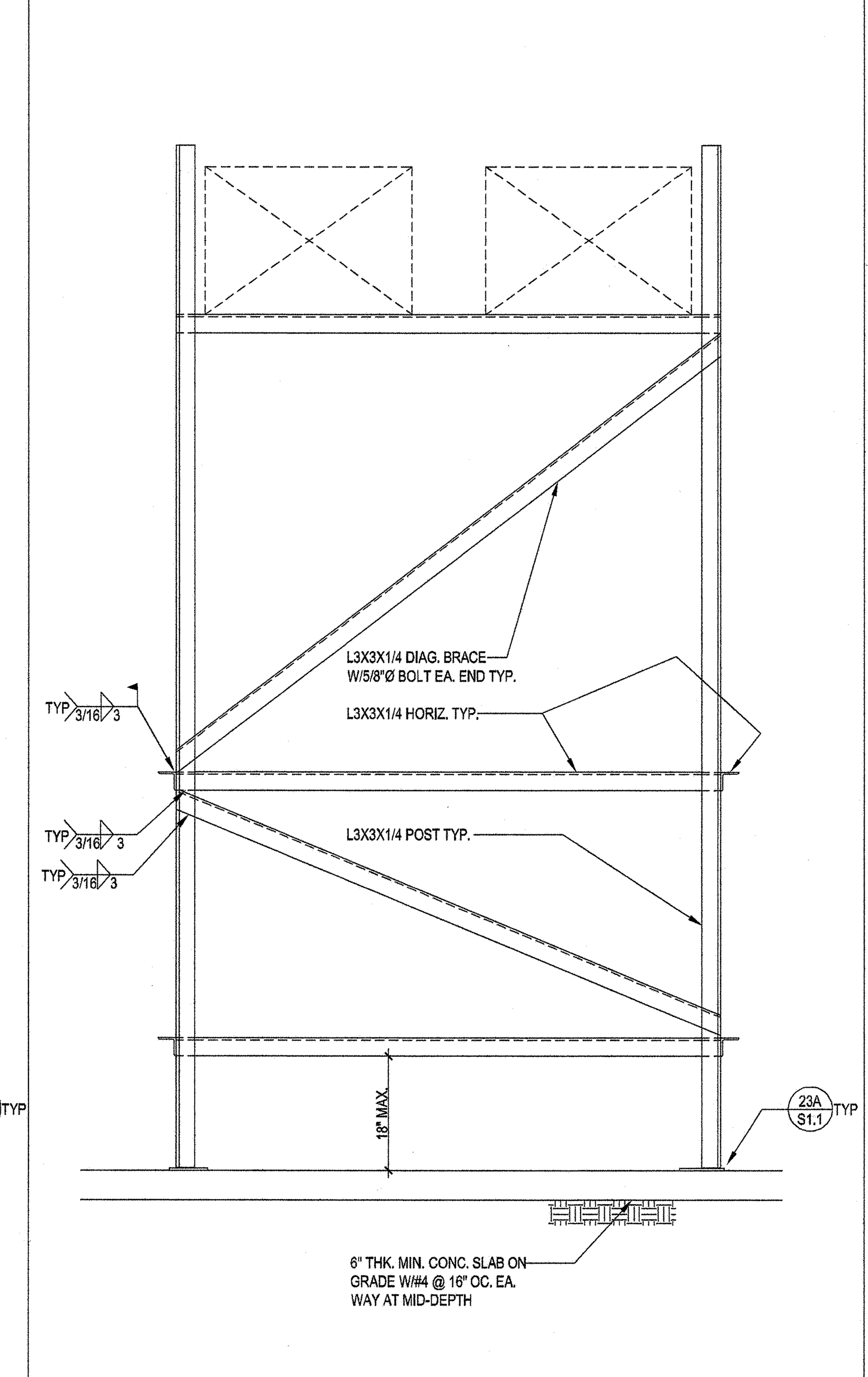

3/4"=1'-0" — 22

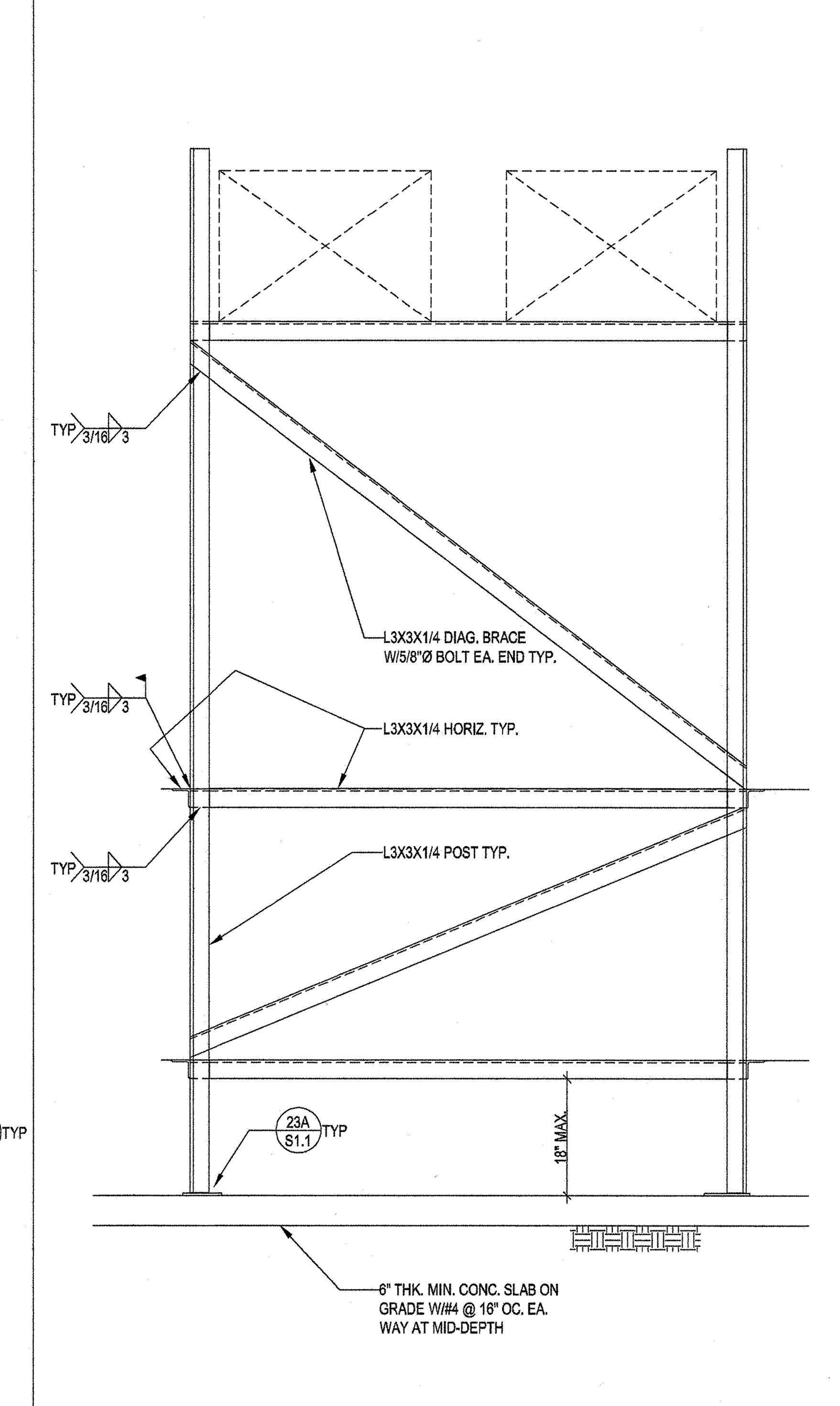

3/4"=1'-0" — 23

WLC ARCHITECTS
CLIENT FOCUSED • PASSION DRIVEN

SOUTHERN CALIFORNIA
8163 ROCHESTER AVENUE, SUITE 100
RANCHO CUCAMONGA
CALIFORNIA 91730-0729

TEL: 909-987-0909
www.wlcarchitects.com

LONGFELOW ELEMENTARY SCHOOL
HVAC REPLACEMENT

COMTON UNIFIED SCHOOL DISTRICT
1101 ~~DISTRICT~~ AVE.
COMPTON, CA. 90220

LICENSED ARCHITECT — MARK GRAHAM — C-26046 — 03-31-19 — STATE OF CALIFORNIA

REGISTERED PROFESSIONAL ENGINEER — PETER TRAN — No. 4628 — Exp. 6-30-19 — STRUCTURAL — STATE OF CALIFORNIA

CONSULTANT
K.B. LEUNG & ASSOCIATES
STRUCTURAL ENGINEERS
9320 BASELINE ROAD, SUITE D
ALTA LOMA, CA 91701
(909) 944 - 0029 PHONE
(909) 944 - 7983 FAX

IDENTIFICATION STAMP
DIV. OF THE STATE ARCHITECT
OFFICE OF REGULATION SERVICES
APPL 03-118423
AC — FLS — SS EY
DATE MAR 0 6 2018
FILE: 19-23

NO	DATE	BY	DESCRIPTION
#	REVISIONS		

DRAWN: IDK	CHECKED: PT
DATE: 10/20/17	SCALE: AS NOTED
PROJECT NUMBER: 1723400	

GENERAL NOTES & DETAILS

DRAWING NUMBER: S1.0

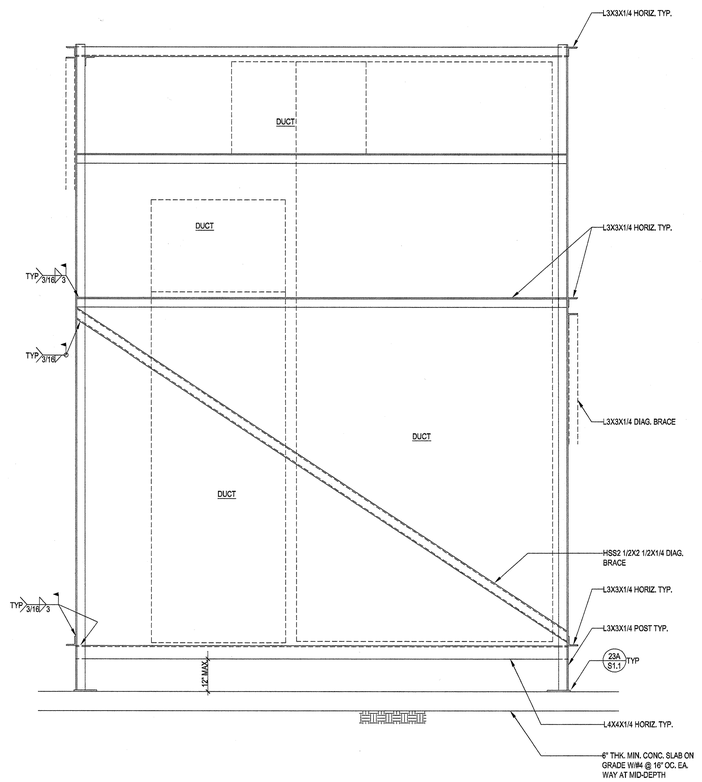

3/4"=1'-0" 8

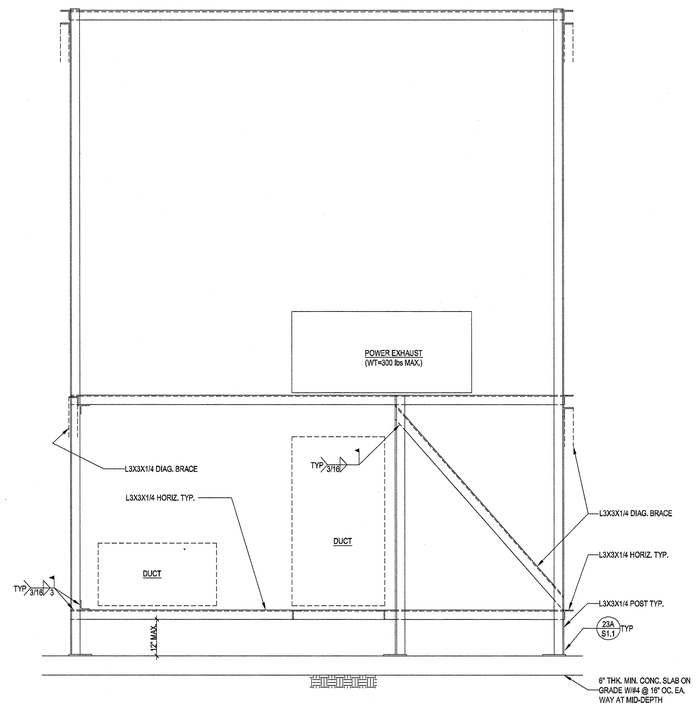

3/4"=1'-0" 10

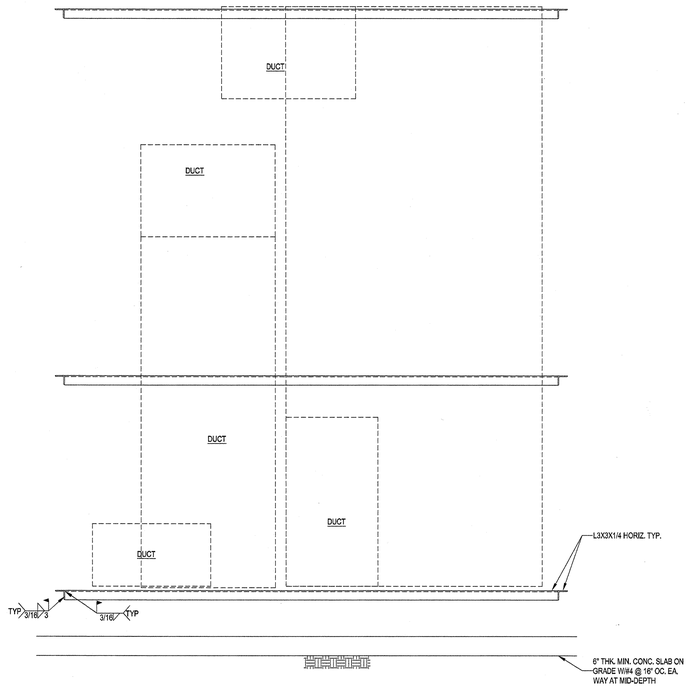

3/4"=1'-0" 12

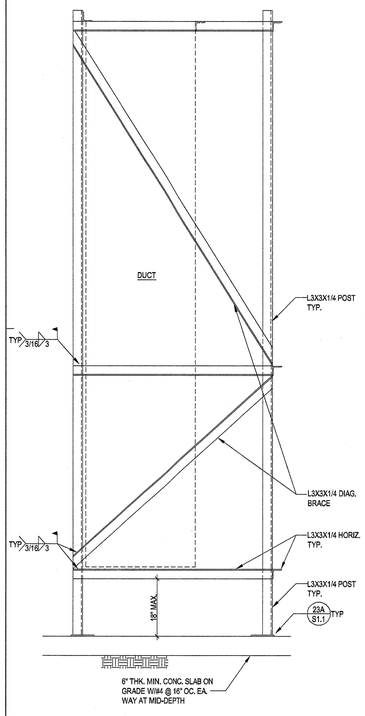

3/4"=1'-0" 19

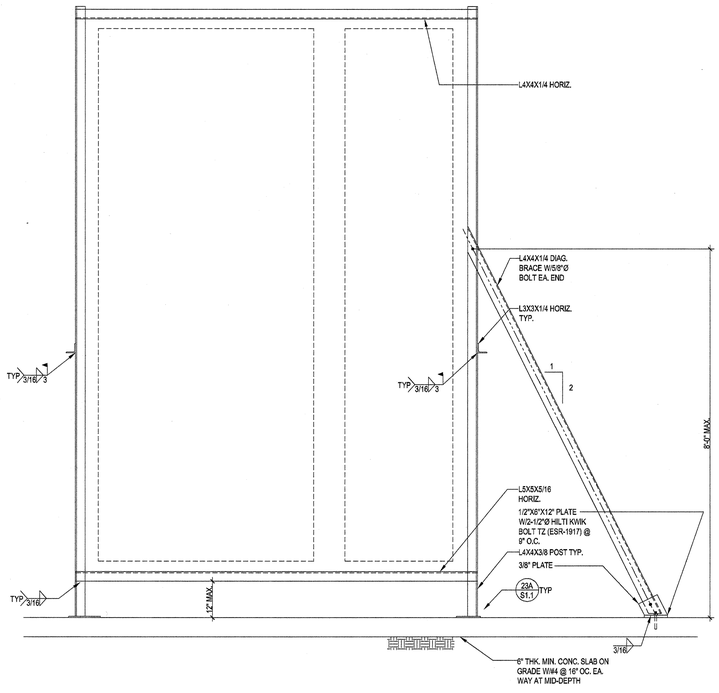

3/4"=1'-0" 21

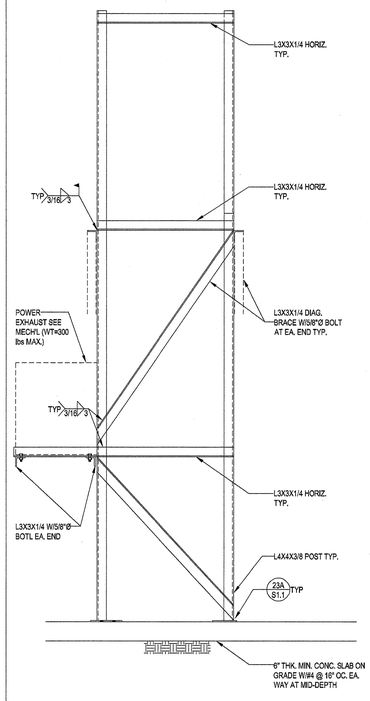

3/4"=1'-0" 22

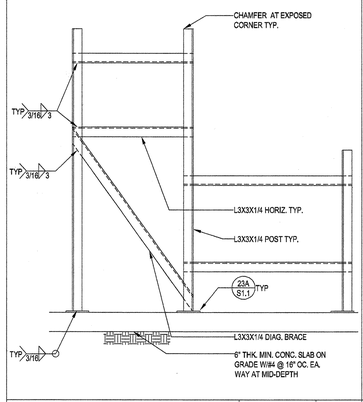

3/4"=1'-0" 17

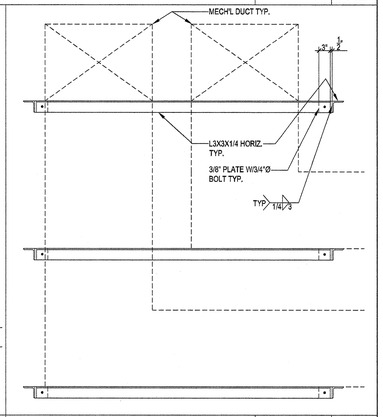

3/4"=1'-0" 18

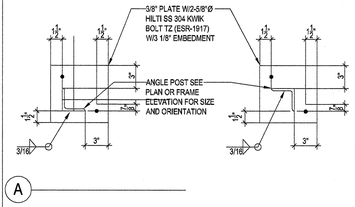

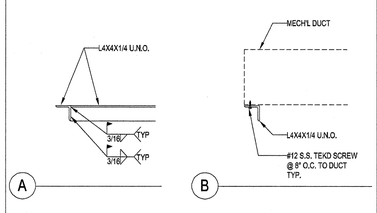

3/4"=1'-0" 23

3/4"=1'-0" 24

ARCHITECTS
WLC
CLIENT FOCUSED • PASSION DRIVEN

SOUTHERN CALIFORNIA
8163 ROCHESTER AVENUE, SUITE 100
RANCHO CUCAMONGA
CALIFORNIA 91730-0729

TEL: 909-987-0909

www.wlcarchitects.com

LONGFELLOW ELEMENTARY SCHOOL HVAC REPLACEMENT

COMTON UNIFIED SCHOOL
1101 BISSELL AVE.
COMPTON, CA. 90220

LICENSED ARCHITECT
MARK GRAHAM
C-26046
03-31-19
STATE OF CALIFORNIA

REGISTERED PROFESSIONAL ENGINEER
PETER TRAN
No. 4628
Exp. 6-30-19
STRUCTURAL
STATE OF CALIFORNIA

CONSULTANT
K.B. LEUNG & ASSOCIATES
STRUCTURAL ENGINEERS
9320 BASELINE ROAD, SUITE D
ALTA LOMA, CA. 91701
(909) 944 - 0029 PHONE
(909) 944 - 7883 FAX

IDENTIFICATION STAMP
DIV. OF THE STATE ARCHITECT
OFFICE OF REGULATION SERVICES
APPL 03-118423
AC. — FLS — SS EY
DATE MAR 0 8 2018
FILE: 19-23

NO	DATE	BY	DESCRIPTION
			REVISIONS

DRAWN: IDK	CHECKED: PT
DATE: 10/20/17	SCALE: AS NOTED
PROJECT NUMBER: 1723400	

DETAILS

DRAWING NUMBER: S1.1

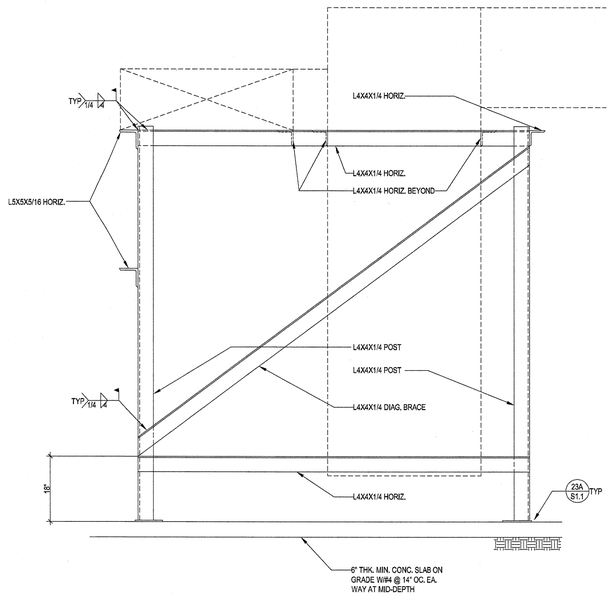

3/4"=1'-0" 8

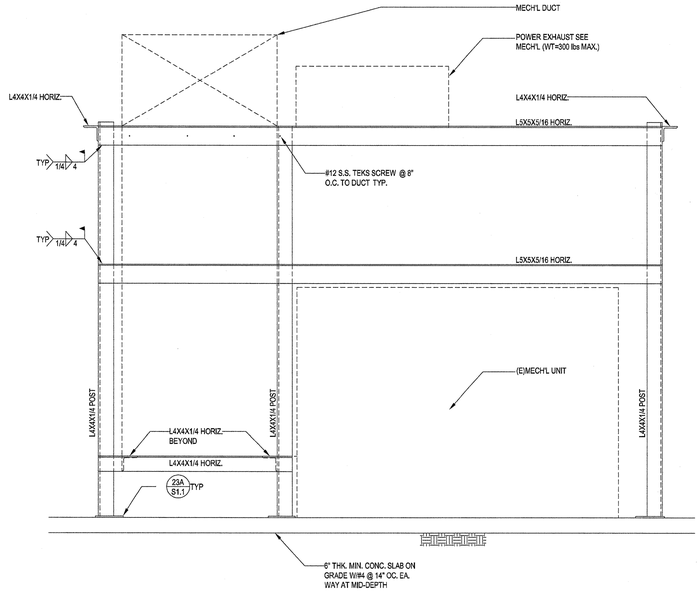

3/4"=1'-0" 10

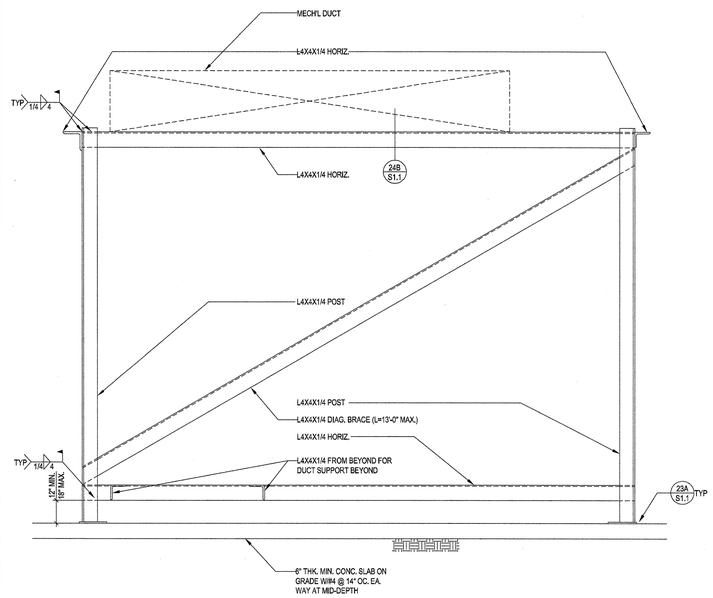

3/4"=1'-0" 12

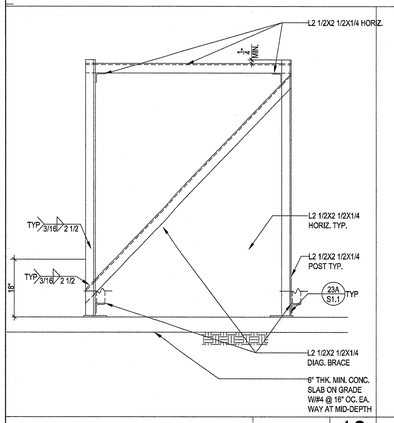

3/4"=1'-0" 13

3/4"=1'-0" 17

3/4"=1'-0" 18

3/4"=1'-0" 21

3/4"=1'-0" 19

3/4"=1'-0" 21

3/4"=1'-0" 22

3/4"=1'-0" 23

3/4"=1'-0" 24

WLC ARCHITECTS
CLIENT FOCUSED • PASSION DRIVEN

SOUTHERN CALIFORNIA
8163 ROCHESTER AVENUE, SUITE 100
RANCHO CUCAMONGA
CALIFORNIA 91730-0729
TEL: 909-987-0909
www.wlcarchitects.com

LONGFELOW ELEMENTARY SCHOOL HVAC REPLACEMENT

COMTON UNIFIED SCHOOL
1101 DISTRICT AVE.
COMPTON, CA. 90220

LICENSED ARCHITECT MARK GRAHAM C-26046 03-31-19 STATE OF CALIFORNIA

REGISTERED PROFESSIONAL ENGINEER PETER TRAN No. 4628 Exp. 6-30-19 STRUCTURAL STATE OF CALIFORNIA

CONSULTANT
K.B. LEUNG & ASSOCIATES
STRUCTURAL ENGINEERS
9320 BASELINE ROAD, SUITE D
ALTA LOMA, CA 91701
(909) 944 - 0029 PHONE
(909) 944 - 7983 FAX

IDENTIFICATION STAMP
DIV. OF THE STATE ARCHITECT
OFFICE OF REGULATION SERVICES
APPL 03-118423
AC — FLS — SS EY
DATE MAR 0 6 2018
FILE: 19-23

NO	DATE	BY	DESCRIPTION
#	REVISIONS		

DRAWN: IDK	CHECKED: PT
DATE: 10/20/17	SCALE: AS NOTED
PROJECT NUMBER: 1723400	

DETAILS

DRAWING NUMBER: S1.2

NOTES:

1. ALL DUCT SUPPORTED BY STEEL ANGLE SHALL BE FASTENED BY #12-24 TEKS SCREW (ESR-1976) @ 12" MAX. O.C. FROM STEEL ANGLE INTO DUCT.
2. PROVIDE #12-24 TEKS SCREW (ESR-1967) @ 8" MAX. O.C. TO ALL POWER EXHAUST.

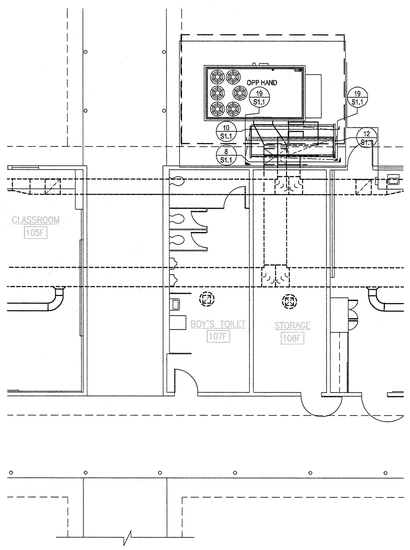

BLD'G C

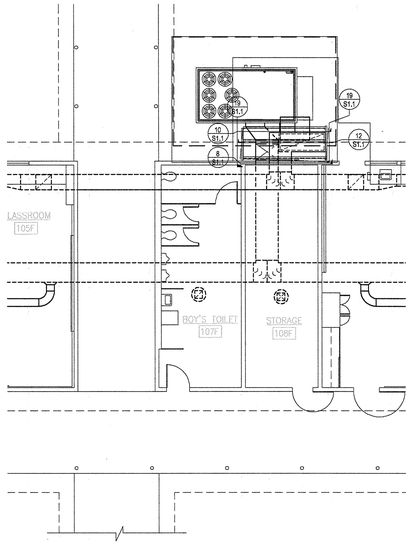

BLD'G F

PARTIAL BUILDING C & F FLOOR PLAN

1/8"=1'-0" | 1

NOTES:

1. ALL DUCT SUPPORTED BY STEEL ANGLE SHALL BE FASTENED BY #12-24 TEKS SCREW (ESR-1976) @ 12" MAX. O.C. FROM STEEL ANGLE INTO DUCT.
2. PROVIDE #12-24 TEKS SCREW (ESR-1967) @ 8" MAX. O.C. TO ALL POWER EXHAUST.

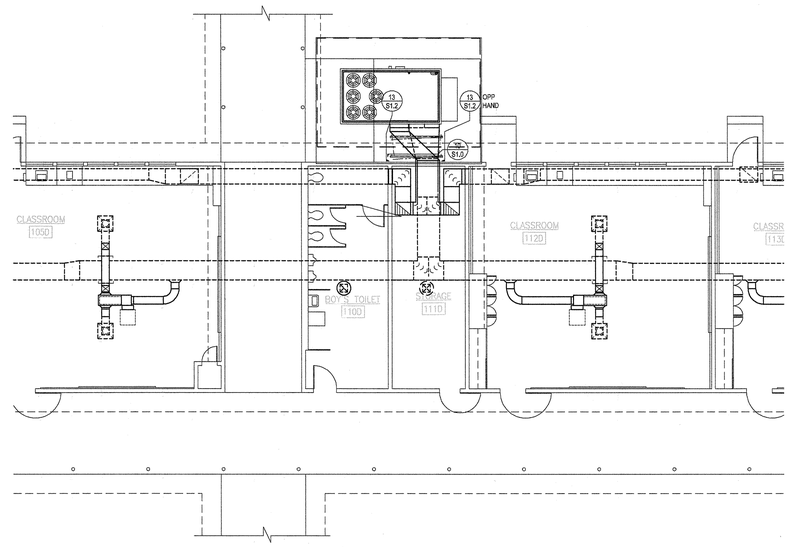

PARTIAL BUILDING D FLOOR PLAN

1/8"=1'-0" | 2

NOTES:

1. ALL DUCT SUPPORTED BY STEEL ANGLE SHALL BE FASTENED BY #12-24 TEKS SCREW (ESR-1976) @ 12" MAX. O.C. FROM STEEL ANGLE INTO DUCT.
2. PROVIDE #12-24 TEKS SCREW (ESR-1967) @ 8" MAX. O.C. TO ALL POWER EXHAUST.

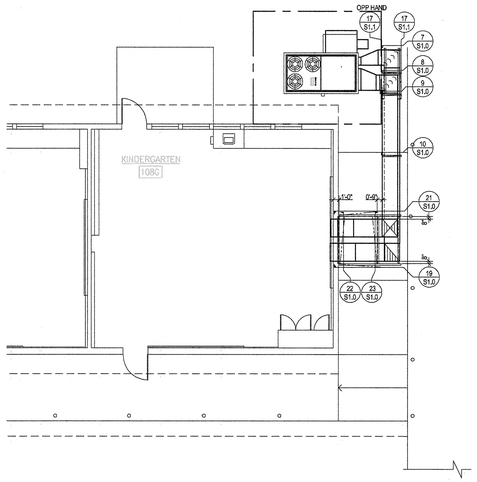

PARTIAL BUILDING G FLOOR PLAN

1/8"=1'-0" | 3

NOTES:

1. ALL DUCT SUPPORTED BY STEEL ANGLE SHALL BE FASTENED BY #12-24 TEKS SCREW (ESR-1976) @ 12" MAX. O.C. FROM STEEL ANGLE INTO DUCT.
2. PROVIDE #12-24 TEKS SCREW (ESR-1967) @ 8" MAX. O.C. TO ALL POWER EXHAUST.

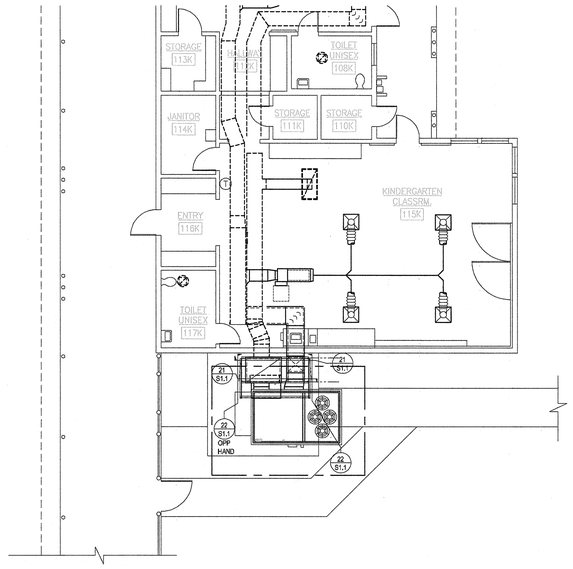

PARTIAL BUILDING K FLOOR PLAN

1/8"=1'-0" | 4

NOTES:

1. ALL DUCT SUPPORTED BY STEEL ANGLE SHALL BE FASTENED BY #12-24 TEKS SCREW (ESR-1976) @ 12" MAX. O.C. FROM STEEL ANGLE INTO DUCT.
2. PROVIDE #12-24 TEKS SCREW (ESR-1967) @ 8" MAX. O.C. TO ALL POWER EXHAUST.

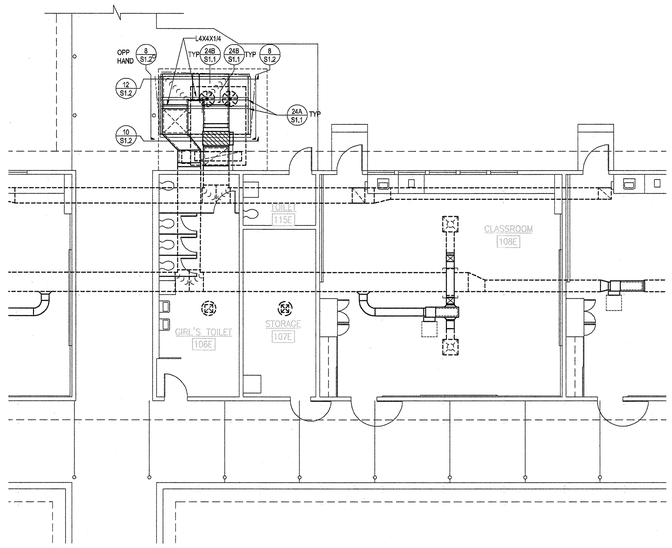

PARTIAL BUILDING E FLOOR PLAN

1/8"=1'-0" | 5

ARCHITECTS
WLC
CLIENT FOCUSED • PASSION DRIVEN

SOUTHERN CALIFORNIA
8163 ROCHESTER AVENUE, SUITE 100
RANCHO CUCAMONGA
CALIFORNIA 91730-0729

TEL: 909-987-0909

www.wlcarchitects.com

LONGFELOW ELEMENTARY SCHOOL HVAC REPLACEMENT

COMTON UNIFIED SCHOOL DISTRICT
1101 BULLIS AVE.
COMPTON, CA. 90220

LICENSED ARCHITECT
MARK GRAHAM
C-26046
03-31-19
STATE OF CALIFORNIA

REGISTERED PROFESSIONAL ENGINEER
PETER TRAN
No. 4628
Exp. 6-30-19
STRUCTURAL
STATE OF CALIFORNIA

CONSULTANT
K.B. LEUNG & ASSOCIATES
STRUCTURAL ENGINEERS
9330 BASELINE ROAD, SUITE D
ALTA LOMA, CA 91701
(909) 944 - 0029 PHONE
(909) 944 - 7983 FAX

IDENTIFICATION STAMP
DIV. OF THE STATE ARCHITECT
OFFICE OF REGULATION SERVICES
APPL 03-118423
AC ___ FLS ___ SS BY
DATE AUG 0 6 2018

FILE: 19-23

NO	DATE	BY	DESCRIPTION
1			REVISIONS

DRAWN: IDK	CHECKED: PT
DATE: 10/20/17	SCALE: AS NOTED
PROJECT NUMBER: 1723400	

BLD'G C, D, F, G, K
PARTIAL FLOOR PLAN

DRAWING NUMBER: S2.1

GENERAL NOTES

----- GENERAL NOTES -----

1. ENTIRE INSTALLATION SHALL CONFORM TO THE REQUIREMENTS OF THE 2016 CALIFORNIA MECHANICAL CODE, 2016 CALIFORNIA BUILDING CODE, AND ALL OTHER APPLICABLE CODES AND REGULATIONS, INCLUDING 2016 BUILDING ENERGY EFFICIENCY STANDARDS DIVISION T-24.

2. 2016 CALIFORNIA GREEN BUILDING STANDARDS (CALGREEN) CODE INCLUDING THE APPLICABLE MANDATORY MEASURES:

   - 5.201.1 CALIFORNIA ENERGY CODE. FOR THE PURPOSES OF MANDATORY ENERGY EFFICIENCY STANDARDS IN THIS CODE, THE CALIFORNIA ENERGY COMMISSION WILL CONTINUE TO ADOPT MANDATORY STANDARDS.
   - 5.504.3: COVERING OF DUCT OPENINGS AND PROTECTION OF MECHANICAL EQUIPMENT DURING CONSTRUCTION. AT THE TIME OF ROUGH INSTALLATION AND DURING STORAGE ON THE CONSTRUCTION SITE UNTIL FINAL STARTUP OF THE HEATING, COOLING AND VENTILATING EQUIPMENT, ALL DUCT AND OTHER RELATED AIR DISTRIBUTION COMPONENT OPENINGS SHALL BE COVERED WITH TAPE, PLASTIC, SHEET METAL OR OTHER METHODS ACCEPTABLE TO THE ENFORCING AGENCY TO REDUCE THE AMOUNT OF DUST, WATER AND DEBRIS WHICH MAY ENTER THE SYSTEM.
   - 5.504.5.3.1 FILTERS. IN MECHANICALLY VENTILATED BUILDINGS, PROVIDE REGULARLY OCCUPIED AREAS OF THE BUILDING WITH AIR FILTRATION MEDIA FOR OUTSIDE AND RETURN AIR PRIOR TO OCCUPANCY THAT PROVIDES AT LEAST A MINIMUM EFFICIENCY REPORTING VALUE (MERV) OF 8. MERV 8 FILTERS SHALL BE INSTALLED PRIOR TO OCCUPANCY AND RECOMMENDATIONS FOR MAINTENANCE WITH FILTERS OF THE SAME VALUE SHALL BE INCLUDED IN THE OPERATION AND MAINTENANCE MANUAL. EXCEPTIONS:
     - a. AN ASHRAE 10-PERCENT TO 30-PERCENT EFFICIENCY FILTER SHALL BE PERMITTED FOR AN HVAC UNIT MEETING THE 2016 CALIFORNIA ENERGY CODE HAVING 60,000 BTU/H OR LESS CAPACITY PER FAN COIL, IF THE ENERGY USE OF THE AIR DELIVERY SYSTEM IS 0.4 W/CFM OR LESS AT THE DESIGN AIR FLOW.
     - b. EXISTING MECHANICAL EQUIPMENT.
   - 5.506.1 OUTSIDE AIR DELIVERY. FOR MECHANICALLY OR NATURALLY VENTILATED SPACES IN BUILDINGS, MEET THE MINIMUM REQUIREMENTS OF SECTION 121 (REQUIREMENTS FOR VENTILATION) OF THE 2016 CALIFORNIA ENERGY CODE, OR THE APPLICABLE LOCAL CODE, WHICHEVER IS MORE STRINGENT, AND DIVISION 1, CHAPTER 4 OF CCR, TITLE 8.
   - 5.508.1 OZONE DEPLETION AND GREENHOUSE GAS REDUCTIONS. INSTALL HVAC AND REFRIGERATION AND FIRE SUPPRESSION EQUIPMENT SHALL COMPLY WITH 5.508.1.1 AND 5.508.1.2.
   - 5.508.1.1 CHLOROFLUOROCARBONS (CFCS). INSTALL HVAC, REFRIGERATION AND FIRE SUPPRESSION EQUIPMENT THAT DO NOT CONTAIN CFCS.
   - 5.508.1.2 HALONS. INSTALL HVAC, REFRIGERATION AND FIRE SUPPRESSION EQUIPMENT THAT DO NOT CONTAIN HALONS.
   - ADHESIVES, SEALANTS AND CAULKS SHALL MEET CALGREEN REQUIREMENTS.
   - INSTALLER AND SPECIAL INSPECTORS SHALL MEET ALL QUALIFICATIONS LISTED IN SECTION 702 OF THE 2016 CALIFORNIA GREEN BUILDING STANDARDS CODE.

3. COORDINATE ENTIRE INSTALLATION OF THE HVAC SYSTEM WITH THE WORK OF ALL OTHER TRADES PRIOR TO ANY FABRICATION OR INSTALLATION. PROVIDE ALL FITTINGS, OFFSETS, AND TRANSITIONS AS REQUIRED FOR A COMPLETE WORKABLE INSTALLATION. THE MECHANICAL CONTRACTOR SHALL BE RESPONSIBLE TO COORDINATE ITEMS TO BE PROVIDED BY OTHER TRADES WHERE MENTIONED IN THE CONTRACT DOCUMENTS PRIOR TO BID – NO EXCEPTIONS.
4. COORDINATE THE LOCATIONS OF ALL CEILING DIFFUSERS, REGISTERS, AND GRILLES WITH THE ARCHITECTURAL REFLECTIVE CEILING PLAN, ELECTRICAL LIGHTING LAYOUT AND ARCHITECTURAL ROOM ELEVATIONS. THE ARCHITECT AND ENGINEER SHALL BE IMMEDIATELY NOTIFIED OF ANY CONFLICTS PRIOR TO FABRICATION AND INSTALLATION.
5. CONTRACTOR SHALL NOTIFY OWNER AND ENGINEER OF CONSTRUCTION PHASING PRIOR TO START OF CONSTRUCTION, REMOVAL, AND/OR REPLACEMENT OF ANY EQUIPMENT. CONTRACTOR SHALL RECEIVE PERMISSION IN WRITING PRIOR TO THE START OF ANY WORK DURING ANY PHASE FOR WORK SHOWN HEREIN. IT SHALL BE THE RESPONSIBILITY OF THE CONTRACTOR TO CONDUCT WORK AND ARRANGE HIS WORK IN A MANNER THAT WILL CAUSE MINIMAL INTERFERENCE WITH DAILY FUNCTIONS WITHIN THE FACILITY. ANY EXPECTED DOWNTIME SHALL BE COORDINATED WITH THE OWNER.
6. ALL EQUIPMENT, DUCTS, PIPING, AND OTHER DEVICES AND MATERIALS INSTALLED OUTSIDE OF THE BUILDING OR OTHERWISE EXPOSED TO THE WEATHER SHALL BE COMPLETELY WEATHER-PROOFED AND PAINTED TO MATCH, COORDINATE WITH ARCHITECT PRIOR TO PAINTING.
7. THE OWNER ACKNOWLEDGES THAT THE DESIGN PROFESSIONAL'S PLANS ARE INSTRUMENTS OF PROFESSIONAL SERVICE. NEVERTHELESS, THE PLANS PREPARED UNDER THIS AGREEMENT SHALL BECOME THE PROPERTY OF THE OWNER UPON COMPLETION OF THE WORK. THE OWNER AGREES TO HOLD HARMLESS AND INDEMNIFY THE DESIGN PROFESSIONAL AGAINST ALL DAMAGES, CLAIMS AND LOSSES, INCLUDING DEFENSE COSTS, ARISING OUT OF ANY RESCUE OF THE PLANS WITHOUT THE WRITTEN AUTHORIZATION OF THE DESIGN PROFESSIONAL.
8. ALL DIMENSIONS SHOWN ON THESE PLANS ARE APPROXIMATE AND MUST BE CONFIRMED ON SITE.
9. PRIOR TO OCCUPANCY, THE ENTIRE H.V.A.C. SYSTEMS SHALL BE BALANCED IN ACCORDANCE WITH (AABC) ASSOCIATED AIR BALANCE COUNCIL STANDARDS BY AN INDEPENDENT AIR BALANCE CONTRACTOR. CERTIFICATION SHALL BE PROVIDED BY THE CONTRACTOR FOR AIR AND HYDRONIC AS APPLICABLE. SYSTEMS SHALL BE BALANCED AS INDICATED ON PLANS INCLUDING FRESH AIR VENTILATION. WHERE THERE IS A CONFLICT WITH THE MECHANICAL PLANS, THE AIR BALANCE CONTRACTOR SHALL NOTIFY THE ENGINEER PRIOR TO BALANCING OF SYSTEM. IF NOT THE AIR BALANCE CONTRACTOR SHALL BEAR ALL COSTS INCURRED FOR WORK THAT MUST BE RE-BALANCED DUE TO CONFLICTS ON CONTRACT DOCUMENTS. CONTRACTOR SHALL PROVIDE THREE COPIES OF THE AIR BALANCE REPORT TO THE ENGINEER FOR APPROVAL.
10. FOR INACCESSIBLE AREAS THE CONTRACTOR SHALL PROVIDE ACCESS PANELS FOR ALL DAMPERS, EQUIPMENT, SMOKE DETECTORS, AND CONTROL DEVICES. THESE PANELS SHALL MATCH THE RATING OF THE WALL AND/OR CEILING THAT THEY ARE LOCATED IN. MINIMUM ACCESS PANEL SIZES SHALL BE AS FOLLOWS:

    1) HAND ACCESS: 12"x12"

    2) BODY ACCESS: 30"x30" MIN. WHERE A LARGER ACCESS SIZE IS REQUIRED DUE TO INSTALLATION CONSTRAINTS, THE CONTRACTOR SHALL DO SO AT NO ADDITIONAL COST AND SHALL NOTIFY THE ARCHITECT AND ENGINEER OF DEVIATIONS PRIOR TO INSTALLATION.
11. COORDINATE THE LOCATION OF ALL ROOF OPENINGS AND THE LOCATION OF ALL ROOF MOUNTED EQUIPMENT WITH THE STRUCTURAL AND ARCHITECTURAL PLANS PRIOR TO ANY INSTALLATION.
12. PLATFORMS, CURBS, AND FLASHINGS FOR MECHANICAL EQUIPMENT SHALL BE AS INDICATED ON THE STRUCTURAL AND ARCHITECTURAL PLANS, UNLESS NOTED OTHERWISE. WHERE THERE IS A CONFLICT WITH THE MECHANICAL PLANS, THE CONTRACTOR SHALL NOTIFY THE ARCHITECT AND ENGINEER PRIOR TO FABRICATION AND INSTALLATION.
13. ALL EQUIPMENT, ACCESSORIES, AND RELATED PIPING SHALL BE INSTALLED IN STRICT ACCORDANCE WITH THE EQUIPMENT MANUFACTURER'S RECOMMENDATIONS. PROVIDE ALL FITTINGS, TRANSITIONS, DAMPERS, VALVES, AND OTHER DEVICES REQUIRED FOR A COMPLETE WORKABLE INSTALLATION.
14. MAINTENANCE LABEL SHALL BE AFFIXED TO ALL MECHANICAL EQUIPMENT AND A MAINTENANCE MANUAL SHALL BE PROVIDED FOR THE OWNER'S USE.
15. PROVIDE MERV 13 EFFICIENCY THROWAWAY FILTERS FOR ALL AIR CONDITIONING UNITS. SEE EQUIPMENT SCHEDULE AND SPECIFICATIONS FOR TYPE. SIZES SHALL BE AS RECOMMENDED BY THE MANUFACTURER, UNLESS OTHERWISE SPECIFIED.
16. AIR FILTERS SHALL BE STATE FIRE MARSHALL APPROVED AND LISTED. PREFORMED FILTERS HAVING COMBUSTIBLE FRAMING SHALL BE TESTED AS A COMPLETE ASSEMBLY. AIR FILTERS SHALL BE ACCESSIBLE FOR CLEANING OR REPLACEMENT.
17. ALL EQUIPMENT WITH MOVING PARTS SHALL BE PROVIDED WITH FLEXIBLE DUCT AND PIPE CONNECTIONS.
18. ALL EQUIPMENT SHALL BE LABELED AS TO THE SPACE IT SERVES.
19. ALL HVAC EQUIPMENT SHALL BE CERTIFIED BY THE CALIFORNIA ENERGY COMMISSION TO COMPLY WITH LATEST EFFICIENCY STANDARDS.
20. PROVIDE MANUAL VOLUME DAMPERS AND BACKDRAFT DAMPERS FOR FRESH AIR INTAKES ON ALL AIR HANDLING EQUIPMENT AND EXHAUST FANS SERVING CONDITIONED SPACES. EXCEPTION: EQUIPMENT WITH FACTORY ECONOMIZERS. DAMPERS SITUATED ON THE ROOF SHALL BE SECURED AFTER BALANCING, TO AVOID THE POSSIBILITY OF ADJUSTMENT.
21. ALL AIR HANDLING EQUIPMENT SERVING CONDITIONED SPACES SHALL PROVIDE CONTINUOUS FRESH AIR TO SPACES IN OCCUPIED MODE.
22. CONTRACTOR SHALL VERIFY ALL CLEARANCES AND AVAILABLE SPACE FOR DUCTWORK PRIOR TO ORDERING AND/OR FABRICATING MATERIAL.
23. CONTRACTOR TO SUBMIT ALL EQUIPMENT, DUCTWORK, AIR DISTRIBUTION DEVICES, AND OTHER ACCESSORIES TO THE ENGINEER FOR APPROVAL PRIOR TO ANY ORDERING OF SUCH ITEMS.
24. CONTRACTOR SHALL BE RESPONSIBLE FOR COMMISSIONING OF EQUIPMENT.
25. PAINT EXPOSED SURFACES, WHETHER OR NOT COLORS ARE DESIGNATED IN SCHEDULES, EXCEPT WHERE A SURFACE OR MATERIAL IS SPECIFICALLY INDICATED NOT TO BE PAINTED OR IS TO REMAIN NATURAL. WHERE AN ITEM OR SURFACE IS NOT SPECIFICALLY MENTIONED, PAINT THE SAME AS SIMILAR ADJACENT MATERIALS OR SURFACES. IF COLOR OR FINISH IS NOT DESIGNATED, THE OWNER'S REPRESENTATIVE WILL SELECT FROM STANDARD COLORS OR FINISHES AVAILABLE.

    1) PAINTING INCLUDES FIELD PAINTING EXPOSED BARE AND COVERED PIPES AND DUCTS (INCLUDING COLOR CODING), HANGERS, EXPOSED STEEL AND IRON WORK, AND PRIMED METAL SURFACES OF MECHANICAL AND ELECTRICAL EQUIPMENT.
26. ALL MECHANICAL PIPING SYSTEMS, DUCTS, CONTROLS, VALVES, APPARATUS, ETC., EXCEPT THOSE THAT ARE INSTALLED IN INACCESSIBLE LOCATIONS IN PARTITIONS, WALLS, AND FLOORS, AND THOSE BURIED UNDERGROUND, SHALL BE PERMANENTLY MARKED AND IDENTIFIED AS INDICATED IN THE RELATED SPECIFICATIONS.
27. UNLESS SPECIFICALLY SHOWN ON THESE PLANS NO STRUCTURAL MEMBER SHALL BE CUT, DRILLED NOR NOTCHED WITHOUT PRIOR WRITTEN AUTHORIZATION FROM THE STRUCTURAL ENGINEER AND THE DISTRICT STRUCTURAL ENGINEER FROM THE DIVISION OF THE STATE ARCHITECT.
28. CONTRACTOR TO BALANCE THE AIRFLOW FOR THE HVAC UNITS AND ALSO CHECK PROPER OPERATION OF THE ECONOMIZER/ POWER EXHAUST TO MAINTAIN 0.02 INCHES MAXIMUM DIFFERENTIAL PRESSURE AT EACH DOOR TO MEET THE ADA REQUIREMENTS FOR DOOR OPENING/CLOSURE OF NO MORE THAN 5 POUNDS. CONTRACTOR TO MAKE NECESSARY ADJUSTMENTS TO MEET THESE REQUIREMENTS

----- CONTROLS -----

1. CONTROL SCHEMATICS ARE FOR SEQUENCE ONLY. REFER TO ELECTRICAL DRAWINGS AND SPECIFICATIONS FOR ALL ELECTRICAL DEVICES REQUIRED.
2. ALL LINE VOLTAGE WIRING SHALL BE INSTALLED IN CONDUIT. ALL LINE VOLTAGE CONDUIT AND WIRING, INCLUDING FINAL CONNECTIONS, SHALL BE FURNISHED AND INSTALLED BY THE ELECTRICAL CONTRACTOR AS INDICATED ON THE ELECTRICAL DRAWINGS OR SPECIFIED IN THE ELECTRICAL SECTION OF THE SPECIFICATIONS. ALL ELECTRICAL WORK SHALL BE INSTALLED IN ACCORDANCE WITH ALL APPLICABLE CODES AND REGULATIONS OF ALL GOVERNING BODIES HAVING JURISDICTION THEREOF.
3. ALL LOW VOLTAGE CONDUIT AND WIRING AS APPLICABLE, INCLUDING FINAL CONNECTIONS, SHALL BE FURNISHED AND INSTALLED BY THE MECHANICAL CONTRACTOR AS INDICATED ON THE MECHANICAL DRAWINGS.

    A1) ALL LOW VOLTAGE WIRING SHALL BE INSTALLED IN CONDUIT.

    A2) ALL LOW VOLTAGE WIRING SHALL BE PLENUM – RATED.

    B) WHERE THE CONTROLS CONTRACTOR IS RETAINED BY THE OWNER, THEY SHALL BE RESPONSIBLE FOR THE FOLLOWING:

    1) FURNISH AND INSTALL ALL DEVICES, WIRING, AND TERMINATIONS REQUIRED FOR A COMPLETE AND FUNCTIONAL INSTALLATION.

    2) COORDINATE ALL WORK AND REQUIREMENTS WITH OTHER TRADES INCLUDING GENERAL, MECHANICAL, AND ELECTRICAL CONTRACTORS PRIOR TO BID.

    3) CONTRACTOR SHALL FOLLOW ALL SUBMITTAL REQUIREMENTS PER DRAWINGS.
4. CONTRACTOR SHALL BE RESPONSIBLE FOR ORDERING AIR CONDITIONING EQUIPMENT WITH THRU-THE-BASE POWER, CONTROL, AND GAS CONNECTIONS. VERIFY ALL CONNECTION LOCATIONS WITH UNIT MANUFACTURER AND COORDINATE WITH OTHER TRADES AS NECESSARY.
5. ELECTRICAL CONTRACTOR SHALL PROVIDE REQUIRED RELAY ACCESSORIES FOR CONNECTION OF 120 VOLT 1 PHASE VENTILATION EQUIPMENT TO 277 VOLT 1 PHASE LIGHTING AS APPLICABLE.
6. ALL THERMOSTATS SHALL HAVE LOCKABLE COVERS (WHERE INDICATED ON PLANS) AND SHALL BE OF THE ELECTRONIC, PROGRAMMABLE, AUTOMATIC CHANGEOVER TYPE TO SEQUENCE HEATING OR COOLING. SET POINT RANGE SHALL BE 10 DEGREES F. BETWEEN FULL HEATING AND COOLING. THEY SHALL HAVE CAPABILITY OF TERMINATING ALL HEATING AT A TEMPERATURE NO MORE THAN 70 DEGREES F., AND COOLING AT A TEMPERATURE NOT LESS THAN 78 DEGREES F. ADJUSTABLE TEMPERATURE DIFFERENTIAL SHALL BE 1– 1/2 DEGREES F. CONTROL LIMITS SHALL BE FROM 55 DEGREES F. TO 85 DEGREES F. MOUNT AT 48 INCHES ABOVE FLOOR OR AS REQUIRED BY LOCAL AUTHORITIES OR HANDICAP CODES.

    NOTES: 1) THERMOSTATS THAT ARE PART OF AN ENERGY MANAGEMENT SYSTEM SHALL FOLLOW CONTROL SPECIFICATIONS AND DRAWING REQUIREMENTS.

    2) SHOULD THE LOCATION OF THE THERMOSTAT NOT MEET THE ADA HEIGHT REQUIREMENTS DUE TO OBSTRUCTIONS, THEN AN ALTERNATE LOCATION SHALL BE PROPOSED OR REQUESTED BY THE CONTRACTOR THAT SHALL BE APPROVED BY THE ENGINEER AND ARCHITECT.
7. LINE VOLTAGE THERMOSTATS SHALL BE FURNISHED BY THE MECHANICAL CONTRACTOR AND INSTALLED BY THE ELECTRICAL CONTRACTOR.
8. CONTROLS CONTRACTOR AND AIR BALANCE CONTRACTOR SHALL COORDINATE WORK AND PERFORM NECESSARY TASKS AS REQUIRED TO OBTAIN AIR AND WATER FLOW QUANTITIES FOR SYSTEMS SHOWN HEREIN.

    CONTROLS SHALL BE PROVIDED TO PROVIDE THE MINIMUM RATE OF OUTDOOR AIR REQUIRED BY THE STATE ENERGY REGULATIONS.
9. ----- AIR DISTRIBUTION -----
1. ALL DUCTWORK SHALL BE SHEET METAL CONSTRUCTED OR SPIRAL ERECTED, AND TESTED IN ACCORDANCE WITH THE MOST RESTRICTIVE OF LOCAL REGULATIONS, PROCEDURES DETAILED IN THE ASHRAE HANDBOOK OF FUNDAMENTALS, CHAPTER 6 OF THE MECHANICAL CODE, OR THE APPLICABLE STANDARDS ADOPTED BY THE SHEET METAL AND AIR CONDITIONING CONTRACTORS NATIONAL ASSOCIATION.
2. CONTRACTOR SHALL PROVIDE EXTERIOR MANUAL VOLUME DAMPER HANDLES W/ LOCK-DOWN AFTER COMPLETING AIR BALANCE & OBTAIN FINAL APPROVAL FROM ENGINEER.
3. ALL FLEXIBLE DUCTWORK SHALL NOT EXCEED SEVEN FEET IN LENGTH TO RESPECTIVE DIFFUSERS, GRILLES, AND REGISTERS, OR OTHER AIR DEVICES.
4. PROVIDE SEISMIC RESTRAINTS TO ALL DUCTWORK, PIPE, AND EQUIPMENT SUPPORTS IN ACCORDANCE WITH THE LATEST SMACNA GUIDELINES FOR SEISMIC RESTRAINT OF MECHANICAL SYSTEMS. SUSPENDED EQUIPMENT SHALL BE PROVIDED WITH SEISMIC ANCHORAGE AND ISOLATION SUPPORTS.
5. ALL DUCT TURNS IN SUPPLY, RETURN, AND EXHAUST DUCTS SHALL HAVE SINGLE WALL TURNING VANES WITH TRAILING EDGE, UNLESS OTHERWISE NOTED.
6. DUCTWORK HANDLING CONDITIONED AIR SHALL BE INSULATED OR LINED AS INDICATED ON DRAWINGS. SUPPLY AND RETURN DUCT INSULATION SHALL BE MIN. 2" THICK, 1.5 LB./CUBIC FT. DENSITY AND HAVE A MIN. VALUE OF R-8 WHERE LOCATED IN ONE OR MORE OF THE FOLLOWING SPACES:

    A) OUTDOORS, OR

    B) IN A SPACE BETWEEN THE ROOF AND AN INSULATED CEILING, OR

    C) IN A SPACE DIRECTLY UNDER A ROOF WITH FIXED VENTS OR OPENINGS TO THE OUTSIDE OR UNCONDITIONED SPACES, OR

    D) IN AN UNCONDITIONED CRAWLSPACE; OR

    E) IN OTHER UNCONDITIONED SPACES

    PER 2016 CEC, OTHERWISE PROVIDE R-6.2 WHEN LOCATED IN CONDITIONED ATTIC SPACES ABOVE CEILINGS . ALL DUCTWORK EXPOSED ON ROOF SHALL BE INTERNALLY LINED WITH 2" THICK, 1.5LB./CUBIC FT. DENSITY DUCT LINER UNLESS OTHERWISE INDICATED OR SPECIFIED. ALL DUCT SIZES ARE NET CLEAR INSIDE DIMENSIONS. ALL DUCT JOINTS SHALL BE SEALED PER CHAPTER 6 MECHANICAL CODE REQUIREMENTS. PROVIDE PIPING AND DUCT INSULATION IN ACCORDANCE WITH THE LATEST STANDARDS OF THE CALIFORNIA ENERGY COMMISSION.
7. ALL INSULATION SHALL HAVE A FLAME SPREAD OF NOT MORE THAN 25 AND A SMOKE DENSITY NOT EXCEEDING 50.
8. MANUAL VOLUME DAMPERS SHALL BE PROVIDED IN ALL DUCT BRANCHES TO INDIVIDUAL DIFFUSERS, GRILLES, AND REGISTERS, AS WELL AS FRESH AIR INTAKE DUCTS. DAMPERS SHALL BE LOCATED AT THE BRANCH DUCT LOCATIONS. THE MECHANICAL CONTRACTOR SHALL COORDINATE LOCATIONS OF DAMPERS WITH THE AIR BALANCE CONTRACTOR PRIOR TO BID, SO THEY ARE ACCESSIBLE PRIOR TO INSTALLATION. IN LOCATIONS WHERE THESE DAMPERS ARE INACCESSIBLE, CABLE OPERATED ADJUSTMENT CONTROLS SHALL BE PROVIDED AT NO ADDITIONAL COST. OPPOSED BLADE DAMPERS SHALL NOT BE PERMITTED UNLESS NOTED OTHERWISE.
9. AUTOMATIC SMOKE FIRE DAMPER REQUIREMENTS ARE AS FOLLOWS:

    A) PROVIDE AUTOMATIC SMOKE FIRE DAMPERS AT ALL PENETRATIONS OF FIRE-RATED CEILINGS AND WALLS THROUGHOUT. CONTRACTOR SHALL COORDINATE FIRE-RATED AREAS WITH THE MECHANICAL DRAWINGS AND OTHER TRADES PRIOR TO INSTALL AND SHALL NOTIFY PERTINENT PARTIES PRIOR TO ANY WORK PERFORMED IN THESE AREAS. IN ADDITION, CONTRACTOR SHALL BE RESPONSIBLE TO PROVIDE PROPER ACCESS FOR DAMPERS INSTALLED. THE DAMPER FIRE RATING SHALL BE COMPATIBLE WITH THE CEILING/WALL RATING.

    B) LOCATION OF FIRE-RATED CEILINGS AND WALLS ARE AS INDICATED ON THE MECHANICAL DRAWINGS.

    C) FIRE AND/OR SMOKE DAMPER(S) SHALL BE PROVIDED AS REQUIRED BY THE LATEST CALIFORNIA BUILDING CODE.

    D) CONTRACTOR SHALL FURNISH FLUSH MOUNTED FIRE AND/OR SMOKE DAMPERS, SO THAT DAMPER DO NOT EXTEND PASS WALLS, FOR AREAS WITHOUT CEILINGS FOR QUALITY WORKMANSHIP.
10. CONTRACTOR SHALL PERFORM MAINTENANCE ON ALL EXISTING FIRE AND SMOKE/FIRE DAMPERS PER MANUFACTURER'S PROVISIONS. ANY FAILURES OR NON-OPERATING DAMPERS SHALL BE REPLACED AND SHALL CONFORM TO CURRENT CODE REGULATIONS.
11. ALL DUCTWORK PASSING THROUGH FIRE RATED CORRIDORS AND LOBBIES SHALL BE MIN. 26 GAGE SHEET METAL CONSTRUCTION.
12. ALL DUCTWORK, PIPING, CONDUIT, & ETC. PENETRATING FIRE RATED CONSTRUCTION SHALL HAVE APPROVED FIRE STOPPING.
13. UNLESS OTHERWISE NOTED THE CONTRACTOR SHALL BE RESPONSIBLE FOR FURNISHING AND INSTALLING EXTERIOR LOUVERS CALLED OUT HEREIN. COORDINATE SIZE(S) AND LOCATION(S) WITH OTHER TRADES AS NECESSARY PRIOR TO BID.

----- ROOFING -----

1. CONTRACTOR TO REMOVE (E) ROOFING AS REQUIRED AND RE-ROOF OVER NEW EQUIPMENT PAD WITH MEMBRANE TO MATCH (E). NEW ROOF MEMBRANE TO TIE INTO (E) MEMBRANE PER MEMBRANE MANUFACTURER'S REQUIREMENTS.

LEGEND

SYMBOL	ABBR.	DESCRIPTION
	–	SUPPLY AIR RISER
	–	RETURN AIR RISER
	–	EXHAUST AIR RISER
	SAG	SUPPLY AIR GRILLE
	RAG	RETURN AIR GRILLE
	EAG	EXHAUST AIR GRILLE
	SWR	SIDEWALL REGISTER
	(L)	LINED DUCTWORK
	–	FLEXIBLE CONNECTION
	FC	FLEXIBLE CONNECTION
	–	NEW DUCT (SEE PLAN)
	–	EXISTING DUCT (SEE PLAN)
	–	DEMO DUCT (SEE PLAN)
	MVD	MANUAL VOLUME DAMPER
	BDD	BACKDRAFT DAMPER
S/F	SFD	SMOKE / FIRE DAMPER
F	FD	FIRE DAMPER
	DL	DOOR LOUVER
U.C.	UC	UNDERCUT DOOR 3/4"
RS	RS	REFRIGERANT SUCTION LINE
RL	RL	REFRIGERANT LIQUID LINE
CD	CD	CONDENSATE DRAIN
	S.D.	SMOKE DETECTOR
	P.O.C.	POINT OF CONNECTION
	T-STAT	THERMOSTAT
H	H	HUMIDISTAT
TS	TS	TEMPERATURE SENSOR
OS	OS	OVERRIDE SWITCH
PD	PD	PRESSURE DIFFERENTIAL SWITCH
S	S	SWITCH
	O.C.	ON CENTER
	HWR	HOT-WATER RETURN
	HWS	HOT-WATER SUPPLY
	I.D.	INSIDE DIAMETER
	O.D.	OUTSIDE DIAMETER
	W/	WITH
	S/M	SHEET METAL
	S/S	STAINLESS STEEL
	G.C.	GENERAL CONTRACTOR
	VTR	VENT THRU ROOF
	EMS	ENERGY MANAGEMENT SYSTEM
	OBD	OPPOSED BLADE DAMPER
	FSC	FAN SPEED CONTROL
E	E	ITEMS FURNISHED AND INSTALLED BY ELECTRICAL CONTRACTOR AS SPECIFIED ON THE ELECTRICAL CONTRACT DOCUMENTS
M	M	ITEMS FURNISHED AND INSTALLED BY MECHANICAL CONTRACTOR AS SPECIFIED ON THE MECHANICAL CONTRACT DOCUMENTS
EM	EM	ITEMS FURNISHED BY ELECTRICAL CONTRACTOR AND INSTALLED BY MECHANICAL CONTRACTOR.
ME	ME	ITEMS FURNISHED BY MECHANICAL CONTRACTOR AND INSTALLED BY ELECTRICAL CONTRACTOR.
	C.C.	CONTROLS CONTRACTOR
	CBD	COUNTER-BALANCE DAMPER
DS	D.S.	DOOR SWITCH

SHEET INDEX

S.NO.	SHEET No.	SHEET TITLE
1	M-01	MECHANICAL GENERAL NOTE AND LEGEND
2	M-02	MECHANICAL SCHEDULES
3	M-2.0	MECHANICAL BUILDING A DEMOLITION AND REMODEL PLANS
4	M-2.1	MECHANICAL BUILDING C DEMOLITION AND REMODEL PLANS
5	M-2.2	MECHANICAL BUILDING D DEMOLITION AND REMODEL PLANS
6	M-2.3	MECHANICAL BUILDING E DEMOLITION AND REMODEL PLANS
7	M-2.4	MECHANICAL BUILDING F DEMOLITION AND REMODEL PLANS
8	M-2.5	MECHANICAL BUILDING G DEMOLITION AND REMODEL PLANS
9	M-2.6	MECHANICAL BUILDING K DEMOLITION AND REMODEL PLANS
10	M-3.1	MECHANICAL SECTIONS
11	M-4.1	MECHANICAL DETAILS
12	M-4.3	MECHANICAL DETAILS
13	M-4.4	MECHANICAL DETAILS
14	M-5.1	MECHANICAL CONTROLS
15	M-5.2	MECHANICAL CONTROLS
16	M-5.3	MECHANICAL CONTROLS
17	M-5.4	MECHANICAL CONTROLS
18	M-5.5	MECHANICAL CONTROLS
19	M-6.0	TITLE 24 BUILDING A
20	M-6.1	TITLE 24 BUILDING C
21	M-6.2	TITLE 24 BUILDING D
22	M-6.3	TITLE 24 BUILDING E
23	M-6.4	TITLE 24 BUILDING F
24	M-6.5	TITLE 24 BUILDING G
25	M-6.6	TITLE 24 BUILDING K

PIPING, DUCTWORK, AND ELECTRICAL DISTRIBUTION SYSTEM BRACING NOTE

PIPING, DUCTWORK AND ELECTRICAL DISTRIBUTION SYSTEMS SHALL BE BRACED TO COMPLY WITH THE FORCES AND DISPLACEMENTS PRESCRIBED IN ASCE 7-10 SECTION 13.3.3 AS DEFINED IN ASCE 7-10 SECTION 13.6.5.6, 13.6.7. 13.6.8 AND 2016 CBC, SECTIONS 1616A.1.24, 1616A.1.25, AND 1616A.1.26.

THE METHOD OF SHOWING BRACING AND ATTACHMENTS TO THE STRUCTURE FOR THE IDENTIFIED DISTRIBUTION SYSTEM ARE AS NOTED BELOW. WHEN BRACING AND ATTACHMENTS ARE BASED ON A PREAPPROVED INSTALLATION GUIDE (E.G. SMACNA OR OSHPD OPM), COPIES OF THE BRACING SYSTEM INSTALLATION GUIDE OR MANUAL SHALL BE AVAILABLE ON THE JOBSITE PRIOR TO THE START OF AND DURING THE HANGING AND BRACING OF THE DISTRIBUTION SYSTEMS. THE STRUCTURAL ENGINEER OF RECORD SHALL VERIFY THE ADEQUACY OF THE STRUCTURE TO SUPPORT THE HANGER AND BRACE LOADS.

MECHANICAL PIPING (MP), MECHANICAL DUCTS (MD), PLUMBING PIPING (PP), ELECTRICAL DISTRIBUTION SYSTEMS (E):

MPX MD_ PP_ E_ – OPTION 1: DETAILED ON THE APPROVED DRAWINGS WITH PROJECT SPECIFIC NOTES AND DETAILS.

MP_ MD_ PP_ E_ – OPTION 2: SHALL COMPLY WITH THE APPLICABLE DRAWINGS WITH PROJECT SPECIFIC NOTES AND DETAILS.

MP_ MD_ PP_ E_ – OPTION 3: SHALL COMPLY WITH THE SMACNA SEISMIC RESTRAINT MANUAL, OSHPD EDITION (2009), INCLUDING ANY ADDENDA. FASTENERS AND OTHER ATTACHMENTS NOT SPECIFICALLY IDENTIFIED IN THE SMACNA SEISMIC RESTRAINT MANUAL, OSHPD EDITION, ARE DETAILED ON THE APPROVED DRAWINGS WITH PROJECT SPECIFIC NOTES AND DETAILS. THE DETAILS SHALL ACCOUNT FOR THE APPLICABLE SEISMIC HAZARD LEVEL_____ AND THE CONNECTION LEVEL_____ FOR THE PROJECT AND CONDITIONS. .

MEP COMPONENT ANCHORAGE NOTE

ALL MECHANICAL, PLUMBING AND ELECTRICAL COMPONENTS SHALL BE ANCHORED AND INSTALLED PER THE DETAILS ON THE DSA APPROVED CONSTRUCTION DOCUMENTS. WHERE NO DETAIL IS INDICATED, THE FOLLOWING COMPONENTS SHALL BE ANCHORED OR BRACED TO MEET THE FORCE AND DISPLACEMENT REQUIREMENTS PRESCRIBED IN THE 2016 CBC, SECTION 1616A.1.18 THROUGH 1616A.1.26 AND ASCE 7-10 CHAPTER 13, 26 AND 30.

1. ALL PERMANENT EQUIPMENT AND COMPONENTS.
2. TEMPORARY OR MOVABLE EQUIPMENT THAT IS PERMANENTLY ATTACHED (e.g. HARD WIRE) TO THE BUILDING UTILITY SERVICES SUCH AS ELECTRICITY, GAS OR WATER.
3. MOVABLE EQUIPMENT WHICH IS STATIONED IN ONE PLACE FOR MORE THAN 8 HOURS AND HEAVIER THAN 400 POUNDS ARE REQUIRED TO BE ANCHORED WITH TEMPORARY ATTACHMENTS.

THE ATTACHMENT OF THE FOLLOWING MECHANICAL AND ELECTRICAL COMPONENTS SHALL BE POSITIVELY ATTACHED TO THE STRUCTURE, BUT NEED NOT BE DETAILED ON THE PLANS. THE PROJECT INSPECTOR WILL VERIFY THAT THESE ITEMS HAVE BEEN POSITIVELY ATTACHED. THESE COMPONENTS SHALL HAVE FLEXIBLE CONNECTIONS PROVIDED BETWEEN THE COMPONENT AND ASSOCIATED DUCTWORK, PIPING AND CONDUIT.

A. COMPONENTS WEIGHING LESS THAN 400 POUNDS AND HAVE A CENTER OF MASS LOCATED 4 FEET OR LESS ABOVE THE ADJACENT FLOOR OR ROOF LEVEL THAT DIRECTLY SUPPORT THE COMPONENT.
B. COMPONENTS WEIGHING LESS THAN 20 POUNDS, OR IN THE CASE OF DISTRIBUTED SYSTEMS, LESS THAN 5 POUNDS PER FOOT, WHICH ARE SUSPENDED FROM A ROOF OR FLOOR OR HUNG FROM A WALL.

FOR THOSE ELEMENTS THAT DO NOT REQUIRE DETAILS ON THE APPROVED DRAW

VARIABLE AIR VOLUME BOX SCHEDULE

TAG	MFR. & MODEL #	AC UNIT	ROOM	SIZE, IN.		CFM		WEIGHT (LB)	ANCHORAGE DETAIL	REMARKS
				INLET	OUTLET	MAX	MIN			
VAV1 C	CARRIER 35E12	AC1 C	CLASSROOM 103C	12	16"X14"	1,400	350	35	3 S1.0 / 11 M-4.7	1
VAV2 C	CARRIER 35E12	AC1 C	CLASSROOM 104C	12	16"X14"	1,400	350	35	3 S1.0 / 11 M-4.7	1
VAV3 C	CARRIER 35E12	AC1 C	CLASSROOM 105C	12	16"X14"	1,400	350	35	3 S1.0 / 11 M-4.7	1
VAV4 C	CARRIER 35E12	AC1 C	CLASSROOM 112C	12	16"X14"	1,400	350	35	3 S1.0 / 11 M-4.7	1
VAV5 C	CARRIER 35E	AC1 C	CLASSROOM 113C	12	16"X14"	1,400	350	35	3 S1.0 / 11 M-4.7	1
VAV6 C	CARRIER 35E	AC1 C	CLASSROOM 114C	12	16"X14"	1,400	350	35	3 S1.0 / 11 M-4.7	1
VAV1 D	CARRIER 35E	AC1 D	CLASSROOM 103D	12	16"X14"	1,400	350	35	3 S1.0 / 11 M-4.7	1
VAV2 D	CARRIER 35E	AC1 D	CLASSROOM 104D	12	16"X14"	1,400	350	35	3 S1.0 / 11 M-4.7	1
VAV3 D	CARRIER 35E	AC1 D	CLASSROOM 105D	12	16"X14"	1,400	350	35	3 S1.0 / 11 M-4.7	1
VAV4 D	CARRIER 35E	AC1 D	CLASSROOM 112D	12	16"X14"	1,400	350	35	3 S1.0 / 11 M-4.7	1
VAV5 D	CARRIER 35E	AC1 D	CLASSROOM 113D	12	16"X14"	1,400	350	35	3 S1.0 / 11 M-4.7	1
VAV6 D	CARRIER 35E	AC1 D	CLASSROOM 114D	12	16"X14"	1,400	350	35	3 S1.0 / 11 M-4.7	1
VAV1 F	CARRIER 35E	AC1 F	CLASSROOM 103F	12	16"X14"	1,400	350	35	3 S1.0 / 11 M-4.7	1
VAV2 F	CARRIER 35E	AC1 F	CLASSROOM 104F	12	16"X14"	1,400	350	35	3 S1.0 / 11 M-4.7	1
VAV3 F	CARRIER 35E	AC1 F	CLASSROOM 105F	12	16"X14"	1,400	350	35	3 S1.0 / 11 M-4.7	1
VAV4 F	CARRIER 35E	AC1 F	CLASSROOM 109F	12	16"X14"	1,400	350	35	3 S1.0 / 11 M-4.7	1
VAV5 F	CARRIER 35E	AC1 F	CLASSROOM 110F	12	16"X14"	1,400	350	35	3 S1.0 / 11 M-4.7	1
VAV6 F	CARRIER 35E	AC1 F	CLASSROOM 111F	12	16"X14"	1,400	350	35	3 S1.0 / 11 M-4.7	1
VAV1 G	CARRIER 35E	AC1 G	CLASSROOM 108G	12	16"X14"	1,350	350	35	3 S1.0 / 11 M-4.7	1
VAV2 G	CARRIER 35E	AC1 G	CLASSROOM 107G	12	16"X14"	1,275	350	35	3 S1.0 / 11 M-4.7	1
VAV3 G	CARRIER 35E	AC1 G	CLASSROOM 108G	12	16"X14"	1,275	350	35	3 S1.0 / 11 M-4.7	1
VAV4 G	CARRIER 35E	AC1 G	SPEECHROOM 101G	6	12"X8"	250	50	23	3 S1.0 / 11 M-4.7	1
VAV1 K	CARRIER 35E	AC1 K	CLASSROOM 115K	12	16"X14"	2,000	400	35	3 S1.0 / 11 M-4.7	1
VAV2 K	CARRIER 35E	AC1 K	CLASSROOM 107K	14	16"X14"	2,800	560	43	3 S1.0 / 11 M-4.7	1
VAV3 K	CARRIER 35E	AC1 K	CLASSROOM 101K	12	16"X14"	2,000	400	35	3 S1.0 / 11 M-4.7	1

REMARKS

1. PROVIDE CARRIER ZS PRO SPACE SENSOR.

PACKAGED GAS/ELECTRIC A/C UNIT SCHEDULE

SYMBOL	MAKE	MODEL	TYPE	AC TONNAGE	COOLING CAPACITY		HEAT. INPUT	OSA	EER	SUPPLY FAN			ELECTRICAL				UNIT WT	ANCHORAGE DETAIL	CONTROL DETAIL	REMARKS
					SENSIBLE(MBH)	TOTAL (MBH)	CAP. (MBH)	CFM		ESP	CFM	BHP	VOLTS	PH	MCA	MOCP	(LBS)			
AC1 A	CARRIER	48VLNC60	CV	5T	57.08	42.14	90	400	–	0.6	2,000	0.97	208	1	38.3	60	460	6 M-4.7	1 M-5.7	2, 3, 4, 5
AC1 C	CARRIER	48LCDB24A7A5	VAV	20T	187.84	252.02	176	2,100	10.94	1.25	7,500	9.83	208	3	130.8	150	2650	10 M-4.7	2 M-5.7	1, 2, 4, 5
AC1 D	CARRIER	48LCDB24A6A5	VAV	20T	194.22	254.59	176	2,100	10.94	1.25	7,500	9.83	208	3	130.8	150	2650	9 M-4.7	2 M-5.7	1, 2, 4, 5, 8
AC1 F	CARRIER	48LCDB24A6A5	VAV	20T	194.22	254.59	176	2,100	10.94	1.25	7,500	9.83	208	3	130.8	150	2650	10 M-4.7	2 M-5.7	1, 2, 4, 5
AC1 G	CARRIER	48LCDB12A2A5	VAV	10T	90.52	120.45	144	1,100	13.0	1.25	3,750	2.62	208	3	54	60	2025	13 M-4.7	2 M-5.7	2, 4, 5, 6, 7
AC1 K	CARRIER	48LCDB20A7A5	VAV	17.5T	153.24	203.46	176	1,360	11.2	1.25	6,575	7.94	208	3	104.6	125	2500	10 M-4.7	2 M-5.7	1, 2, 4, 5

REMARKS:

1. FACTORY PROVIDE NON-MODULATING POWER EXHAUST HORIZONTAL APPLICATION MOUNTING RETURN AIR DUCT WITH DRY BULB ECONOMIZER. POWER EXHAUST POWERED FROM UNIT.
2. PROVIDE HORIZONTAL SUPPLY AND RETURN.
3. FRESH AIR HOOD
4. 2" FILTERS (MERV 8)
5. TIME GUARD II CONTROL CIRCUIT
6. CONTRACTOR TO PROVIDE M.W. SAUSSE & CO., INC. 14" HIGH AC CURB AND MANUFACTURER STAMPED STRUCTURAL CALCULATION. (SEE M-4.3).
7. PROVIDE CANFAB MODULATING POWER EXHAUST HORIZONTAL APPLICATION MOUNTING AC UNIT WITH DRY BULB ECONOMIZER. PROVIDE SEPARATE POWER FOR CANFAN MODULATING POWER (MCA- 11.38 / MOCP - 20.48).
8. CONTRACTOR TO PROVIDE M.W. SAUSSE & CO., INC. CUSTOM 30" HIGH AC CURB WITH RETURN DUCT THRU CURB AND MANUFACTURER STAMPED STRUCTURAL CALCULATION. (SEE M-4.4).

NOTES

1. CONTRACTOR TO VERIFY FINAL UNIT LOCATIONS PRIOR TO INSTALLATION.
2. ELECTRICAL SHALL PROVIDE ONE DISCONNECT SWITCH AND SINGLE FEED FOR UNIT AND POWER EXHAUST.
3. POWER EXHAUST FLA AND MCA INCLUDED IN SCHEDULE EXCEPT AC1/G. SEE REMARK 7.

AIR DISTRIBUTION SCHEDULE

SYM.	MFR. & MODEL #	NECK SIZE	CFM RANGE	MAX. NECK VELOCITY	MAX. N.C.	S.P. DROP	TYPE	DAMPER	REMARKS
– SD-1	KRUEGER 1240	8"x8" 10"x10" 12"x12" 14"x14" 16"x16" 18"x18"	0-170 171-270 271-390 391-540 541-700 701-900	400	30	.06	MODULAR	NONE	FRAME 23 FOR T-BAR
– RG-3	KRUEGER EGC5	48"X24"	0-3600	400	30	.03	EGG-CRATE	NONE	–

LEGEND

400 / SD-1 — CFM / AIR DISTRIBUTION DEVICE

SD	SUPPLY DIFFUSER
RG	RETURN GRILLE
TG	TRANSFER GRILLE
EG	EXHAUST GRILLE

ZONE AND BYPASS DAMPER SCHEDULE

SYM	MFR & MODEL #	AC UNIT	AREA SERVICED	CFM		MIN. S.P.	INLET SIZE	WT	REMARKS
				MAX.	MIN.				
ZD 1	CARRIER 35E	ACB 1	RECEPTION/WAITING 101/102	1,400	350	0.05	16"ø	47	1
ZD 2	CARRIER 35E	ACB 1	CONFERENCE 106	1,400	350	0.05	16"ø	47	1
ZD 3	CARRIER 35E	ACB 1	OFFICE 104	1,400	350	0.05	16"ø	47	1
ZD 4	CARRIER 35E	ACB 1	OFFICE 103	1,400	350	0.05	16"ø	47	1
BD 1	CARRIER	ACB 1	SEE PLAN	1,400	350	0.05	16"ø	47	2

1. PROVIDE OPN-VVTZC ZONE DAMPER CONTROLLER
2. PROVIDE CARRIER BYPASS DAMPER CONTROLLER

WLC ARCHITECTS
CLIENT FOCUSED • PASSION DRIVEN
SOUTHERN CALIFORNIA
8163 ROCHESTER AVENUE, SUITE 100
RANCHO CUCAMONGA
CALIFORNIA 91730-0729
TEL: 909-987-0909
www.wlcarchitects.com

LONGFELLOW ELEMENTARY SCHOOL HVAC REPLACEMENT

COMPTON UNIFIED SCHOOL DISTRICT
1101 S DWIGHT AVE.
COMPTON, CA 90220

LICENSED ARCHITECT — MARK GRAHAM C-26046 03-31-19 — STATE OF CALIFORNIA

REGISTERED PROFESSIONAL ENGINEER — RAJEEV BANERJEE No. M29253, Exp. 6/30/19 — MECHANICAL — STATE OF CALIFORNIA

CONSULTANT

IDENTIFICATION STAMP
DIV. OF THE STATE ARCHITECT
OFFICE OF REGULATION SERVICES
APPL 03-118423
AC — FLS — SS — EY
DATE MAR 06 2018
FILE: 19-23

NO	DATE	BY	DESCRIPTION
1			REVISIONS

DRAWN: KC | CHECKED:
DATE: 3/6/2018 | SCALE:
PROJECT NUMBER: 570064

MECHANICAL SCHEDULES

DRAWING NUMBER: M-02

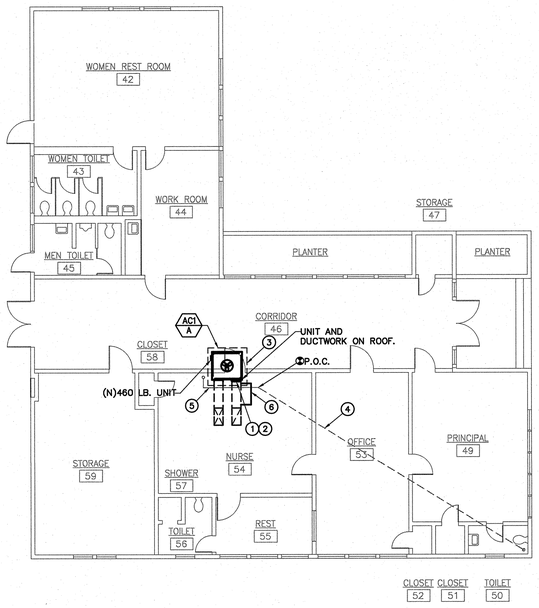

NORTH

BUILDING A - REMODEL FLOOR PLAN | 1/8" = 1'-0" | 1

CONSTRUCTION KEY NOTES:

1. CONTRACTOR TO PROVIDE FLEX. DUCT BETWEEN NEW AC UNIT AND EXISTIGN DUCTWORK. PROVIDE ALL DUCT TRANSITION AS REQUIRED TO CONNECT EXISTING DUCTWORK.
2. CONTRACTOR TO PROVIDE EXTENSION ON GAS PIPING AND CONDENSATE AS REQUIRED AND CONNECT EXISTING GAS AND CONDENSATE DRAIN TO NEW AC UNITS. PROVIDE A NEW VENTED P TRAP IF NECESSARY.
3. EXISTING EQUIPMENT PLATFORM. SEE STRUCTURAL SHEET DETAIL #2/S1.0 AND #6/M-4.1.
4. PARTIAL EXISTING CONDENSATE DRAIN TO REMAIN.
5. NEW CONDENSATE DRAIN.
6. NEW O.S.A. HOOD TO BE PROVIDED.

CONSTRUCTION NOTES:

1. FRESH AIR INTAKE(S) SHALL BE 10'-0"(MIN.) AWAY OR 3'-0" (MIN.) BELOW ANY EXHAUST OUTLET, PLUMBING VENT, OR FLUE.

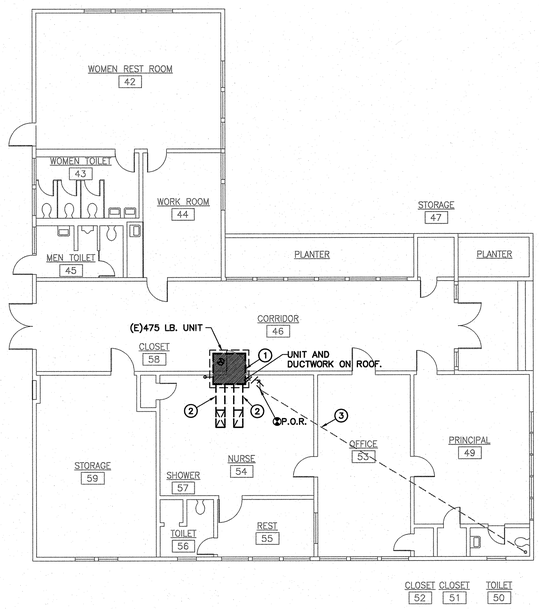

NORTH

BUILDING A - DEMOLITION FLOOR PLAN | 1/8" = 1'-0" | 2

DEMOLITION KEY NOTES:

1. EXISTING AC UNIT AND ALL RELATED ACCESSORIES TO BE REMOVED AND WITH NEW. EXISTING EQUIPMENT FLATFORM TO REMAIN.
2. EXISTING SUPPLY AND RETURN DUCTWORK TO REMAIN.
3. PARTIAL EXISTING CONDENSATE DRAIN TO REMAIN.

DEMOLITION NOTES:

1. OWNER SHALL HAVE FIRST RIGHT OF REFUSAL ON ALL ITEMS TO BE REMOVED. CONTRACTOR SHALL VERIFY ALL SUCH ITEMS WITH OWNER PRIOR TO REMOVAL. ALL ITEMS NOT REFUSED BY OWNER SHALL BE REMOVED INTACT AND FULLY FUNCTIONAL BY CONTRACTOR AND RETURNED TO OWNER. ALL ITEMS REFUSED BY OWNER SHALL BE PROPERLY DISPOSED OF BY CONTRACTOR.
2. PLUMBING CONTRACTOR SHALL DISCONNECT EXISTING GAS AND CONDENSATE DRAIN PIPES FROM MECHANICAL EQUIPMENT TO BE REMOVED AND REPLACED — AS REQUIRED FOR NEW CONNECTION TO NEW AC UNIT.
3. CONTRACTOR SHALL RE-USE EXISTING OPENINGS IN WALLS AND ROOF. COORDINATE WITH OTHER TRADES AS NECESSARY.
4. GENERAL CONTRACTOR SHALL PATCH ALL OPENINGS IN WALLS, ROOF, ETC. THAT WILL NOT BE REUSED FOR FUTURE WORK. COORDINATE AS NECESSARY WITH OTHER TRADES.
5. PRIOR TO ANY WORK BEING DONE CONTRACTOR SHALL MAKE A CAREFUL EVALUATION OF THE EXISTING CONDITIONS AND VERIFY ALL METHODS OF REMOVAL AND INSTALLATION OF MECHANICAL EQUIPMENT.
6. CONTRACTOR SHALL COORDINATE ALL DEMOLITION WORK WITH THE WORK OF ALL OTHER TRADES
7. PATCH ROOF AS NECESSARY. PATCH FLASHINGS AS NECESSARY.

WLC ARCHITECTS
CLIENT FOCUSED • PASSION DRIVEN
SOUTHERN CALIFORNIA
8163 ROCHESTER AVENUE, SUITE 100
RANCHO CUCAMONGA
CALIFORNIA 91730-0729
TEL: 909-987-0909
www.wlcarchitects.com

LONGFELLOW ELEMENTARY SCHOOL HVAC REPLACEMENT

COMPTON UNIFIED SCHOOL DISTRICT
1101 S DWIGHT AVE.
COMPTON, CA 90220

LICENSED ARCHITECT — MARC GRAHAM — C-26046 — 03-31-19 — STATE OF CALIFORNIA
REGISTERED PROFESSIONAL ENGINEER — BRIAN BAKER — No. M29253 — Exp. 6/30/19 — MECHANICAL — STATE OF CALIFORNIA

CONSULTANT

IDENTIFICATION STAMP
DIV. OF THE STATE ARCHITECT
OFFICE OF REGULATION SERVICES
APPL 03-118423
AC — FLS — SS EY
DATE MAR 01 2019
R.E.: 19-23

NO	DATE	BY	DESCRIPTION
1			REVISIONS

DRAWN: KC | CHECKED:
DATE: 3/6/2018 | SCALE:
PROJECT NUMBER: 570064

BUILDING A DEMO AND REMODEL FLOOR PLANS

DRAWING NUMBER: M-2.0

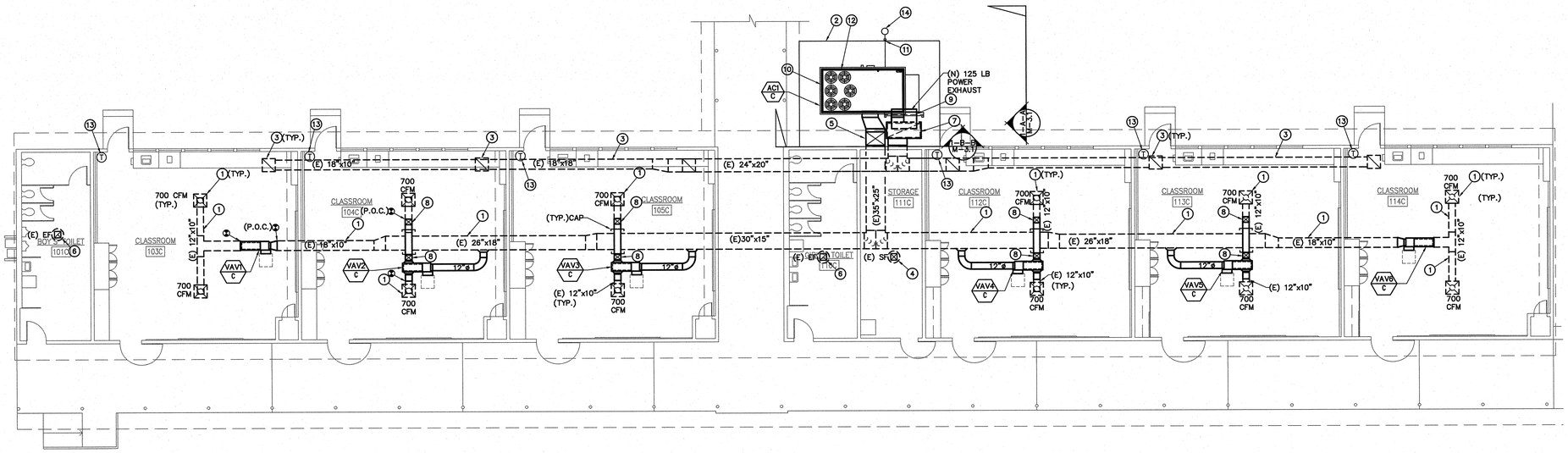

CONSTRUCTION KEY NOTES:

1. EXISTING MAIN SUPPLY DUCTWORK AND SUPPLY AIR DIFFUSERS TO REMAIN. SEE SHEET #2,#3, AND #4/M-4.1 FOR CEILING DIFFUSER AND DUCT SUPPORT DETAIL.
2. NEW FENCE AND CONCRETE PAD.
3. EXISTING MAIN RETURN DUCT AND GRILLES TO REMAIN SEE SHEET #2,#3, AND #4/M-4.1 FOR CEILING DIFFUSER AND DUCT SUPPORT DETAIL.
4. EXISTING SUPPLY FAN AND DUCTWORK TO REMAIN.
5. NEW 35"X25"(L) SUPPLLY AIR DUCT. 40"X28" SHEET METAL SIZES. SEE STRUCTURAL DETAIL SHEET #1/S2.1.
6. EXISTING EXHAUST FAN AND DUCTWORK TO REMAIN.
7. NEW 60"X26"(L) RETURN AIR DUCT. 64"X30" SHEET METAL SIZES. SEE STRUCTURAL DETAIL SHEET #1/S2.1.
8. CONTRACTOR TO OFFSET NEW (W) 12"X10" DUCT ABOVE MAIN SUPPLY DUCT.
9. POWER EXHAUST MOUNTED ON THE NEW RETURN DUCT. SEE STRUCTURAL DETAIL SHEET #1/S2.1.
10. NEW 20 TON AC UNIT WILL BE ON CONCRETE PAD. SEE DETAIL SHEET # 10/M-4.1 FOR PAD.
11. 3/4" CONDENSATE DRAIN TO DRY WELL. PROVIDE NEW VENTED P-TRAP IF NECESSARY.
12. CONTRACTOR TO PROVIDE EXTENSION ON GAS PIPING AS REQUIRED TO RECONNECT EXISTING GAS PIPING TO NEW AC UNIT.
13. ELECTRONIC EMS THERMOSTAT MOUNT AT 48" A.F.F. SEE DETAIL SHEET #7/M-4.1 FOR A/C CONTROL.
14. NEW DRY WELL. SEE DETAIL SHEET #5/M-4.1.

CONSTRUCTION NOTES:

1. CONTRACTOR SHALL COORDINATE WORK WITH OTHER TRADES AS NECESSARY PRIOR TO INSTALLATION.
2. CONTRACTOR SHALL MAINTAIN PROPER CLEARANCES FROM ALL ELECTRICAL EQUIPMENT AND SERVICE CLEARANCES FOR MECHANICAL EQUIPMENT.
4. FRESH AIR INTAKES SHALL BE 10'-0" MIN. AWAY FROM ALL EXHAUST OUTLETS, PLUMBING VENTS, AND FLUES.
5. CONTRACTOR SHALL COORDINATE EXACT EQUIPMENT PAD SIZES AND LOCATIONS WITH OTHER TRADES PRIOR TO INSTALLATION.
6. MAINTAIN MANUFACTURER MIN. CLEARANCES ON ALL AC UNITS.
7. BEFORE BIDDING ON THIS WORK, THE CONTRACTOR SHALL MAKE A CAREFUL EXAMINATION OF THE PREMISES, EXISTING EQUIPMENT AND SERVICES. HE SHALL DEFINITELY DETERMINE IN ADVANCE, THE METHODS OF INSTALLING AND CONNECTING THE NEW EQUIPMENT, DUCTWORK, AND PIPING THE MEANS TO BE PROVIDED FOR GETTING THE EQUIPMENT AND MATERIALS INTO PLACE AND SHALL MAKE HIMSELF THOROUGHLY FAMILIAR WITH ALL OF THE REQUIREMENTS OF THE PROJECT. FAILURE TO VSIT THE SITE WLL IN NO WAY RELIEVE THE SUCCESSFUL CONTRACTOR OF THE NECESSITY OF FURNISHING ANY MATERIAL OR PERFORMING ANY WORK THAT MAY BE REQUIRED TO COMPLETE THE WORK IN ACCORDANCE WITH THE DRAWINGS AND SPECIFICATIONS. THIS ADDITIONAL WORK SHALL BE PERFORMED WITHOUT ADDITIONAL COST TO THE OWNER.
8. BEFORE COMMENCEMENT OF WORK, THE CONTRACTOR SHALL VERIFY THE EXACT LOCATIONS AND DIMENSIONS OF ALL EXISTING EQUIPMENT AND ELECTRICAL SERVICES IN THE AREA OF CONSTRUCTION AND NOTIFY THE ENGINEER OF ANY DISCREPANCIES.

NORTH

BUILDING C - REMODEL FLOOR PLAN | 1/8" = 1'-0" | 1

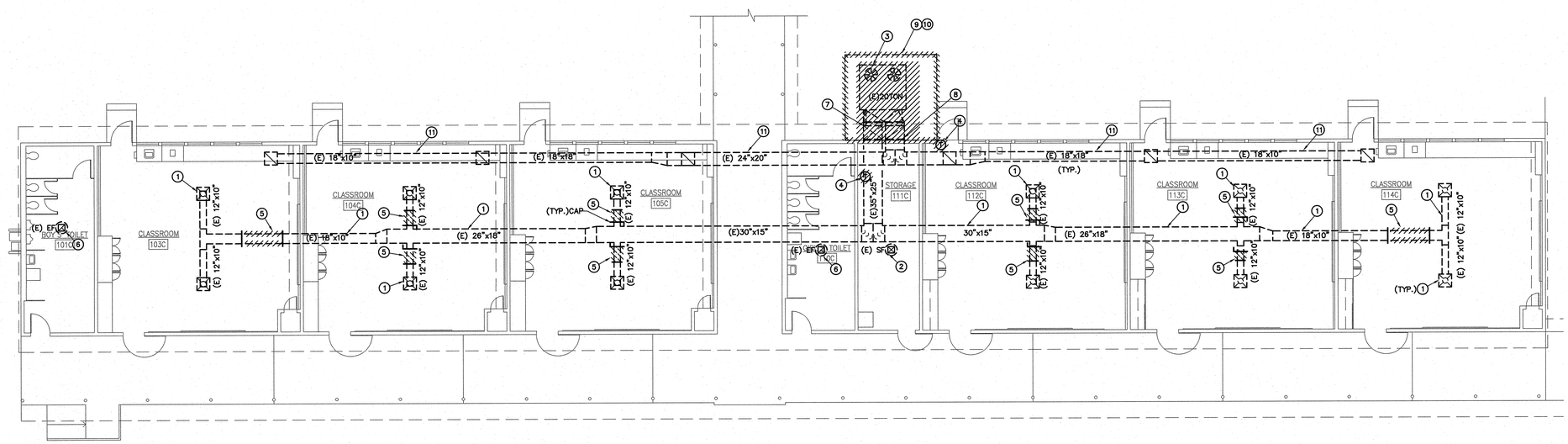

DEMOLITION KEY NOTES:

1. EXISTING MAIN SUPPLY DUCTWORK AND SUPPLY AIR DIFFUSERS TO REMAIN.
2. EXISTING SUPPLY FAN AND DUCTWORK TO REMAIN.
3. EXISTING AC UNIT. AC UNIT CURB AND RELATED ACCESSORIES TO BE REMOVED AND REPLACED WITH NEW AC UNIT.
4. EXISTING T-STAT TO BE REMOVED.
5. PARTIAL EXISTING SUPPLY AIR DUCT AND EXISTING MANUAL VOLUME DAMPER TO BE REMOVED. CAP UNUSED DUCT OPENING.
6. EXISTING EXHAUST FAN AND DUCTWORK TO REMAIN.
7. EXISTING 30"X25" MAIN SUPPLY AIR DUCT TO BE REMOVED AND REPLACED.
8. EXISTING 35"X25" RETURN DUCT TO BE REMOVED AND REPLACED.
9. EXISTING CONCRETE PAD TO BE REMOVED AND REPLACED WITH A NEW PAD.
10. EXISTING FENCE TO BE REMOVED AND REPLACED WITH A NEW FENCE AT A NEW LOCATION.
11. EXISTING MAIN RETURN DUCT AND AIR GRILLES TO REMAIN.

GENERAL DEMOLITION NOTES

1. OWNER SHALL HAVE FIRST RIGHT OF REFUSAL ON ALL ITEMS TO BE REMOVED. CONTRACTOR SHALL VERIFY ALL SUCH ITEMS WITH OWNER PRIOR TO REMOVAL. ALL ITEMS NOT REFUSED BY OWNER SHALL BE REMOVED INTACT AND FULLY FUNCTIONAL BY REFUSED BY OWNER SHALL BE PROPERLY DISPOSED OF BY CONTRACTOR.
2. CONTRACTOR SHALL RE-USE EXISTING OPENINGS IN WALLS AND ROOF WHEREVER POSSIBLE. COORDINATE WITH OTHER TRADES AS NECESSARY. GENERAL CONTRACTOR SHALL MODIFY OPENING AS REQUIRED TO ACCOMODATE NEW MECHANICAL DEVICE.
3. GENERAL CONTRACTOR SHALL PATCH ALL OPENINGS IN WALLS, ROOF, ETC. THAT WILL NOT BE REUSED FOR FUTURE WORK. COORDINATE AS NECESSARY WITH OTHER TRADES.
4. CONTRACTOR SHALL COORDINATE WITH OWNER PRIOR TO ANY WORK BEING DONE STORAGE OF MECHANICAL EQUIPMENT TO BE RE-USED DURING CONSTRUCTION.
5. PRIOR TO ANY WORK BEING DONE CONTRACTOR SHALL MAKE A CAREFUL EVALUATION OF THE EXISTING CONDITIONS AND VERIFY ALL METHODS OF REMOVAL AND INSTALLATION OF MECHANICAL EQUIPMENT.
6. CONTRACTOR SHALL COORDINATE ALL DEMOLITION WORK WITH THE WORK OF ALL OTHER TRADES.
7. CONTRACTOR SHALL CLEAN ALL AIR DEVICES AND DUCTWORK TO REMAIN PER SPECIFICATIONS.
8. CONTRACTOR SHALL CLEAN ALL EXISTING DUCTWORK INCLUDING LINED DUCTWORK TO REMAIN PER SPECIFICATIONS. PRIOR TO BID AND BEFORE COMMENCEMENT OF ANY WORK ALL EXISTING DUCTWORK TO REMAIN SHALL BE CONFIRMED ON SITE.

NORTH

BUILDING C - DEMOLITION FLOOR PLAN | 1/8" = 1'-0" | 2

WLC ARCHITECTS
CLIENT FOCUSED • PASSION DRIVEN

SOUTHERN CALIFORNIA
8163 ROCHESTER AVENUE, SUITE 100
RANCHO CUCAMONGA
CALIFORNIA 91730-0729

TEL: 909-987-0909
www.wlcarchitects.com

LONGFELLOW ELEMENTARY SCHOOL HVAC REPLACEMENT

COMPTON UNIFIED SCHOOL DISTRICT
1101 S DWIGHT AVE.
COMPTON, CA 90220

MARK GRAHAM C-26046 03-31-19 — LICENSED ARCHITECT — STATE OF CALIFORNIA

ABBY BANDERAS No. M29253 Exp. 6/30/19 — REGISTERED PROFESSIONAL ENGINEER — MECHANICAL — STATE OF CALIFORNIA

CONSULTANT

IDENTIFICATION STAMP
DIV. OF THE STATE ARCHITECT
OFFICE OF REGULATION SERVICES
APPL 03-118423
AC — FLS — SS — EY
DATE MAR 0 6 2018
FILE: 19-23

NO	DATE	BY	DESCRIPTION
			REVISIONS

DRAWN: KC	CHECKED:
DATE: 3/6/2018	SCALE:
PROJECT NUMBER: 570064	

BUILDING C DEMO AND REMODEL FLOOR PLANS

DRAWING NUMBER: M-2.1

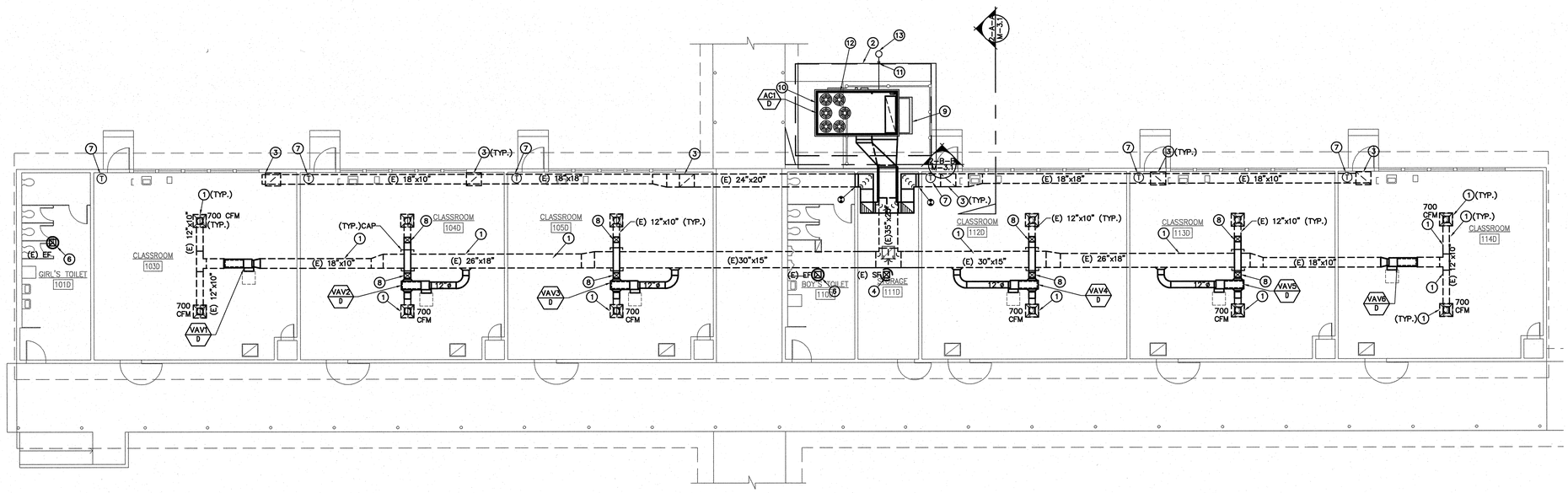

CONSTRUCTION KEY NOTES:

1. EXISTING MAIN SUPPLY DUCTWORK AND SUPPLY AIR DIFFUSERS TO REMAIN.SEE SHEET #2,#3, AND #4/M-4.1 FOR CEILING DIFFUSER AND DUCT SUPPORT DETAIL.
2. NEW FENCE AND CONCRETE PAD.
3. EXISTING MAIN RETURN DUCT AND GRILLES TO REMAIN.SEE SHEET #2,#3, AND #4/M-4.1 FOR CEILING DIFFUSER AND DUCT SUPPORT DETAIL.
4. EXISTING SUPPLY FAN AND DUCTWORK TO REMAIN.
5. CONTRACTOR TO USE M.W. SAUSSE & CO.,INC CURB AND CALCS. SEE SHEET M-4.4.
6. EXISTING EXHAUST FAN AND DUCTWORK TO REMAIN.
7. ELECTRONIC EMS THERMOSTAT MOUNT AT 48" A.F.F. SEE DETAIL SHEET #7/M-4.1 FOR A/C CONTROL.
8. CONTRACTOR TO OFFSET NEW (W) 12"X10" DUCT ABOVE MAIN SUPPLY DUCT.
9. POWER EXHAUST MOUNTED ON THE AC UNIT.
10. NEW AC UNIT AND CURB WILL BE ON CONCRETE PAD. SEE DETAIL SHEET # 9/M-4.1 FOR PAD.
11. ¾" CONDENSATE DRAIN TO DRYWELL. PROVIDE NEW VENTED P-TRAP IF NECESSARY.
12. CONTRACTOR TO PROVIDE EXTENSION ON GAS PIPING AS REQUIRED TO RECONNECT EXISTING GAS PIPING TO NEW AC UNIT.
12. NEW DRY WELL. SEE DETAIL SHEET #5/M-4.1.

CONSTRUCTION NOTES:

1. CONTRACTOR SHALL COORDINATE WORK WITH OTHER TRADES AS NECESSARY PRIOR TO INSTALLATION.
2. CONTRACTOR SHALL MAINTAIN PROPER CLEARANCES FROM ALL ELECTRICAL EQUIPMENT AND SERVICE CLEARANCES FOR MECHANICAL EQUIPMENT.
3. FRESH AIR INTAKES SHALL BE 10'-0" MIN. AWAY FROM ALL EXHAUST OUTLETS, PLUMBING VENTS, AND FLUES.
4. CONTRACTOR SHALL COORDINATE EXACT EQUIPMENT PAD SIZES AND LOCATIONS WITH OTHER TRADES PRIOR TO INSTALLATION.
5. MAINTAIN MANUFACTURER MIN. CLEARANCES ON ALL AC UNITS.
6. BEFORE BIDDING ON THIS WORK, THE CONTRACTOR SHALL MAKE A CAREFUL EXAMINATION OF THE PREMISES, EXISTING EQUIPMENT AND SERVICES. HE SHALL DEFINITELY DETERMINE IN ADVANCE, THE METHODS OF INSTALLING AND CONNECTING THE NEW EQUIPMENT, DUCTWORK, AND PIPING THE MEANS TO BE PROVIDED FOR GETTING THE EQUIPMENT AND MATERIALS INTO PLACE AND SHALL MAKE HIMSELF THOROUGHLY FAMILIAR WITH ALL OF THE REQUIREMENTS OF THE PROJECT. FAILURE TO VISIT THE SITE WILL IN NO WAY RELIEVE THE SUCCESSFUL CONTRACTOR OF THE NECESSITY OF FURNISHING ANY MATERIAL OR PERFORMING ANY WORK THAT MAY BE REQUIRED TO COMPLETE THE WORK IN ACCORDANCE WITH THE DRAWINGS AND SPECIFICATIONS. THIS ADDITIONAL WORK SHALL BE PERFORMED WITHOUT ADDITIONAL COST TO THE OWNER.
7. BEFORE COMMENCEMENT OF WORK, THE CONTRACTOR SHALL VERIFY THE EXACT LOCATIONS AND DIMENSIONS OF ALL EXISTING EQUIPMENT AND ELECTRICAL SERVICES IN THE AREA OF CONSTRUCTION AND NOTIFY THE ENGINEER OF ANY DISCREPANCIES.
8. ALL NEW EXPOSED SHEET METAL DUCTWORK, SHEET METAL CURB / PLATFORM AND DUCT SUPPORT SHALL BE PREPARED AND PAINTED PER DISTRICT STANDARDS.

NORTH

BUILDING D - REMODEL FLOOR PLAN | 1/8" = 1'-0" | 1

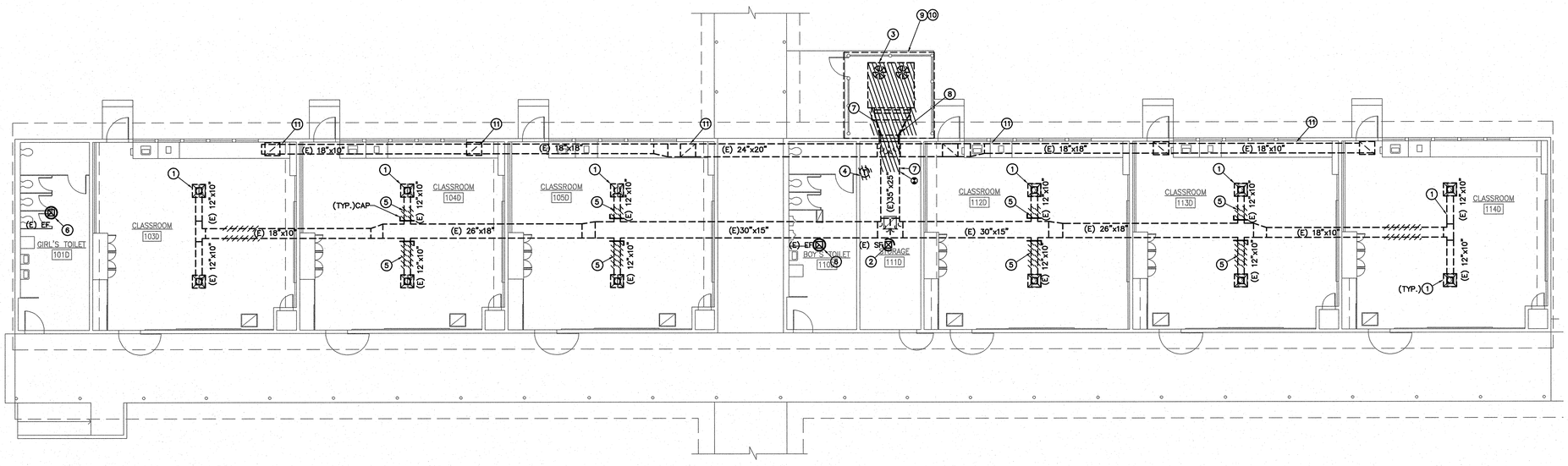

DEMOLITION KEY NOTES:

1. EXISTING MAIN SUPPLY DUCTWORK AND SUPPLY AIR DIFFUSERS TO REMAIN.
2. EXISTING SUPPLY FAN AND DUCTWORK TO REMAIN.
3. EXISTING AC UNIT, AC UNIT CURB AND RELATED ACCESSORIES TO BE REMOVED AND REPLACED WITH NEW AC UNIT.
4. EXISTING T-STAT TO BE REMOVED.
5. PARTIAL EXISTING SUPPLY AIR DUCT AND EXISTING MANUAL VOLUME DAMPER TO BE REMOVED. CAP UNUSED DUCT OPENING.
6. EXISTING EXHAUST FAN AND DUCTWORK TO REMAIN.
7. EXISTING 30"X25" MAIN SUPPLY AIR DUCT TO BE REMOVED AND REPLACED.
8. EXISTING 35"X25" RETURN DUCT TO BE REMOVED AND REPLACED.
9. EXISTING CONCRETE PAD TO BE REMOVED AND REPLACED WITH A NEW PAD.
10. EXISTING FENCE TO BE REMOVED AND REPLACED WITH A NEW FENCE AT A NEW LOCATION.
11. EXISTING MAIN RETURN DUCT AND AIR GRILLES TO REMAIN.

GENERAL DEMOLITION NOTES

1. OWNER SHALL HAVE FIRST RIGHT OF REFUSAL ON ALL ITEMS TO BE REMOVED.CONTRACTOR SHALL VERIFY ALL SUCH ITEMS WITH OWNER PRIOR TO REMOVAL. ALL ITEMS NOT REFUSED BY OWNER SHALL BE REMOVED INTACT AND FULLY FUNCTIONAL BY REFUSED BY OWNER SHALL BE PROPERLY DISPOSED OF BY CONTRACTOR.
2. CONTRACTOR SHALL RE-USE EXISTING OPENINGS IN WALLS AND ROOF WHEREVER POSSIBLE. COORDINATE WITH OTHER TRADES AS NECESSARY. GENERAL CONTRACTOR SHALL MODIFY OPENING AS REQUIRED TO ACCOMMODATE NEW MECHANICAL DEVICE.
3. GENERAL CONTRACTOR SHALL PATCH ALL OPENINGS IN WALLS, ROOF, ETC. THAT WILL NOT BE REUSED FOR FUTURE WORK. COORDINATE AS NECESSARY WITH OTHER TRADES.
4. CONTRACTOR SHALL COORDINATE WITH OWNER PRIOR TO ANY WORK BEING DONE STORAGE OF MECHANICAL EQUIPMENT TO BE RE-USED DURING CONSTRUCTION.
5. PRIOR TO ANY WORK BEING DONE CONTRACTOR SHALL MAKE A CAREFUL EVALUATION OF THE EXISTING CONDITIONS AND VERIFY ALL METHODS OF REMOVAL AND INSTALLATION OF MECHANICAL EQUIPMENT.
6. CONTRACTOR SHALL COORDINATE ALL DEMOLITION WORK WITH THE WORK OF ALL OTHER TRADES.
7. CONTRACTOR SHALL CLEAN ALL AIR DEVICES AND DUCTWORK TO REMAIN PER SPECIFICATIONS.
8. CONTRACTOR SHALL CLEAN ALL EXISTING DUCTWORK INCLUDING LINED DUCTWORK TO REMAIN PER SPECIFICATIONS. PRIOR TO BID AND BEFORE COMMENCEMENT OF ANY WORK ALL EXISTING DUCTWORK TO REMAIN SHALL BE CONFIRMED ON SITE.

NORTH

BUILDING D - DEMOLITION FLOOR PLAN | 1/8" = 1'-0" | 2

WLC ARCHITECTS
CLIENT FOCUSED • PASSION DRIVEN

SOUTHERN CALIFORNIA
8163 ROCHESTER AVENUE, SUITE 100
RANCHO CUCAMONGA
CALIFORNIA 91730-0729
TEL: 909-987-0909
www.wlcarchitects.com

LONGFELLOW ELEMENTARY SCHOOL HVAC REPLACEMENT

COMPTON UNIFIED SCHOOL DISTRICT
1101 S DWIGHT AVE.
COMPTON, CA 90220

LICENSED ARCHITECT — MARK GRAHAM — C-26046 — 03-31-19 — STATE OF CALIFORNIA

REGISTERED PROFESSIONAL ENGINEER — BRIAN BAMERAS — No. M29253 — Exp. 6/30/19 — MECHANICAL — STATE OF CALIFORNIA

CONSULTANT

FILE: 19-23

IDENTIFICATION STAMP
DIV. OF THE STATE ARCHITECT
OFFICE OF REGULATION SERVICES
APPL 03-118423
AC ___ FLS ___ SS IEY
DATE MAR 0 8 2018

NO	DATE	BY	DESCRIPTION
1			REVISIONS

DRAWN: KC	CHECKED:
DATE: 3/6/2018	SCALE:
PROJECT NUMBER: 570064	

BUILDING D DEMO AND REMODEL FLOOR PLANS

DRAWING NUMBER: M-2.2

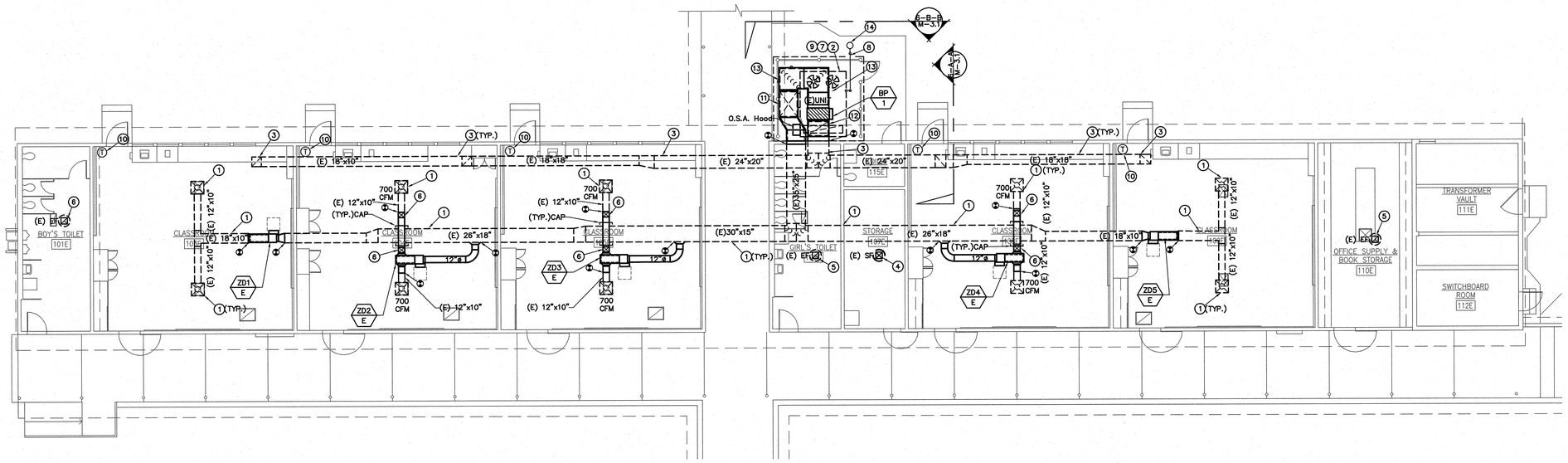

BUILDING E - REMODEL FLOOR PLAN | 1/8" = 1'-0" | 1

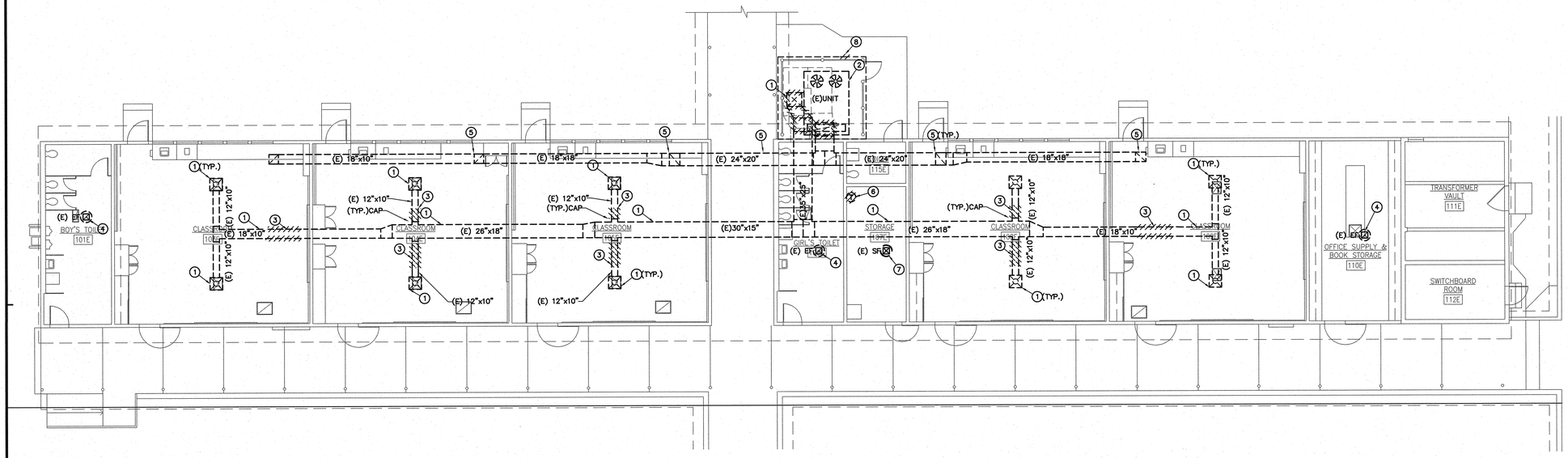

BUILDING E - DEMOLITION FLOOR PLAN | 1/8" = 1'-0" | 2

CONSTRUCTION KEY NOTES:

1. EXISTING MAIN SUPPLY DUCTWORK AND SUPPLY AIR DIFFUSERS TO REMAIN.SEE SHEET #2,#3, AND #4/M-4.1 FOR CEILING DIFFUSER AND DUCT SUPPORT DETAIL.
2. EXISTING UNIT TO REMIAN
3. EXISTING MAIN RETURN DUCT AND GRILLES TO REMAIN.SEE SHEET #2,#3, AND #4/M-4.1 FOR CEILING DIFFUSER AND DUCT SUPPORT DETAIL.
4. EXISTING SUPPLY FAN AND DUCTWORK TO REMAIN.
5. EXISTING EXHAUST FAN AND DUCTWORK TO REMAIN.
6. CONTRACTOR TO OFFSET NEW (W) 12"x10" DUCT ABOVE MAIN SUPPLY DUCT.
7. CONTRACTOR TO PROVIDE EXTENSION ON GAS PIPING TO EXISTING .
8. CONTRACTOR TO PROVIDE AN EXTENSION ON CONDENSATE PIPING TO DRYWELL. PROVIDE NEW VENTED P-TRAP WHERE NECESSARY.
9. CONTRACTOR TO PROVIDE O.S.A. AND RETURN DAMPER IF EXISTING UNIT DOES NOT HAVE ONE.
10. ELECTRONIC EMS THERMOSTAT MOUNT AT 48" A.F.F. SEE DETAIL SHEET #7/M-4.1 FOR A/C CONTROL.
11. NEW 36"x28" (L) 40"x32" SUPPLY DUCT. CONTRACTOR TO PROVIDE CONNECTION TO EXISTING SUPPLY DUCT.
12. NEW 36"x28" (L) 40"x30" SUPPLY DUCT.
13. NEW 36"x12" (L) 40"x16" DUCT TO BE DUCTED TO BYPASS DAMPER AND SUPPLY DUCT.
14. NEW DRYWELL. SEE DETAIL SHEET #5/M-4.1.

CONSTRUCTION NOTES:

1. CONTRACTOR SHALL COORDINATE WORK WITH OTHER TRADES AS NECESSARY PRIOR TO INSTALLATION.
2. CONTRACTOR SHALL MAINTAIN PROPER CLEARANCES FROM ALL ELECTRICAL EQUIPMENT AND SERVICE CLEARANCES FOR MECHANICAL EQUIPMENT.
4. FRESH AIR INTAKES SHALL BE 10'-0" MIN. AWAY FROM ALL EXHAUST OUTLETS, PLUMBING VENTS, AND FLUES.
5. CONTRACTOR SHALL COORDINATE EXACT EQUIPMENT PAD SIZES AND LOCATIONS WITH OTHER TRADES PRIOR TO INSTALLATION.
6. MAINTAIN MANUFACTURER MIN. CLEARANCES ON ALL AC UNITS.
7. BEFORE BIDDING ON THIS WORK, THE CONTRACTOR SHALL MAKE A CAREFUL EXAMINATION OF THE PREMISES, EXISTING EQUIPMENT AND SERVICES. HE SHALL DEFINITELY DETERMINE IN ADVANCE, THE METHODS OF INSTALLING AND CONNECTING THE NEW EQUIPMENT, DUCTWORK, AND PIPING THE MEANS TO BE PROVIDED FOR GETTING THE EQUIPMENT AND MATERIALS INTO PLACE AND SHALL MAKE HIMSELF THOROUGHLY FAMILIAR WITH ALL OF THE REQUIREMENTS OF THE PROJECT. FAILURE TO VISIT THE SITE WILL IN NO WAY RELIEVE THE SUCCESSFUL CONTRACTOR OF THE NECESSITY OF FURNISHING ANY MATERIAL OR PERFORMING ANY WORK THAT MAY BE REQUIRED TO COMPLETE THE WORK IN ACCORDANCE WITH THE DRAWINGS AND SPECIFICATIONS. THIS ADDITIONAL WORK SHALL BE PERFORMED WITHOUT ADDITIONAL COST TO THE OWNER.
8. BEFORE COMMENCEMENT OF WORK, THE CONTRACTOR SHALL VERIFY THE EXACT LOCATIONS AND DIMENSIONS OF ALL EXISTING EQUIPMENT AND ELECTRICAL SERVICES IN THE AREA OF CONSTRUCTION AND NOTIFY THE ENGINEER OF ANY DISCREPANCIES.
9. ALL NEW EXPOSED SHEET METAL DUCTWORK, SHEET METAL CURB / PLATFORM AND DUCT SUPPORT SHALL BE PREPARED AND PAINTED PER DISTRICT STANDARDS.

NORTH

DEMOLITION KEY NOTES:

1. EXISTING MAIN SUPPLY DUCTWORK AND SUPPLY AIR DIFFUSERS TO REMAIN.
2. EXISTING AC UNIT, AC UNIT CURB AND RELATED ACCESSORIES TO REMAIN.
3. PARTIAL EXISTING SUPPLY AIR DUCT AND EXISTING MANUAL VOLUME DAMPER TO BE REMOVED. CAP UNUSED DUCT OPENING.
4. EXISTING EXHAUST FAN AND DUCTWORK TO REMAIN.
5. EXISTING MAIN RETURN DUCT AND AIR GRILLES TO REMAIN.
6. EXISTING TSTAT TO BE REMOVED.
7. EXISTING SUPPLY FAN AND DUCTWORK TO REMAIN.
8. PORTION OF EXISTING UNIT PAD TO BE DEMO FOR CONDENSATE ROUTING TO DRYWELL.

GENERAL DEMOLITION NOTES

1. OWNER SHALL HAVE FIRST RIGHT OF REFUSAL ON ALL ITEMS TO BE REMOVED.CONTRACTOR SHALL VERIFY ALL SUCH ITEMS WITH OWNER PRIOR TO REMOVAL. ALL ITEMS NOT REFUSED BY OWNER SHALL BE REMOVED INTACT AND FULLY FUNCTIONAL BY REFUSED BY OWNER SHALL BE PROPERLY DISPOSED OF BY CONTRACTOR.
2. CONTRACTOR SHALL RE-USE EXISTING OPENINGS IN WALLS AND ROOF WHEREVER POSSIBLE. COORDINATE WITH OTHER TRADES AS NECESSARY. GENERAL CONTRACTOR SHALL MODIFY OPENING AS REQUIRED TO ACCOMMODATE NEW MECHANICAL DEVICE.
3. GENERAL CONTRACTOR SHALL PATCH ALL OPENINGS IN WALLS, ROOF, ETC. THAT WILL NOT BE REUSED FOR FUTURE WORK. COORDINATE AS NECESSARY WITH OTHER TRADES.
4. CONTRACTOR SHALL COORDINATE WITH OWNER PRIOR TO ANY WORK BEING DONE STORAGE OF MECHANICAL EQUIPMENT TO BE RE-USED DURING CONSTRUCTION.
5. PRIOR TO ANY WORK BEING DONE CONTRACTOR SHALL MAKE A CAREFUL EVALUATION OF THE EXISTING CONDITIONS AND VERIFY ALL METHODS OF REMOVAL AND INSTALLATION OF MECHANICAL EQUIPMENT.
6. CONTRACTOR SHALL COORDINATE ALL DEMOLITION WORK WITH THE WORK OF ALL OTHER TRADES.
7. CONTRACTOR SHALL CLEAN ALL AIR DEVICES AND DUCTWORK TO REMAIN PER SPECIFICATIONS.
8. CONTRACTOR SHALL CLEAN ALL EXISTING DUCTWORK INCLUDING LINED DUCTWORK TO REMAIN PER SPECIFICATIONS. PRIOR TO BID AND BEFORE COMMENCEMENT OF ANY WORK ALL EXISTING DUCTWORK TO REMAIN SHALL BE CONFIRMED ON SITE.

NORTH

WLC ARCHITECTS
CLIENT FOCUSED • PASSION DRIVEN

SOUTHERN CALIFORNIA
8163 ROCHESTER AVENUE, SUITE 100
RANCHO CUCAMONGA
CALIFORNIA 91730-0729
TEL: 909-987-0909
www.wlcarchitects.com

LONGFELLOW ELEMENTARY SCHOOL HVAC REPLACEMENT

COMPTON UNIFIED SCHOOL DISTRICT
1101 S DWIGHT AVE.
COMPTON, CA 90220

LICENSED ARCHITECT MARK GRAHAM C-26046 03-31-19 STATE OF CALIFORNIA

REGISTERED PROFESSIONAL ENGINEER JEFF BAKER No. M29253 Exp. 6/30/19 MECHANICAL STATE OF CALIFORNIA

CONSULTANT

IDENTIFICATION STAMP DIV. OF THE STATE ARCHITECT OFFICE OF REGULATION SERVICES
APPL 03-118423
AC FLS SS EY
DATE NOV 0 2018
FILE: 19-23

NO	DATE	BY	DESCRIPTION
			REVISIONS

DRAWN: KC	CHECKED:
DATE: 3/6/2018	SCALE:
PROJECT NUMBER: 570064	

BUILDING E DEMO AND REMODEL FLOOR PLANS

DRAWING NUMBER: M-2.3

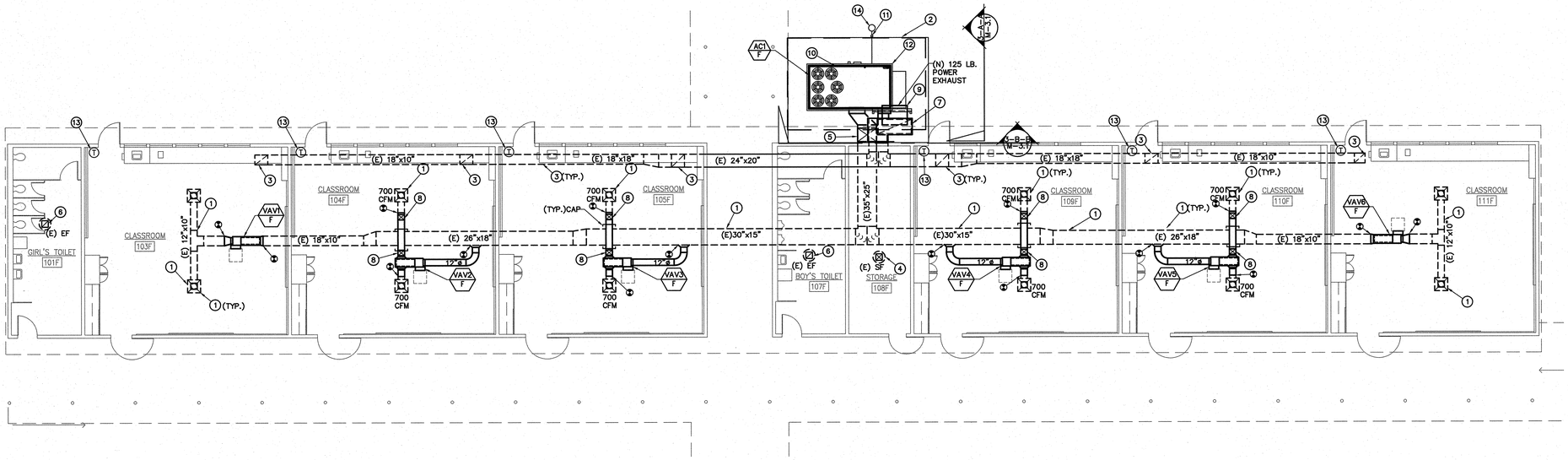

CONSTRUCTION KEY NOTES:

1. EXISTING MAIN SUPPLY DUCTWORK AND SUPPLY AIR DIFFUSERS TO REMAIN.SEE SHEET #2,#3, AND #4/M-4.1 FOR CEILING DIFFUSER AND DUCT SUPPORT DETAIL.
2. NEW FENCE AND CONCRETE PAD.
3. EXISTING MAIN RETURN DUCT AND GRILLES TO REMAIN.SEE SHEET #2,#3, AND #4/M-4.1 FOR CEILING DIFFUSER AND DUCT SUPPORT DETAIL.
4. EXISTING SUPPLY FAN AND DUCTWORK TO REMAIN.
5. NEW 35"X25"(L) SUPPLY AIR DUCT. 40"X28" SHEET METAL SIZES. SEE STRUCTURAL SHEET #1/S2.1.
6. EXISTING EXHAUST FAN AND DUCTWORK TO REMAIN.
7. NEW 60"X26"(L) RETURN AIR DUCT. 64"X30" SHEET METAL SIZES. SEE STRUCTURAL SHEET #1/S2.1.
8. CONTRACTOR TO OFFSET NEW (W) 12"X10" DUCT ABOVE MAIN SUPPLY DUCT.
9. POWER EXHAUST MOUNTED ON THE NEW RETURN DUCT. SEE STRUCTURAL SHEET #1/S2.1.
10. NEW AC UNIT WILL BE ON CONCRETE PAD. SEE DETAIL SHEET #10/M-4.1 FOR PAD.
11. 3/4" CONDENSATE DRAIN TO DRYWELL. PROVIDE NEW VENTED P-TRAP IF NECESSARY.
12. CONTRACTOR TO PROVIDE EXTENSION ON GAS PIPING AS REQUIRED TO RECONNECT EXISTING GAS PIPING TO NEW AC UNIT.
13. ELECTRONIC EMS THERMOSTAT MOUNT AT 48" A.F.F. SEE DETAIL SHEET #7/M-4.1 FOR A/C CONTROL.
14. NEW DRY WELL. SEE DETAIL SHEET #5/M-4.1.

CONSTRUCTION NOTES:

1. CONTRACTOR SHALL COORDINATE WORK WITH OTHER TRADES AS NECESSARY PRIOR TO INSTALLATION.
2. CONTRACTOR SHALL MAINTAIN PROPER CLEARANCES FROM ALL ELECTRICAL EQUIPMENT AND SERVICE CLEARANCES FOR MECHANICAL EQUIPMENT.
4. FRESH AIR INTAKES SHALL BE 10'-0" MIN. AWAY FROM ALL EXHAUST OUTLETS, PLUMBING VENTS, AND FLUES.
5. CONTRACTOR SHALL COORDINATE EXACT EQUIPMENT PAD SIZES AND LOCATIONS WITH OTHER TRADES PRIOR TO INSTALLATION.
6. MAINTAIN MANUFACTURER MIN. CLEARANCES ON ALL AC UNITS.
7. BEFORE BIDDING ON THIS WORK, THE CONTRACTOR SHALL MAKE A CAREFUL EXAMINATION OF THE PREMISES, EXISTING EQUIPMENT AND SERVICES. HE SHALL DEFINITELY DETERMINE IN ADVANCE, THE METHODS OF INSTALLING AND CONNECTING THE NEW EQUIPMENT, DUCTWORK, AND PIPING THE MEANS TO BE PROVIDED FOR GETTING THE EQUIPMENT AND MATERIALS INTO PLACE AND SHALL MAKE HIMSELF THOROUGHLY FAMILIAR WITH ALL OF THE REQUIREMENTS OF THE PROJECT. FAILURE TO VISIT THE SITE WILL IN NO WAY RELIEVE THE SUCCESSFUL CONTRACTOR OF THE NECESSITY OF FURNISHING ANY MATERIAL OR PERFORMING ANY WORK THAT MAY BE REQUIRED TO COMPLETE THE WORK IN ACCORDANCE WITH THE DRAWINGS AND SPECIFICATIONS. THIS ADDITIONAL WORK SHALL BE PERFORMED WITHOUT ADDITIONAL COST TO THE OWNER.
8. BEFORE COMMENCEMENT OF WORK, THE CONTRACTOR SHALL VERIFY THE EXACT LOCATIONS AND DIMENSIONS OF ALL EXISTING EQUIPMENT AND ELECTRICAL SERVICES IN THE AREA OF CONSTRUCTION AND NOTIFY THE ENGINEER OF ANY DISCREPANCIES.
9. ALL NEW EXPOSED SHEET METAL DUCTWORK, SHEET METAL CURB / PLATFORM AND DUCT SUPPORT SHALL BE PREPARED AND PAINTED PER DISTRICT STANDARDS.

NORTH

BUILDING F - REMODEL FLOOR PLAN | 1/8" = 1'-0" | 1

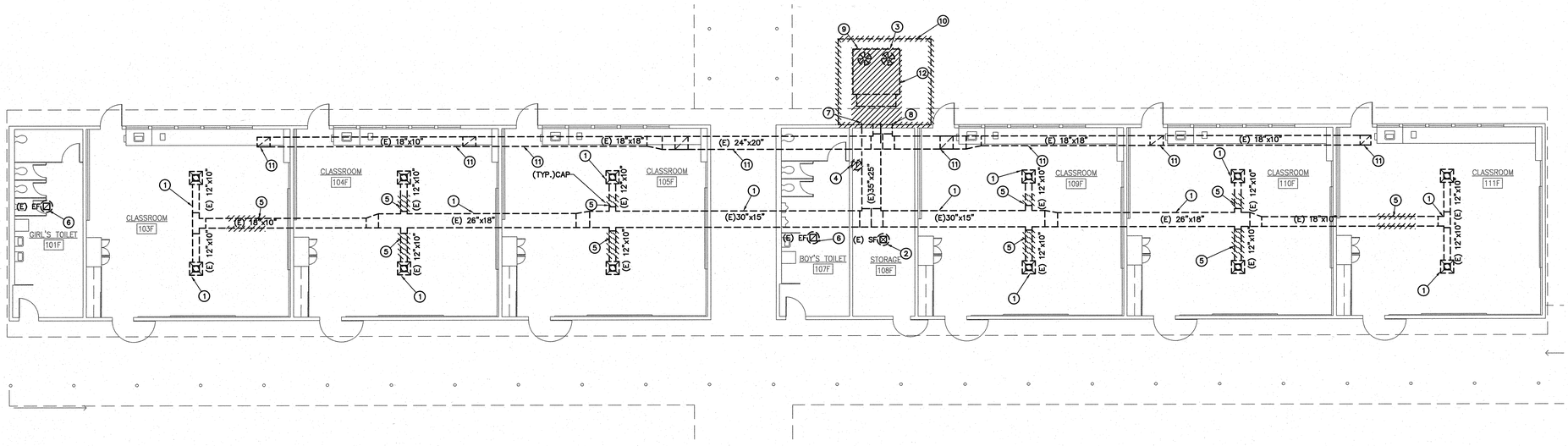

DEMOLITION KEY NOTES:

1. EXISTING MAIN SUPPLY DUCTWORK AND SUPPLY AIR DIFFUSERS TO REMAIN.
2. EXISTING SUPPLY FAN AND DUCTWORK TO REMAIN.
3. EXISTING AC UNIT, AC UNIT CURB AND RELATED ACCESSORIES TO BE REMOVED AND REPLACED WITH NEW AC UNIT.
4. EXISTING T-STAT TO BE REMOVED.
5. PARTIAL EXISTING SUPPLY AIR DUCT AND EXISTING MANUAL VOLUME DAMPER TO BE REMOVED. CAP UNUSED DUCT OPENING.
6. EXISTING EXHAUST FAN AND DUCTWORK TO REMAIN.
7. EXISTING 30"X25" MAIN SUPPLY AIR DUCT TO BE REMOVED AND REPLACED.
8. EXISTING 35"X25" RETURN DUCT TO BE REMOVED AND REPLACED.
9. EXISTING CONCRETE PAD TO BE REMOVED AND REPLACED WITH A NEW PAD.
10. EXISTING FENCE TO BE REMOVED AND REPLACED WITH A NEW FENCE AT A NEW LOCATION.
11. EXISTING MAIN RETURN DUCT AND AIR GRILLES TO REMAIN.
12. EXISTING AC UNIT CURB AND RELATED ACCESSORIES TO BE REMOVED AND REPLACED WITH NEW.

GENERAL DEMOLITION NOTES

1. OWNER SHALL HAVE FIRST RIGHT OF REFUSAL ON ALL ITEMS TO BE REMOVED.CONTRACTOR SHALL VERIFY ALL SUCH ITEMS WITH OWNER PRIOR TO REMOVAL. ALL ITEMS NOT REFUSED BY OWNER SHALL BE REMOVED INTACT AND FULLY FUNCTIONAL BY REFUSED BY OWNER SHALL BE PROPERLY DISPOSED OF BY CONTRACTOR.
2. CONTRACTOR SHALL RE-USE EXISTING OPENINGS IN WALLS AND ROOF WHEREVER POSSIBLE. COORDINATE WITH OTHER TRADES AS NECESSARY. GENERAL CONTRACTOR SHALL MODIFY OPENING AS REQUIRED TO ACCOMMODATE NEW MECHANICAL DEVICE.
3. GENERAL CONTRACTOR SHALL PATCH ALL OPENINGS IN WALLS, ROOF, ETC. THAT WILL NOT BE REUSED FOR FUTURE WORK. COORDINATE AS NECESSARY WITH OTHER TRADES.
4. CONTRACTOR SHALL COORDINATE WITH OWNER PRIOR TO ANY WORK BEING DONE STORAGE OF MECHANICAL EQUIPMENT TO BE RE-USED DURING CONSTRUCTION.
5. PRIOR TO ANY WORK BEING DONE CONTRACTOR SHALL MAKE A CAREFUL EVALUATION OF THE EXISTING CONDITIONS AND VERIFY ALL METHODS OF REMOVAL AND INSTALLATION OF MECHANICAL EQUIPMENT.
6. CONTRACTOR SHALL COORDINATE ALL DEMOLITION WORK WITH THE WORK OF ALL OTHER TRADES.
7. CONTRACTOR SHALL CLEAN ALL AIR DEVICES AND DUCTWORK TO REMAIN PER SPECIFICATIONS.
8. CONTRACTOR SHALL CLEAN ALL EXISTING DUCTWORK INCLUDING LINED DUCTWORK TO REMAIN PER SPECIFICATIONS. PRIOR TO BID AND BEFORE COMMENCEMENT OF ANY WORK ALL EXISTING DUCTWORK TO REMAIN SHALL BE CONFIRMED ON SITE.

NORTH

BUILDING F - DEMOLITION FLOOR PLAN | 1/8" = 1'-0" | 2

ARCHITECTS
WLC
CLIENT FOCUSED • PASSION DRIVEN

SOUTHERN CALIFORNIA
8163 ROCHESTER AVENUE, SUITE 100
RANCHO CUCAMONGA
CALIFORNIA 91730-0729

TEL: 909-987-0909
www.wlcarchitects.com

LONGFELLOW ELEMENTARY SCHOOL HVAC REPLACEMENT

COMPTON UNIFIED SCHOOL DISTRICT
1101 S DWIGHT AVE.
COMPTON, CA 90220

LICENSED ARCHITECT MARK GRAHAM C-26046 03-31-19 STATE OF CALIFORNIA

REGISTERED PROFESSIONAL ENGINEER BAKERJIAN No. M28253 Exp. 6/30/19 MECHANICAL STATE OF CALIFORNIA

CONSULTANT

IDENTIFICATION STAMP DIV. OF THE STATE ARCHITECT OFFICE OF REGULATION SERVICES
APPL 03-118423
AC — FLS — SS — EY
DATE MAY 0 9 2019
FILE: 19-23

NO	DATE	BY	DESCRIPTION
1			REVISIONS

DRAWN: KC	CHECKED:
DATE: 3/6/2018	SCALE:
PROJECT NUMBER: 570064	

BUILDING F DEMO AND REMODEL FLOOR PLANS

DRAWING NUMBER: M-2.4

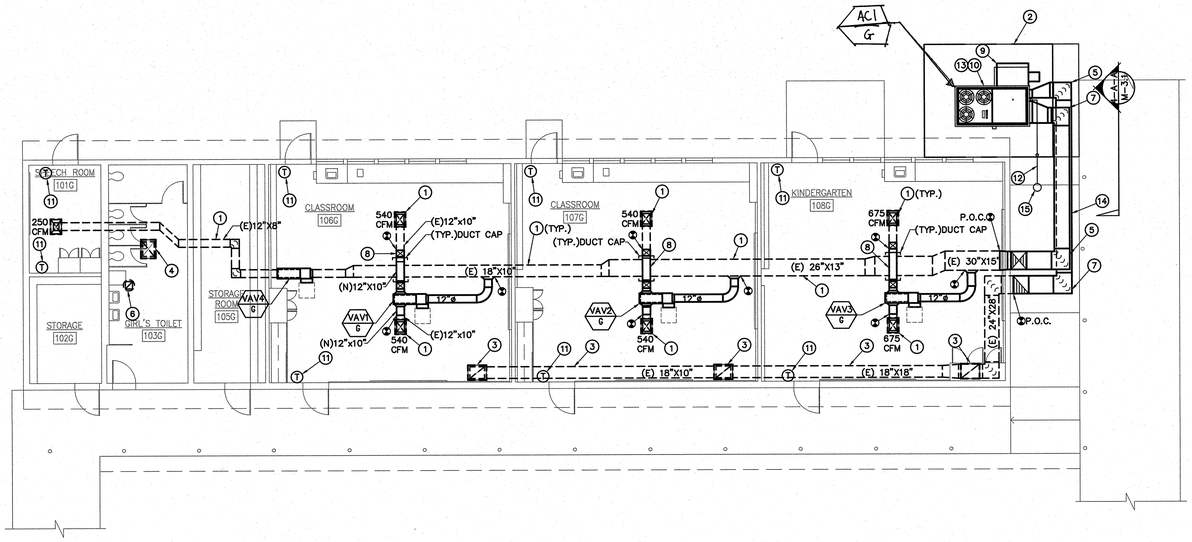

CONSTRUCTION KEY NOTES:

1. EXISTING MAIN SUPPLY DUCTWORK AND SUPPLY AIR DIFFUSERS TO REMAIN.SEE SHEET #2,#3, AND #4/M-4.1 FOR CEILING DIFFUSER AND DUCT SUPPORT DETAIL.
2. NEW FENCE AND CONCRETE PAD. SEE ARCHITECT SHEET FOR MORE DETAILS.
3. EXISTING MAIN RETURN DUCT AND GRILLES TO REMAIN.SEE SHEET #2,#3, AND #4/M-4.1 FOR CEILING DIFFUSER AND DUCT SUPPORT DETAIL.
4. EXISTING MAKE UP AIR HOOD AND DUCTWORK TO REMAIN.
5. NEW 24"X20"(L) SUPPLY AIR DUCT ON TOP. 28"X24" SHEET METAL SIZES. SEE STRUCTURAL SHEET DETAIL #3/S2.1 FOR DUCT SUPPORT.
6. EXISTING EXHAUST FAN AND DUCTWORK TO REMAIN.
7. NEW 24"X20"(L) RETURN AIR DUCT ON BOTTOM. 28"X24" SHEET METAL SIZES. SEE STRUCTURAL SHEET DETAIL #3/S2.1 FOR DUCT SUPPORT.
8. CONTRACTOR TO OFFSET NEW (W) 12"X10" DUCT ABOVE MAIN EXISTING SUPPLY DUCT.
9. POWER EXHAUST MOUNTED ON THE AC UNIT.
10. AC UNIT WILL BE ON 14" FACTORY CURB FOR POWER EXHAUST. SEE SCHEDULE SHEET M-0.2 AC UNIT SCHEDULE REMARK # 6 FOR CURB.
11. ELECTRONIC EMS THERMOSTAT MOUNT AT 48" A.F.F. SEE DETAIL SHEET #7/M-4.1 FOR A/C CONTROL.
12. 3/4" CONDENSATE DRAIN TO DRY WELL. PROVIDE NEW VENTED P-TRAP IF NECESSARY.
13. CONTRACTOR TO PROVIDE EXTENSION ON GAS AND CONDENSATE PIPING TO NEW AC UNITS.
14. SEE STRUCTURAL SHEET DETAIL #3/S2.1 FOR DUCT SUPPORT.
15. NEW DRY WELL. SEE DETAIL SHEET #5/M-4.1.

CONSTRUCTION NOTES:

1. CONTRACTOR SHALL COORDINATE WORK WITH OTHER TRADES AS NECESSARY PRIOR TO INSTALLATION.
2. CONTRACTOR SHALL MAINTAIN PROPER CLEARANCES FROM ALL ELECTRICAL EQUIPMENT AND SERVICE CLEARANCES FOR MECHANICAL EQUIPMENT.
3. FRESH AIR INTAKES SHALL BE 10'-0" MIN. AWAY FROM ALL EXHAUST OUTLETS, PLUMBING VENTS, AND FLUES.
4. CONTRACTOR SHALL COORDINATE EXACT EQUIPMENT PAD SIZES AND LOCATIONS WITH OTHER TRADES PRIOR TO INSTALLATION.
5. MAINTAIN MANUFACTURER MIN. CLEARANCES ON ALL AC UNITS.
6. BEFORE BIDDING ON THIS WORK, THE CONTRACTOR SHALL MAKE A CAREFUL EXAMINATION OF THE PREMISES, EXISTING EQUIPMENT AND SERVICES. HE SHALL DEFINITELY DETERMINE IN ADVANCE, THE METHODS OF INSTALLING AND CONNECTING THE NEW EQUIPMENT, DUCTWORK, AND PIPING THE MEANS TO BE PROVIDED FOR GETTING THE EQUIPMENT AND MATERIALS INTO PLACE AND SHALL MAKE HIMSELF THOROUGHLY FAMILIAR WITH ALL OF THE REQUIREMENTS OF THE PROJECT. FAILURE TO VISIT THE SITE WILL IN NO WAY RELIEVE THE SUCCESSFUL CONTRACTOR OF THE NECESSITY OF FURNISHING ANY MATERIAL OR PERFORMING ANY WORK THAT MAY BE REQUIRED TO COMPLETE THE WORK IN ACCORDANCE WITH THE DRAWINGS AND SPECIFICATIONS. THIS ADDITIONAL WORK SHALL BE PERFORMED WITHOUT ADDITIONAL COST TO THE OWNER.
7. BEFORE COMMENCEMENT OF WORK, THE CONTRACTOR SHALL VERIFY THE EXACT LOCATIONS AND DIMENSIONS OF ALL EXISTING EQUIPMENT AND ELECTRICAL SERVICES IN THE AREA OF CONSTRUCTION AND NOTIFY THE ENGINEER OF ANY DISCREPANCIES.
8. ALL NEW EXPOSED SHEET METAL DUCTWORK, SHEET METAL CURB / PLATFORM AND DUCT SUPPORT SHALL BE PREPARED AND PAINTED PER DISTRICT STANDARDS.

NORTH

BUILDING G - REMODEL FLOOR PLAN | 1/8" = 1'-0" | 1

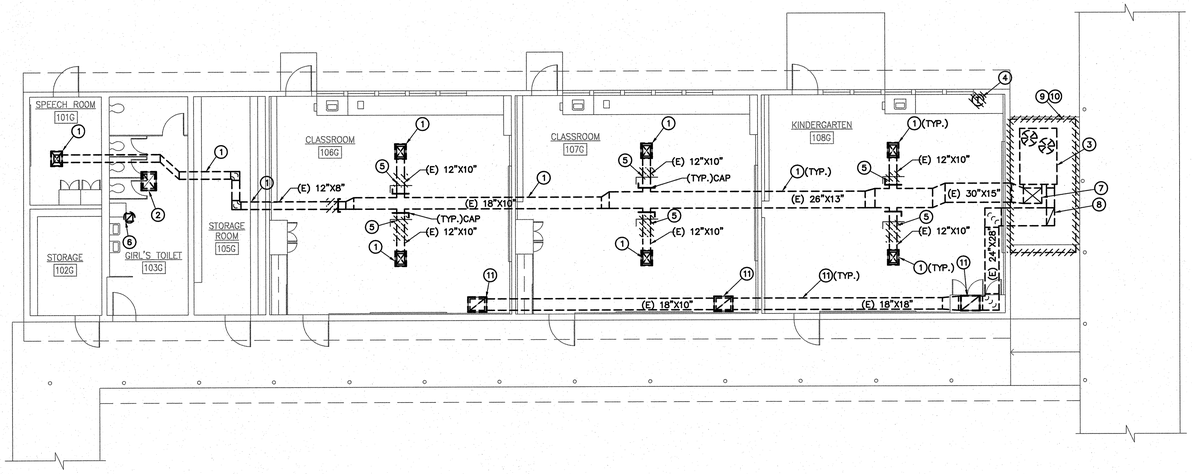

DEMOLITION KEY NOTES:

1. EXISTING MAIN SUPPLY DUCTWORK AND SUPPLY AIR DIFFUSERS TO REMAIN.
2. EXISTING MAKE UP AIR HOOD AND DUCTWORK TO REMAIN.
3. EXISTING AC UNIT, AC UNIT CURB AND RELATED ACCESSORIES TO BE REMOVED AND REPLACED WITH NEW AC UNIT.
4. EXISTING T-STAT TO BE REMOVED.
5. PARTIAL EXISTING SUPPLY AIR DUCT AND EXISTING MANUAL VOLUME DAMPER TO BE REMOVED. CAP UNUSED DUCT OPENING.
6. EXISTING EXHAUST FAN AND DUCTWORK TO REMAIN.
7. EXISTING 30"X15"(L) MAIN SUPPLY AIR DUCT TO BE REMOVED AND REPLACED.
8. EXISTING 24"X28" (L) RETURN DUCT TO BE REMOVED AND REPLACED.
9. EXISTING CONCRETE PAD TO BE REMOVED AND REPLACED WITH A NEW PAD.
10. EXISTING FENCE TO BE REMOVED AND REPLACED WITH A NEW FENCE. SEE ARCHITECT SHEET FOR MORE DETAILS.
11. EXISTING MAIN RETURN DUCT AND AIR GRILLES TO REMAIN.

GENERAL DEMOLITION NOTES

1. OWNER SHALL HAVE FIRST RIGHT OF REFUSAL ON ALL ITEMS TO BE REMOVED.CONTRACTOR SHALL VERIFY ALL SUCH ITEMS WITH OWNER PRIOR TO REMOVAL. ALL ITEMS NOT REFUSED BY OWNER SHALL BE REMOVED INTACT AND FULLY FUNCTIONAL BY REFUSED BY OWNER SHALL BE PROPERLY DISPOSED OF BY CONTRACTOR.
2. CONTRACTOR SHALL RE-USE EXISTING OPENINGS IN WALLS AND ROOF WHEREVER POSSIBLE. COORDINATE WITH OTHER TRADES AS NECESSARY. GENERAL CONTRACTOR SHALL MODIFY OPENING AS REQUIRED TO ACCOMMODATE NEW MECHANICAL DEVICE.
3. GENERAL CONTRACTOR SHALL PATCH ALL OPENINGS IN WALLS, ROOF, ETC. THAT WILL NOT BE REUSED FOR FUTURE WORK. COORDINATE AS NECESSARY WITH OTHER TRADES.
4. PRIOR TO ANY WORK BEING DONE CONTRACTOR SHALL MAKE A CAREFUL EVALUATION OF THE EXISTING CONDITIONS AND VERIFY ALL METHODS OF REMOVAL AND INSTALLATION OF MECHANICAL EQUIPMENT.
5. CONTRACTOR SHALL COORDINATE ALL DEMOLITION WORK WITH THE WORK OF ALL OTHER TRADES.
6. CONTRACTOR SHALL CLEAN ALL AIR DEVICES AND DUCTWORK TO REMAIN PER SPECIFICATIONS.
7. CONTRACTOR SHALL CLEAN ALL EXISTING DUCTWORK INCLUDING LINED DUCTWORK TO REMAIN PER SPECIFICATIONS. PRIOR TO BID AND BEFORE COMMENCEMENT OF ANY WORK ALL EXISTING DUCTWORK TO REMAIN SHALL BE CONFIRMED ON SITE.

NORTH

BUILDING G - DEMOLITION FLOOR PLAN | 1/8" = 1'-0" | 2

WLC ARCHITECTS
CLIENT FOCUSED • PASSION DRIVEN
SOUTHERN CALIFORNIA
8163 ROCHESTER AVENUE, SUITE 100
RANCHO CUCAMONGA
CALIFORNIA 91730-0729
TEL: 909-987-0909
www.wlcarchitects.com

LONGFELLOW ELEMENTARY SCHOOL HVAC REPLACEMENT

COMPTON UNIFIED SCHOOL DISTRICT
1101 S DWIGHT AVE.
COMPTON, CA 90220

LICENSED ARCHITECT MARK GRAHAM C-26546 03-31-19 STATE OF CALIFORNIA
REGISTERED PROFESSIONAL ENGINEER JAMES BARFIELD No. M29253 Exp. 6/30/19 MECHANICAL STATE OF CALIFORNIA

CONSULTANT

IDENTIFICATION STAMP DIV. OF THE STATE ARCHITECT OFFICE OF REGULATION SERVICES
APPL 03-118423
AC FLS SS EY
DATE MAR 05 2018
FILE: 19-23

NO	DATE	BY	DESCRIPTION
1			REVISIONS

DRAWN: KC | CHECKED:
DATE: 3/6/2018 | SCALE:
PROJECT NUMBER: 570064

BUILDING G DEMO AND REMODEL FLOOR PLANS

DRAWING NUMBER: M-2.5

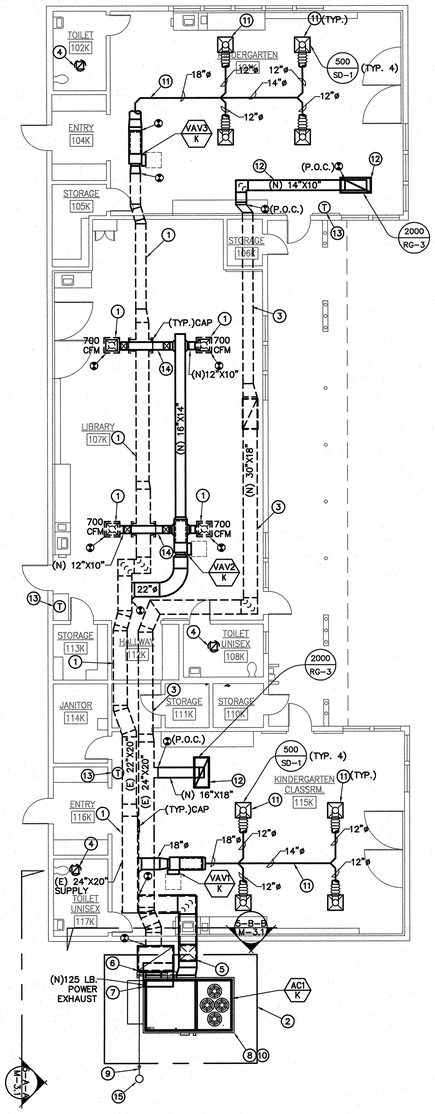

CONSTRUCTION KEY NOTES:

1. EXISTING MAIN SUPPLY DUCTWORK AND SUPPLY AIR DIFFUSERS TO REMAIN. SEE SHEET #2,#3, AND #4/M-4.1 FOR CEILING DIFFUSER AND DUCT SUPPORT DETAIL.
2. NEW FENCE AND CONCRETE PAD.
3. EXISTING MAIN RETURN DUCT AND GRILLES TO REMAIN.SEE SHEET #2,#3, AND #4/M-4.1 FOR CEILING DIFFUSER AND DUCT SUPPORT DETAIL.
4. EXISTING EXHAUST FAN AND DUCTWORK TO REMAIN.
5. NEW 24"X22"(L) SUPPLY AIR DUCT. 28"X26" SHEET METAL SIZES. SEE STRUCTURAL DETAIL SHEET #4/S2.1.
6. NEW 52"X36"(L) RETURN AIR DUCT. 56"X40" SHEET METAL SIZES. SEE STRUCTURAL DETAIL SHEET #4/S2.1.
7. POWER EXHAUST MOUNTED ON THE NEW RETURN DUCT. SEE STRUCTURAL DETAIL SHEET #4/S2.1.
8. NEW AC UNIT WILL BE ON CONCRETE PAD. SEE DETAIL SHEET 10/M-4.1 FOR PAD.
9. ¾" CONDENSATE DRAIN TO CONNECT TO NEW DRY WELL. PROVIDE NEW VENTED P-TRAP IF NECESSARY.
10. CONTRACTOR TO PROVIDE EXTENSION ON GAS AND CONDENSATE PIPING TO EXISTING . PROVIDE NEW VENTED P-TRAP WHERE NECESSARY.
11. NEW SUPPLY AIR DUCT AND DIFFUSER TO REPLACE EXISTING.SEE SHEET #2,#3, AND #4/M-4.1 FOR CEILING DIFFUSER AND DUCT SUPPORT DETAIL.
12. NEW RETURN DUCT AND GRILLE TO REPLACE EXISTING. SEE MECHANICAL DETAIL SHEET #4/M-4.1.
13. ELECTRONIC EMS THERMOSTAT MOUNT AT 48" A.F.F. SEE DETAIL SHEET #7/M-4.1 FOR A/C CONTROL.
14. CONTRACTOR TO OFFSET NEW (W) 12"X10" DUCT ABOVE MAIN SUPPLY DUCT. SEE MECHANICAL DETAIL SHEET.
15. NEW DRY WELL. SEE DETAIL SHEET #5/M-4.1.

CONSTRUCTION NOTES:

1. CONTRACTOR SHALL COORDINATE WORK WITH OTHER TRADES AS NECESSARY PRIOR TO INSTALLATION.
2. CONTRACTOR SHALL MAINTAIN PROPER CLEARANCES FROM ALL ELECTRICAL EQUIPMENT AND SERVICE CLEARANCES FOR MECHANICAL EQUIPMENT.
4. FRESH AIR INTAKES SHALL BE 10'-0" MIN. AWAY FROM ALL EXHAUST OUTLETS, PLUMBING VENTS, AND FLUES.
5. CONTRACTOR SHALL COORDINATE EXACT EQUIPMENT PAD SIZES AND LOCATIONS WITH OTHER TRADES PRIOR TO INSTALLATION.
6. MAINTAIN MANUFACTURER MIN. CLEARANCES ON ALL AC UNITS.
7. BEFORE BIDDING ON THIS WORK, THE CONTRACTOR SHALL MAKE A CAREFUL EXAMINATION OF THE PREMISES, EXISTING EQUIPMENT AND SERVICES. HE SHALL DEFINITELY DETERMINE IN ADVANCE, THE METHODS OF INSTALLING AND CONNECTING THE NEW EQUIPMENT, DUCTWORK, AND PIPING THE MEANS TO BE PROVIDED FOR GETTING THE EQUIPMENT AND MATERIALS INTO PLACE AND SHALL MAKE HIMSELF THOROUGHLY FAMILIAR WITH ALL OF THE REQUIREMENTS OF THE PROJECT. FAILURE TO VISIT THE SITE WILL IN NO WAY RELIEVE THE SUCCESSFUL CONTRACTOR OF THE NECESSITY OF FURNISHING ANY MATERIAL OR PERFORMING ANY WORK THAT MAY BE REQUIRED TO COMPLETE THE WORK IN ACCORDANCE WITH THE DRAWINGS AND SPECIFICATIONS. THIS ADDITIONAL WORK SHALL BE PERFORMED WITHOUT ADDITIONAL COST TO THE OWNER.
8. BEFORE COMMENCEMENT OF WORK, THE CONTRACTOR SHALL VERIFY THE EXACT LOCATIONS AND DIMENSIONS OF ALL EXISTING EQUIPMENT AND ELECTRICAL SERVICES IN THE AREA OF CONSTRUCTION AND NOTIFY THE ENGINEER OF ANY DISCREPANCIES.
9. ALL NEW EXPOSED SHEET METAL DUCTWORK, SHEET METAL CURB / PLATFORM AND DUCT SUPPORT SHALL BE PREPARED AND PAINTED PER DISTRICT STANDARDS.

NORTH

BUILDING K - REMODEL FLOOR PLAN | 1/8" = 1'-0" | 1

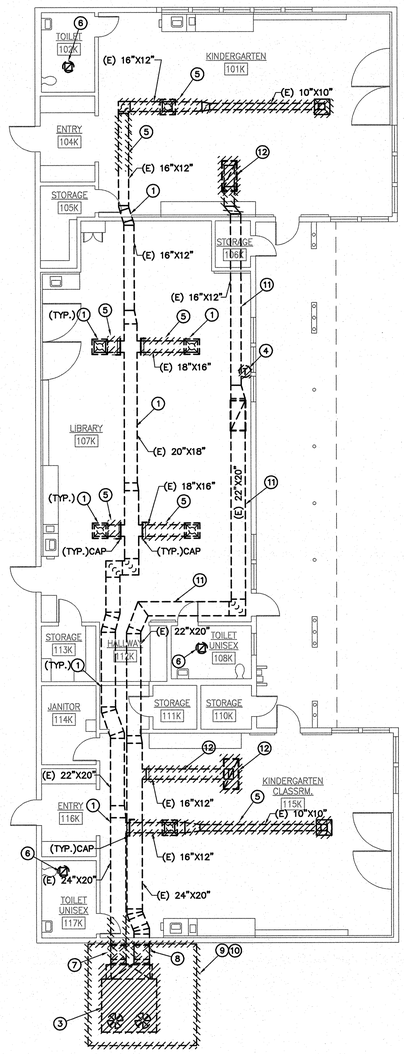

DEMOLITION KEY NOTES:

1. EXISTING MAIN SUPPLY DUCTWORK AND SUPPLY AIR DIFFUSERS TO REMAIN.
2.
3. EXISTING AC UNIT, AC UNIT CURB AND RELATED ACCESSORIES TO BE REMOVED AND REPLACED WITH NEW AC UNIT.
4. EXISTING T-STAT TO BE REMOVED.
5. PARTIAL EXISTING SUPPLY AIR DUCT AND EXISTING MANUAL VOLUME DAMPER TO BE REMOVED. CAP UNUSED DUCT OPENING.
6. EXISTING EXHAUST FAN AND DUCTWORK TO REMAIN.
7. EXISTING 24"X20" MAIN SUPPLY AIR DUCT TO BE REMOVED AND REPLACED.
8. EXISTING 24"X20" RETURN DUCT TO BE REMOVED AND REPLACED.
9. EXISTING CONCRETE PAD TO BE REMOVED AND REPLACED WITH A NEW PAD.
10. EXISTING FENCE TO BE REMOVED AND REPLACED WITH A NEW FENCE AT A NEW LOCATION.
11. EXISTING MAIN RETURN DUCT AND AIR GRILLES TO REMAIN.
12. EXISTING RETURN DUCT AND AIR GRILLES TO BE REMOVED.

GENERAL DEMOLITION NOTES

1. OWNER SHALL HAVE FIRST RIGHT OF REFUSAL ON ALL ITEMS TO BE REMOVED.CONTRACTOR SHALL VERIFY ALL SUCH ITEMS WITH OWNER PRIOR TO REMOVAL. ALL ITEMS NOT REFUSED BY OWNER SHALL BE REMOVED INTACT AND FULLY FUNCTIONAL BY REFUSED BY OWNER SHALL BE PROPERLY DISPOSED OF BY CONTRACTOR.
2. CONTRACTOR SHALL RE-USE EXISTING OPENINGS IN WALLS AND ROOF WHEREVER POSSIBLE. COORDINATE WITH OTHER TRADES AS NECESSARY. GENERAL CONTRACTOR SHALL MODIFY OPENING AS REQUIRED TO ACCOMMODATE NEW MECHANICAL DEVICE.
3. GENERAL CONTRACTOR SHALL PATCH ALL OPENINGS IN WALLS, ROOF, ETC. THAT WILL NOT BE REUSED FOR FUTURE WORK. COORDINATE AS NECESSARY WITH OTHER TRADES.
4. CONTRACTOR SHALL COORDINATE WITH OWNER PRIOR TO ANY WORK BEING DONE STORAGE OF MECHANICAL EQUIPMENT TO BE RE-USED DURING CONSTRUCTION.
5. PRIOR TO ANY WORK BEING DONE CONTRACTOR SHALL MAKE A CAREFUL EVALUATION OF THE EXISTING CONDITIONS AND VERIFY ALL METHODS OF REMOVAL AND INSTALLATION OF MECHANICAL EQUIPMENT.
6. CONTRACTOR SHALL COORDINATE ALL DEMOLITION WORK WITH THE WORK OF ALL OTHER TRADES.
7. CONTRACTOR SHALL CLEAN ALL AIR DEVICES AND DUCTWORK TO REMAIN PER SPECIFICATIONS.
8. CONTRACTOR SHALL CLEAN ALL EXISTING DUCTWORK INCLUDING LINED DUCTWORK TO REMAIN PER SPECIFICATIONS. PRIOR TO BID AND BEFORE COMMENCEMENT OF ANY WORK ALL EXISTING DUCTWORK TO REMAIN SHALL BE CONFIRMED ON SITE.

NORTH

BUILDING K - DEMOLITION FLOOR PLAN | 1/8" = 1'-0" | 2

ARCHITECTS
WLC
CLIENT FOCUSED • PASSION DRIVEN

SOUTHERN CALIFORNIA
8163 ROCHESTER AVENUE, SUITE 100
RANCHO CUCAMONGA
CALIFORNIA 91730-0729

TEL: 909-987-0909
www.wlcarchitects.com

LONGFELLOW ELEMENTARY SCHOOL HVAC REPLACEMENT

COMPTON UNIFIED SCHOOL DISTRICT
1101 S DWIGHT AVE.
COMPTON, CA 90220

LICENSED ARCHITECT — KEVIN GRAHAM — C-26046 — 03-31-19 — STATE OF CALIFORNIA

REGISTERED PROFESSIONAL ENGINEER — ROBERT BANKERD — No. M29253 — Exp. 6/30/19 — MECHANICAL — STATE OF CALIFORNIA

CONSULTANT

R.E. 19-23

IDENTIFICATION STAMP
DIV. OF THE STATE ARCHITECT
OFFICE OF REGULATION SERVICES
APPL 03-118423
AC — FLS — SS
DATE MAR 0 6 2018

NO	DATE	BY	DESCRIPTION
			REVISIONS

DRAWN: KC	CHECKED:
DATE: 3/6/2018	SCALE:
PROJECT NUMBER: 570064	

BUILDING K DEMO AND REMODEL FLOOR PLANS

DRAWING NUMBER: M-2.6

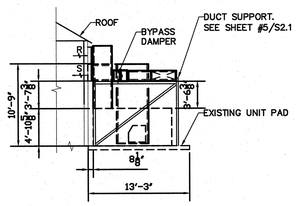

SECTION A-A

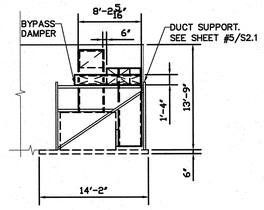

SECTION B-B

MECHANICAL SECTION BUILDING E

SCALE NONE 6

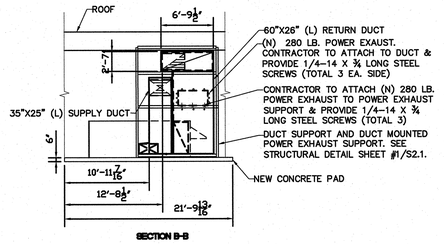

SECTION B-B

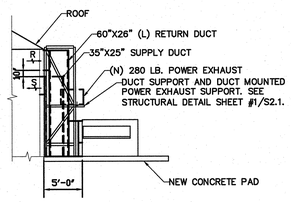

SECTION A-A

MECHANICAL SECTION BUILDING F

SCALE NONE 3

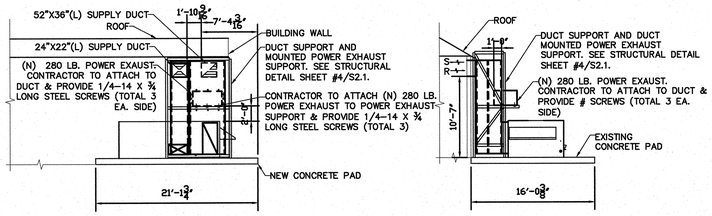

SECTION B-B

SECTION A-A

MECHANICAL SECTION BUILDING K

SCALE NONE 5

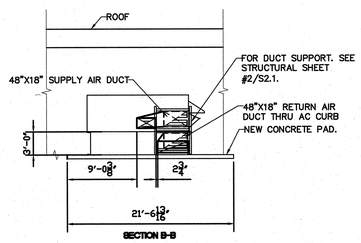

SECTION B-B

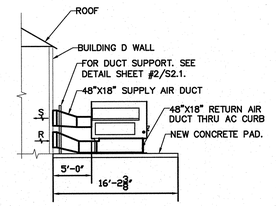

SECTION A-A

MECHANICAL SECTION BUILDING D

SCALE NONE 2

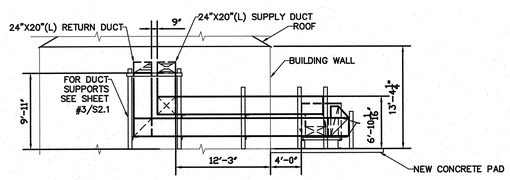

SECTION A-A

MECHANICAL SECTION BUILDING G

SCALE NONE 4

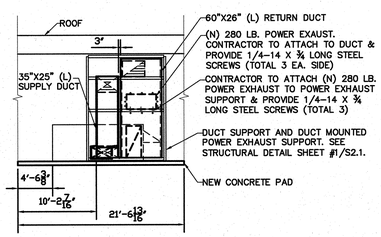

SECTION B-B

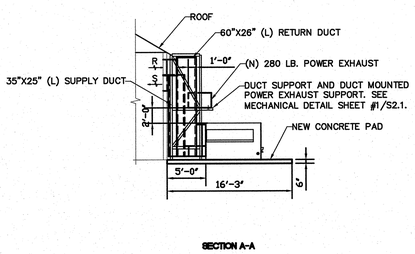

SECTION A-A

MECHANICAL SECTION BUILDING C

SCALE NONE 1

ARCHITECTS
WLC
CLIENT FOCUSED • PASSION DRIVEN

SOUTHERN CALIFORNIA
8163 ROCHESTER AVENUE, SUITE 100
RANCHO CUCAMONGA
CALIFORNIA 91730-0729

TEL: 909-987-0909

www.wlcarchitects.com

LONGFELLOW ELEMENTARY SCHOOL HVAC REPLACEMENT

COMPTON UNIFIED SCHOOL DISTRICT
1101 S DWIGHT AVE.
COMPTON, CA 90220

LICENSED ARCHITECT — MARK GRAHAM C-26046 03-31-19 — STATE OF CALIFORNIA

REGISTERED PROFESSIONAL ENGINEER — ROBERT BANEKOV No. M29253, Exp. 6/30/19 — MECHANICAL — STATE OF CALIFORNIA

CONSULTANT

IDENTIFICATION STAMP
DIV. OF THE STATE ARCHITECT
OFFICE OF REGULATION SERVICES
APPL 03-118423
AC — FLS — SS KEY
DATE MAR 0 9 2018
FILE: 19-23

NO	DATE	BY	DESCRIPTION
			REVISIONS

DRAWN: KC	CHECKED:
DATE: 3/6/2018	SCALE:
PROJECT NUMBER: 570064	

MECHANICAL SECTIONS

DRAWING NUMBER: M-3.1

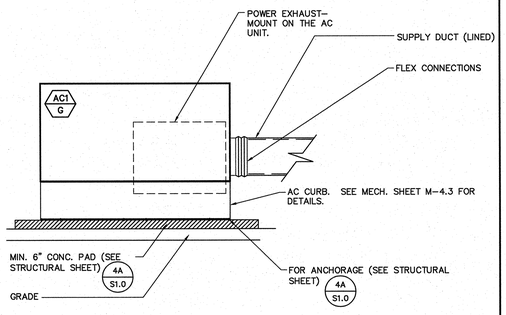

AC UNIT WITH CURB MOUNTING DETAIL

SCALE NONE | 13

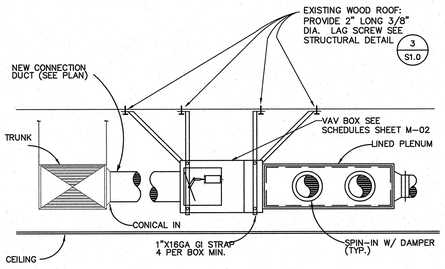

VAV BOX DETAIL

SCALE NONE | 11

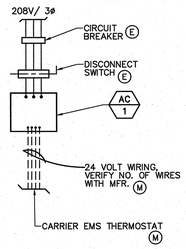

A/C CONTROL

SCALE NONE | 7

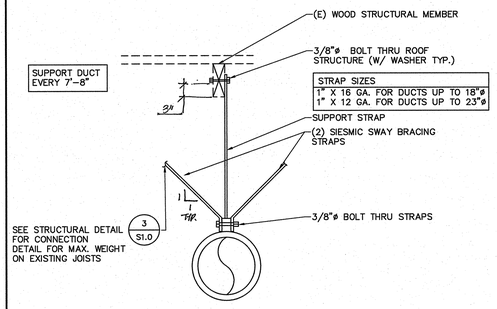

DUCT SUPPORT DETAIL – WOOD

SCALE NONE | 4

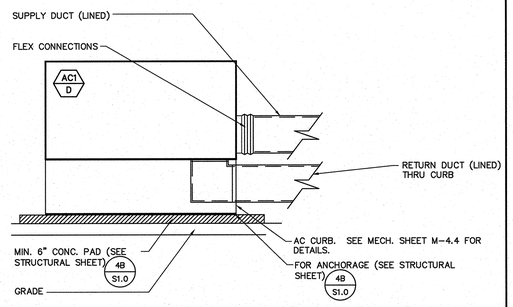

AC UNIT WITHOUT CURB MOUNTING DETAIL

SCALE NONE | 10

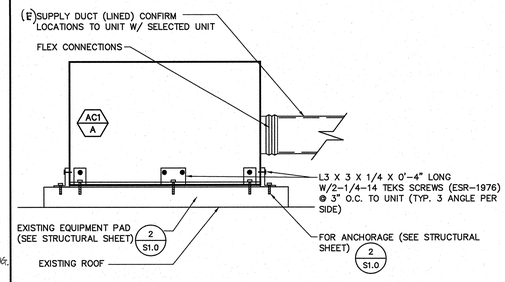

AC UNIT WITHOUT CURB MOUNTING DETAIL

SCALE NONE | 6

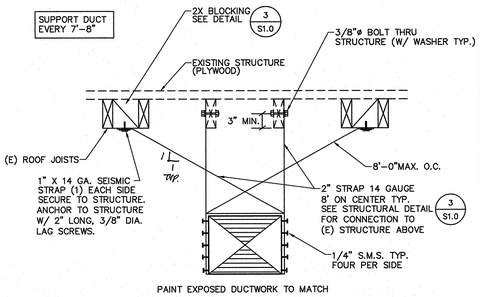

EXPOSED DUCT SUPPORT DETAIL – WOOD

SCALE NONE | 3

AC UNIT WITH DUCT THRU CURB MOUNTING DETAIL

SCALE NONE | 9

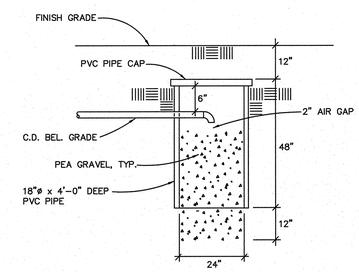

DRYWELL DETAIL

SCALE NONE | 5

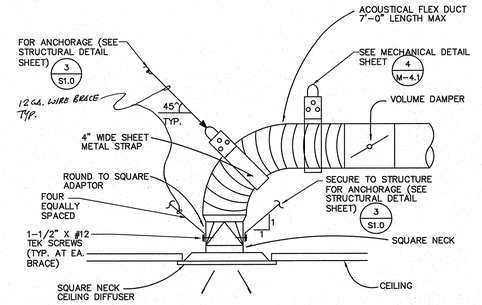

CEILING DIFFUSER DETAIL

SCALE NONE | 2

NOT USED

SCALE NONE | 12

NOT USED

SCALE NONE | 8

NOT USED

SCALE NONE

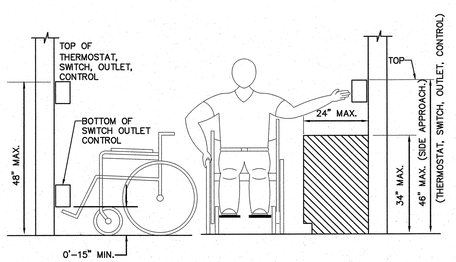

ADA CONTROL, DEVICE MOUNTING HEIGHT DETAIL

SCALE NONE | 1

ARCHITECTS
WLC
CLIENT FOCUSED • PASSION DRIVEN
SOUTHERN CALIFORNIA
8163 ROCHESTER AVENUE, SUITE 100
RANCHO CUCAMONGA
CALIFORNIA 91730-0729
TEL: 909-987-0909
www.wlcarchitects.com

LONGFELLOW ELEMENTARY SCHOOL HVAC REPLACEMENT

COMPTON UNIFIED SCHOOL DISTRICT
1101 S DWIGHT AVE.
COMPTON, CA 90220

LICENSED ARCHITECT MARK GRAHAM C-26046 03-31-19 STATE OF CALIFORNIA

REGISTERED PROFESSIONAL ENGINEER MARK BANERJEE No. M29253 Exp. 6/30/19 MECHANICAL STATE OF CALIFORNIA

CONSULTANT

IDENTIFICATION STAMP
DIV. OF THE STATE ARCHITECT
OFFICE OF REGULATION SERVICES
APPL 03-118423
AC FLS SS
DATE MAY 0 6 2019
FILE: 19-23

NO	DATE	BY	DESCRIPTION
1			REVISIONS

DRAWN: KC | CHECKED:
DATE: 3/6/2018 | SCALE:
PROJECT NUMBER: 570064

MECHANICAL DETAILS

DRAWING NUMBER: M-4.1

DETAIL-3

MAKE	MAKE	TYPE	SIZE	CURB WT
AC-1/G	CARRIER	48LCB	12A	220#

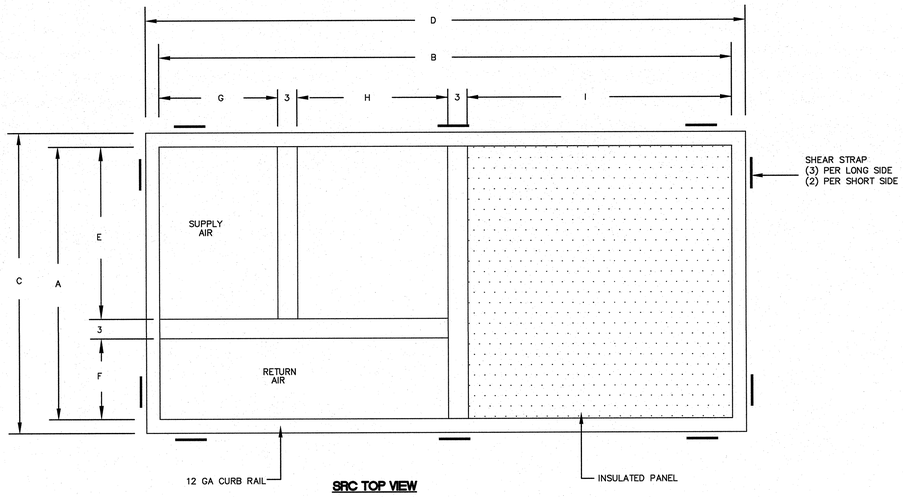

SRC TOP VIEW

A	B	C	D	E	F	G	H	I			
54-1/4	105-3/4	57-3/4	109-1/4	35-7/16	15-13/16	29-7/16	20-15/16	52-7/8			
						J	K	L	M	N	O
						60-1/16	111-3/4	3	3	109-3/4	58-1/16

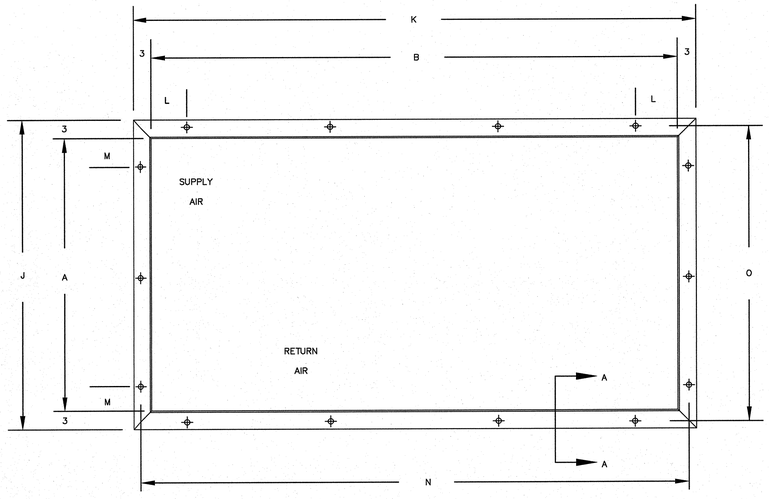

SRC FOOTPRINT

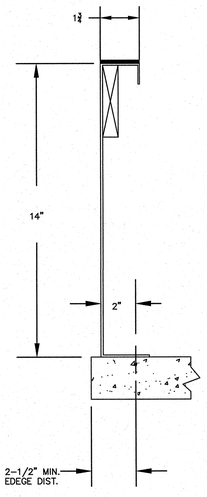

SECTION A-A

NOTES:

1. N & O DIMENSIONS ARE CENTERLINES OF ANCHOR HOLES IN CURB BOTTOM FLANGE.
2. DUCT SUPPORTS NOT SHOWN FOR CLARITY.
3. FOR ANCHORAGE, SEE STRUCTURAL DETAIL SHEET #4/S1.0.

TOP AND BOTTOM CURB DETAILS — SCALE NONE — 3

DETAIL-2

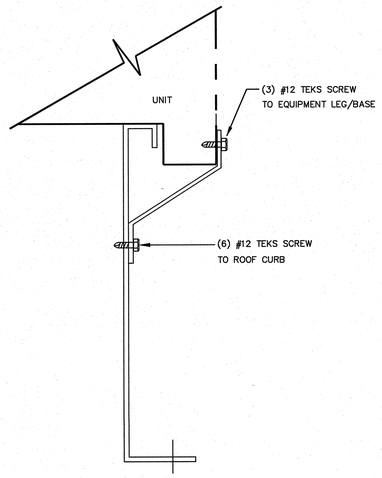

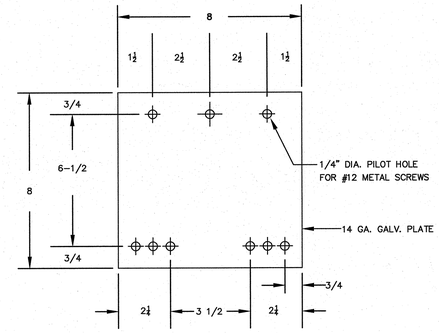

SEISMIC STRAP

ISOLATOR AND SEISMIC STRAP DETAIL — SCALE NONE — 2

DETAIL-1

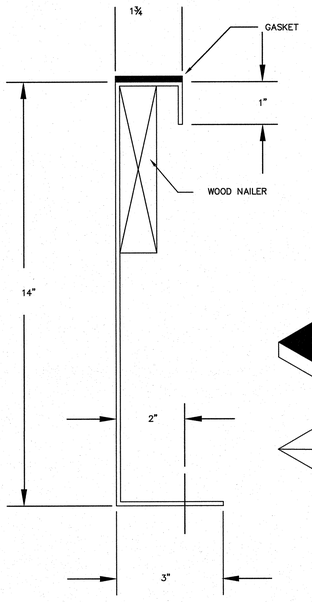

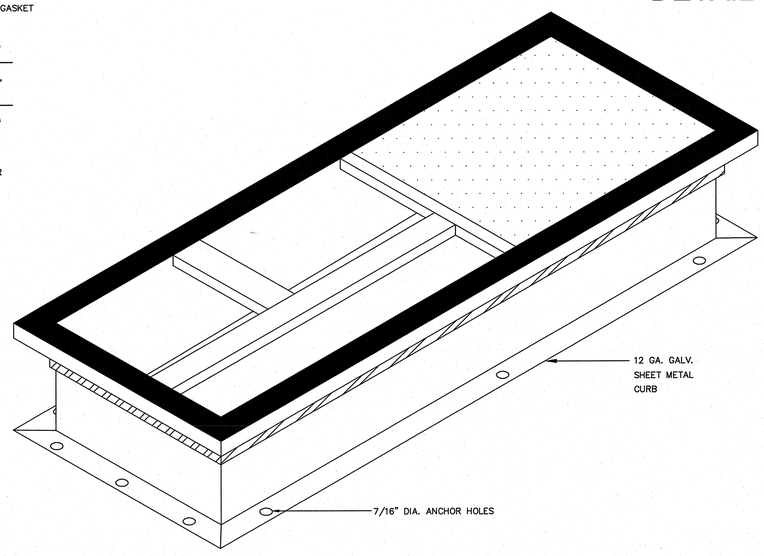

NOTES:

1. FOR ANCHOR REQUIREMENTS AND DETAILS OF ISOLATORS AND SEISMIC STRAPS, SEE DETAIL 2, 3.
2. SUBMITTED ROOF CURBS ARE LEVEL. PITCHED ROOF CURBS ARE AVAILABLE UPON REQUEST TO MATCH ROOF SLOPE.
3. NOT FOR CONSTRUCTION, ALL DIMENSIONS REQUIRE FINAL REVIEW AT COMMENCEMENT OF PROJECT

AC1/G UNITS ISO CURB MOUNTING EQUIPMENT PLATFORM DETAIL — SCALE NONE — 1

WLC ARCHITECTS
CLIENT FOCUSED • PASSION DRIVEN
SOUTHERN CALIFORNIA
8163 ROCHESTER AVENUE, SUITE 100
RANCHO CUCAMONGA
CALIFORNIA 91730-0729
TEL: 909-987-0909
www.wlcarchitects.com

LONGFELLOW ELEMENTARY SCHOOL
HVAC REPLACEMENT
COMPTON UNIFIED SCHOOL DISTRICT
1101 S DWIGHT AVE.
COMPTON, CA 90220

LICENSED ARCHITECT MARK GRAHAM C-26046 03-31-19 STATE OF CALIFORNIA

REGISTERED PROFESSIONAL ENGINEER ABBY BANERJEE No. M29253 Exp. 6/30/19 MECHANICAL STATE OF CALIFORNIA

CONSULTANT

IDENTIFICATION STAMP
DIV. OF THE STATE ARCHITECT
OFFICE OF REGULATION SERVICES
APPL 03-118423
AC — FLS — SS
DATE

FILE: 19-23

NO	DATE	BY	DESCRIPTION

REVISIONS

DRAWN: KC — CHECKED:
DATE: 3/6/2018 — SCALE:
PROJECT NUMBER: 570064

MECHANICAL DETAILS

DRAWING NUMBER: M-4.3

LONGFELLOW ELEMENTARY SCHOOL HVAC REPLACEMENT
COMPTON UNIFIED SCHOOL DISTRICT
1101 S DWIGHT AVE.
COMPTON, CA 90220

THIS APPLICATION DSA A#03-118423 SHALL NOT BE CLOSED WITH CERTIFICATION UNTIL DSA A#03-119653 IS CLOSED WITH CERTIFICATION.

GENERAL NOTES

1. THESE DRAWINGS DO NOT CONTAIN THE NECESSARY COMPONENTS FOR CONSTRUCTION SAFETY.

2. LOCATIONS OF ALL UTILITIES SHOWN ARE APPROXIMATE AND CONTRACTOR SHALL EXERCISE EXTREME CAUTION IN EXCAVATING AND TRENCHING ON THIS SITE TO AVOID INTERCEPTING EXISTING PIPING OR CONDUITS. IT SHALL BE THE RESPONSIBILITY OF THE CONTRACTOR TO LOCATE ALL EXISTING UTILITIES WHETHER SHOWN HEREON OR NOT AND TO PROTECT THEM FROM DAMAGE. THE ARCHITECT IS NOT RESPONSIBLE FOR THE LOCATION OF UNDERGROUND UTILITIES OR STRUCTURES WHETHER OR NOT SHOWN OR DETAILED AND INSTALLED BY ANY OTHER CONTRACT. THE CONTRACTOR SHALL IMMEDIATELY NOTIFY THE ARCHITECT SHOULD ANY UNIDENTIFIED CONDITIONS BE DISCOVERED. THE CONTRACTOR SHALL BEAR ALL EXPENSE OF REPAIR OR REPLACEMENT OF UTILITIES OR OTHER PROPERTY DAMAGED BY OPERATIONS IN CONJUNCTION WITH THE EXECUTION OF THIS WORK.

3. THESE DOCUMENTS AND THE IDEAS AND DESIGNS INCORPORATED HEREIN, AS AN INSTRUMENT OF PROFESSIONAL SERVICE, ARE THE PROPERTY OF WLC ARCHITECTS, INC., AND ARE NOT TO BE USED, IN WHOLE OR IN PART, FOR ANY OTHER PROJECT WITHOUT THE WRITTEN AUTHORIZATION OF WLC ARCHITECTS, INC.

4. THE WORK SHOWN ON THESE DRAWINGS AS EXISTING CONDITIONS WAS PREPARED FROM INFORMATION FURNISHED BY THE OWNER. WHILE THIS INFORMATION IS BELIEVED TO BE RELIABLE, WLC ARCHITECTS, INC. IS NOT RESPONSIBLE FOR THE ACCURACY OR ADEQUACY OF ANY WORK SHOWN AS EXISTING NOR IS WLC ARCHITECTS, INC. RESPONSIBLE FOR ANY ERRORS OR OMISSIONS WHICH MAY HAVE BEEN INCORPORATED INTO THESE DRAWINGS AS A RESULT.

5. EACH BIDDER SHALL POSSESS AT THE TIME OF BID A CLASS B OR THE APPROPRIATE CLASS C CONTRACTOR'S LICENSE PURSUANT TO PUBLIC CONTRACT CODE SECTION 3300 AND BUSINESS AND PROFESSIONS CODE SECTION 7028.15. THE SUCCESSFUL BIDDER MUST MAINTAIN THE LICENSE THROUGHOUT THE DURATION OF THIS CONTRACT.

6. FIRE SAFETY DURING CONSTRUCTION

   A. GENERAL: FIRE SAFETY DURING CONSTRUCTION SHALL COMPLY WITH CALIFORNIA FIRE CODE (CFC) CALIFORNIA CODE OF REGULATIONS (CCR) TITLE 24, PART 9, CHAPTER 5 AND CHAPTER 33.

   B. ACCESS ROADS: FIRE DEPARTMENT ACCESS ROADS SHALL BE ESTABLISHED AND MAINTAINED IN ACCORDANCE WITH CHAPTER 5, SECTION 501.4 AND CHAPTER 33, SECTION 3310.

   C. WATER SUPPLY: WATER MAINS AND HYDRANTS SHALL BE OPERATIONAL IN ACCORDANCE WITH CHAPTER 5, SECTION 501.4 AND CHAPTER 33,SECTION 3312.

   D. BUILDING ACCESS: ACCESS TO BUILDINGS FOR THE PURPOSE OF FIREFIGHTING SHALL BE PROVIDED. CONSTRUCTION MATERIAL SHALL NOT BLOCK ACCESS TO BUILDINGS, HYDRANTS OR FIRE APPLIANCES.

   E. ALTERATIONS OF BUILDINGS: SHALL COMPLY WITH APPLICABLE PROVISIONS OF CHAPTER 33.

   F. DEMOLITION OF BUILDINGS: SHALL COMPLY APPLICABLE PROVISIONS OF CHAPTER 33.

   G. FIRE WATCH: MAINTAIN FIRE WATCH WHEN REQUIRED BY THE BUILDING OFFICIAL AND WHEN EXISTING FIRE PROTECTION SYSTEMS ARE SHUT DOWN FOR ALTERATIONS IN ACCORDANCE WITH CHAPTER 33, SECTION 3304.5. FIRE WATCH SHALL REMAIN IN EFFECT UNTIL EXISTING FIRE PROTECTION SYSTEMS ARE RETURNED TO SERVICE OR AS ALLOWED BY THE BUILDING OFFICIAL.

7. PENETRATIONS TO FIRE RATED MATERIALS OR ASSEMBLIES SHALL BE RESTORED TO EQUAL RATING. FIRE STOP SYSTEMS AS LISTED BY UNDERWRITERS LABORATORIES SHALL BE INSTALLED PER FIRE RESISTANCE DIRECTORY. FIRE STOP SYSTEMS SHALL BE AS SPECIFIED.

8. NONRESIDENTIAL ENERGY STANDARDS COMPLIANCE STATEMENT (TITLE 24, PART 6):

   THE DESIGN INDICATED HEREIN COMPLIES WITH THE REQUIREMENTS OF THE ENERGY CONSERVATION STANDARDS OF TITLE 24, PART 6, CALIFORNIA CODE OF REGULATIONS. THE PROPOSED BUILDING(S) WILL BE IN COMPLIANCE WITH THE ENERGY CONSERVATION STANDARDS PROVIDED IT (THEY) IS (ARE) BUILT ACCORDING TO THESE DRAWINGS AND SPECIFICATIONS AND PROVIDED ANY FUTURE IMPROVEMENTS ARE COMPLETED ACCORDING TO THE REQUIREMENTS OF TITLE 24, PART 6, CALIFORNIA CODE OF REGULATIONS. THESE PLANS AND SPECIFICATIONS HAVE BEEN PREPARED TO INCLUDE ALL SIGNIFICANT ENERGY CONSERVATION FEATURES REQUIRED FOR COMPLIANCE WITH THE STANDARDS. BUILDING AREAS THAT ARE UNCONDITIONED AND/OR NOT SUBJECT TO THE STANDARDS ARE INDICATED ON THE PLANS.

8. (CONT) ENVELOPE MANDATORY MEASURES:

   A. INSTALLED INSULATING MATERIALS SHALL HAVE BEEN CERTIFIED BY THE MANUFACTURER TO COMPLY WITH THE CALIFORNIA QUALITY STANDARDS FOR INSULATING MATERIAL.

   B. ALL INSULATING MATERIALS SHALL BE INSTALLED IN COMPLIANCE WITH THE FLAME SPREAD RATING AND SMOKE DENSITY REQUIREMENTS OF TITLE 24, PART 2, CALIFORNIA CODE OF REGULATIONS, SECTIONS 720 AND 2603.

   C. ALL EXTERIOR JOINTS AND OPENINGS IN THE BUILDING ENVELOPE THAT ARE POTENTIAL AND OBSERVABLE SOURCES OF AIR LEAKAGE SHALL BE CAULKED, GASKETED, WEATHERSTRIPPED OR OTHERWISE SEALED.

   D. SITE CONSTRUCTED DOORS, WINDOWS, AND SKYLIGHTS SHALL BE CAULKED BETWEEN THE UNIT AND THE BUILDING, AND SHALL BE WEATHERSTRIPPED (EXCEPT FOR UNFRAMED GLASS DOORS AND FIRE DOORS).

   E. MANUFACTURED DOORS AND WINDOWS INSTALLED SHALL HAVE AIR INFILTRATION RATES CERTIFIED BY THE MANUFACTURER IN ACCORDANCE WITH TITLE 24, PART 6, CALIFORNIA CODE OF REGULATIONS, SECTION 110.6.

   F. MANUFACTURED FENESTRATION PRODUCTS IN THE ENVELOPE OF THE BUILDING, INCLUDING, BUT NOT LIMITED TO, WINDOWS, SLIDING GLASS DOORS, FRENCH DOORS, SKYLIGHTS, CURTAIN WALLS, AND GARDEN WINDOWS MUST BE LABELED FOR U-VALUE IN ACCORDANCE WITH THE (NFRC) NATIONAL FENESTRATION RATING COUNCIL'S INTERIM U-VALUE RATING PROCEDURE.

   G. DEMISING WALL INSULATION SHALL BE INSTALLED IN ALL OPAQUE PORTIONS OF FRAMED WALLS (EXCEPT DOORS).

9. PROOF LOAD TESTS FOR EXPANSION TYPE ANCHOR BOLTS:

   A. ANCHOR DIAMETER REFERS TO THE THREAD SIZE FOR THE WEDGE CATEGORY ANCHOR.

   B. APPLY PROOF TEST LOADS TO WEDGE ANCHORS WITHOUT REMOVING THE NUT IF POSSIBLE. IF NOT, REMOVE NUT AND INSTALL A THREADED COUPLER TO THE SAME TIGHTNESS OF THE ORIGINAL NUT USING A TORQUE WRENCH AND APPLY LOAD.

   C. REACTION LOADS FROM TEST FIXTURES MAY BE APPLIED CLOSE TO THE ANCHOR BEING TESTED, PROVIDED THE ANCHOR IS NOT RESTRAINED FROM WITHDRAWING BY THE FIXTURE(S).

   D. TEST EQUIPMENT IS TO BE CALIBRATED BY AN APPROVED TESTING LABORATORY IN ACCORDANCE WITH STANDARD RECOGNIZED PROCEDURES.

   E. THE FOLLOWING CRITERIA APPLY FOR THE ACCEPTANCE OF INSTALLED ANCHORS:

   1. HYDRAULIC RAM METHOD: THE ANCHOR SHOULD HAVE NO OBSERVABLE MOVEMENT AT THE APPLICABLE TEST LOAD. FOR WEDGE TYPE ANCHORS, A PRACTICAL WAY TO DETERMINE OBSERVABLE MOVEMENT IS THAT THE WASHER UNDER THE NUT BECOMES LOOSE. DROP IN ANCHORS ARE ONLY TO BE TESTED WITH THIS METHOD.

   2. TORQUE WRENCH METHOD: THE APPLICABLE TEST TORQUE MUST BE REACHED WITHIN THE FOLLOWING LIMITS FOR WEDGE ANCHORS: ONE-HALF (1/2) TURN OF THE NUT.

   3. IF MANUFACTURERS TORQUE IS LESS THAN SPECIFIED TEST TORQUE THE MANUFACTURERS LISTED TORQUE SHALL BE USED FOR TESTING.

   H. TESTING SHOULD OCCUR 24 HOURS MINIMUM AFTER INSTALLATION OF THE SUBJECT ANCHORS

   I. ALL EXPANSION TYPE ANCHOR BOLTS USED FOR STRUCTURAL APPLICATIONS SHALL BE TESTED. ALL ANCHOR BOLTS OF THE EXPANSION TYPE USED FOR NON STRUCTURAL APPLICATIONS (LOADED IN EITHER PULLOUT OR SHEAR) SHALL HAVE 50 PERCENT OF THE BOLTS (ALTERNATE BOLTS IN ANY GROUP ARRANGEMENT ALLOWED BY THE TYPE OF SUBSTRATE AND DIAMETER OF BOLT LISTED BELOW UNDER TEST VALUES TABLE) PROOF TESTED IN TENSION TO TWICE THE ALLOWABLE TENSION LOAD. IF THERE ARE ANY FAILURES, THE IMMEDIATELY ADJACENT BOLTS MUST THEN ALSO BE TESTED. TESTING SHALL BE PERFORMED IN ACCORDANCE WITH TITLE 24, PART 2, SECTION 1910A.5

   J. ALL BOLTS MUST HAVE ICC/ES APPROVAL.

   A. ALL ANCHOR BOLTS OF THE EXPANSION TYPE INSTALLED IN CONCRETE SHALL BE ONE OF THE FOLLOWING:

   1. ITW RAMSET/REDHEAD-WEDGE ANCHOR-ICC/ES NO. 2427
   2. HILTI, INC.- QWIK BOLT TZ -WEDGE ANCHOR-ICC/ES NO. 1917
   3. SIMPSON - STRONGBOLT 2 - WEDGE ANCHOR - ICC/ES NO. 3037

MIMIMUM TEST VALUES
NORMALWEIGHT OR LIGHTWEIGHT CONCRETE

ANCHOR		WEDGE		---		
DIA. (IN)	TENSION LOAD (LBS)	TORQUE (FT-LBS)	EMBED MENT (IN)	---	---	---
---	---	---	---	---	---	---
3/8	1,100	25	2	---	---	---
1/2	2,000	50	3-1/4	---	---	---
5/8	2,300	80	4-1/4	---	---	---
3/4	3,700	150	4-3/4	---	---	---

   B. ALL ANCHOR BOLTS OF THE EXPANSION TYPE INSTALLED IN GROUT FILLED MASONRY SHALL BE ONE OF THE FOLLOWING:

   1. HILTI, INC.-KWIK BOLT III-WEDGE ANCHOR-ICC/ES NO. 1385
   2. SIMPSON-STRONGBOLT 2-WEDGE ANCHOR-IAMPO NO. ER-240

MIMIMUM TEST VALUES
GROUT FILLED CONCRETE MASONRY

ANCHOR		WEDGE		---		
DIA. (IN)	TENSION LOAD (LBS)	TORQUE (FT-LBS)	EMBED MENT (IN)	---	---	---
1/4	1,080	4	2	---	---	---
3/8	1,564	15	2-1/2	---	---	---
1/2	1,810	25	3-1/2	---	---	---
5/8	2,484	65	4	---	---	---
3/4	3,290	120	4-3/8	---	---	---

11. POWDER DRIVEN CONCRETE FASTENERS:

   A. GENERAL: USE OF POWDER DRIVEN CONCRETE FASTENERS FOR TENSION LOADS IS LIMITED TO SUPPORT OF MINOR LOADS LIKE ACOUSTICAL CEILINGS, DUCT WORK, CONDUIT.

   B. ALLOWABLE LOADS: IN GENERAL, LOADS SHOULD BE LIMITED TO LESS THAN 100 POUNDS. HOWEVER, GREATER LOADS MAY BE PERMITTED FOR SPECIAL CASES WHEN APPROVED BY THE CHECKING SUPERVISOR OR FIELD ENGINEER.

   C. TESTING: THE OPERATOR, TOOL, AND FASTENER SHALL BE PREQUALIFIED BY THE PROJECT INSPECTOR. HE SHALL OBSERVE THE TESTING OF THE FIRST 10 FASTENER INSTALLATIONS. A TEST "PULL-OUT" LOAD OF NOT LESS THAN TWICE THE DESIGN LOAD, OR 200 POUNDS, WHICHEVER IS GREATER SHALL BE APPLIED TO THE PIN IN SUCH A MANNER AS NOT TO RESIST THE SPALLING TENDENCY OF THE CONCRETE AROUND THE PIN. THEREAFTER, RANDOM TESTS UNDER THE PROJECT INSPECTOR'S SUPERVISION SHALL BE MADE OF APPROXIMATELY 1 IN 10 PINS, EXCEPT THAT WHEN THE DESIGN LOAD EXCEEDS 100 POUNDS, ONE HALF OF THE PINS SHALL BE TESTED. SHOULD FAILURE OCCUR ON ANY PIN TESTED, ALL INSTALLATIONS MUST BE TESTED AND UNFAIR PINS REPLACED.

   D. ALL POWDER DRIVEN CONCRETE FASTENERS SHALL BE ONE OF THE FOLLOWING:

   1. HILTI, INC.
      X-CP 72 PINS - WOOD PLATE - ICC/ES NO. 2379
      X-U PINS - STEEL TRACK - ICC/ES NO. 2269
   2.. ITW RAMSET/REDHEAD
      DRIVE PIN - WOOD PLATE - ICC/ES NO. 2690
      DRIVE PIN - STEEL TRACK - ICC/ES NO. 1799
   3. SIMPSON STRONG-TIE CO., INC.
      PDPWL-300MG - WOOD PLATE - ICC/ES NO. 2138
      PDPA-125- STEEL TRACK - ICC/ES NO. 2138

12. INSPECTOR OF RECORD REQUIREMENTS

   A. ONE OR MORE INSPECTORS EMPLOYED BY THE OWNER IN ACCORDANCE WITH THE REQUIREMENTS OF TITLE 24 OF THE CALIFORNIA CODE OF REGULATIONS WILL BE ASSIGNED TO THE WORK. THE INSPECTORS DUTIES ARE SPECIFICALLY DEFINED IN SECTION 4-342 OF SAID TITLE 24, PART 1 AND IN ADDITION SHALL BE AS STIPULATED IN INTERPRETATION OF REGULATION DOCUMENT IR A-8.

   B. INSPECTOR SHALL BE CERTIFIED AS A CLASS 3 INSPECTOR THROUGH THE DIVISION OF THE STATE ARCHITECT INSPECTOR EXAMINATION PROGRAM. INSPECTOR SHALL ALSO BE SPECIFICALLY APPROVED BY THE DIVISION OF THE STATE ARCHITECT FOR THIS PROJECT AT LEAST 10 DAYS PRIOR TO THE START OF ANY WORK FOR THIS PROJECT.

14. ALL WORK SHOWN ON THESE DRAWINGS SHALL COMPLY WITH THE REQUIREMENTS OF TITLE 24, CALIFORNIA CODE OF REGULATIONS (CCR).

15. CHANGES TO THE APPROVED DRAWINGS AND SPECIFICATIONS SHALL BE MADE BY AN ADDENDUM OR A CONSTRUCTION CHANGE DOCUMENT APPROVED BY THE DIVISION OF THE STATE ARCHITECT, AS REQUIRED BY TITLE 24, CCR, PART 1, SECTION 4-338.

16. THE INTENT OF THESE DRAWINGS AND SPECIFICATIONS IS THAT THE WORK OF THE ADDITION, ALTERATION OR RECONSTRUCTION IS IN COMPLIANCE WITH THE REQUIREMENTS OF TITLE 24, CALIFORNIA CODE OF REGULATIONS. SHOULD ANY CONDITIONS SUCH AS DETERIORATION OR NON-COMPLYING CONSTRUCTION BE DISCOVERED WHICH IS NOT IDENTIFIED BY THE CONTRACT DOCUMENTS WHEREIN THE FINAL WORK WOULD NOT COMPLY WITH THE REQUIREMENTS OF TITLE 24, CALIFORNIA CODE OF REGULATIONS, THE CONTRACTOR SHALL IMMEDIATELY NOTIFY THE OWNER AND THE ARCHITECT OF THE CONDITION IN WRITING. NECESSARY INFORMATION REQUIRED TO CORRECT THE CONDITIONS ENCOUNTERED WILL BE ISSUED BY THE ARCHITECT. A CHANGE ORDER MAY BE ISSUED TO ADJUST THE CONTRACT SUM OR TIME COMMENSURATE WITH THE AMOUNT OF ADDITIONAL WORK REQUIRED IF ANY. A CONSTRUCTION CHANGE DOCUMENT SHALL BE APPROVED BY THE DIVISION OF THE STATE ARCHITECT PRIOR TO PROCEEDING WITH THE WORK REQUIRED BY THE CHANGE ORDER.

17. DSA ACCEPTED TESTING LABORATORY DIRECTLY EMPLOYED BY THE DISTRICT (OWNER) SHALL CONDUCT ALL REQUIRED TEST AND INSPECTIONS FOR THE PROJECT.

I find that: ☒ All drawings or sheets listed on the cover or index sheet ☐ This drawing or page

☒ is/are in general conformance with the project design intent, and
☒ has/have been coordinated with the project plans and specifications.

Mark Graham — Signature — 03/06/18 Date

Architect or Engineer designated to be in general responsible charge

MARK GRAHAM — Print Name

C-26046 — License Number — 03/31/18 — Expiration Date

☐ is/are in general conformance with the project design intent, and
☐ has/have been coordinated with the project plans and specifications.

Signature — Date

Architect or Engineer delegated responsibility for this portion of the work

Print Name

License Number — Expiration Date

PROJECT TEAM

PROJECT ADDRESS
LONGFELLOW ELEMENTARY SCHOOL
1101 S. DWIGHT STREET
COMPTON, CA 90220
PHONE: 310-898-6460

OWNER
COMPTON UNIFIED SCHOOL DISTRICT
501 S SANTA FE AVENUE
COMPTON, CA 90221
PHONE: 310-604-6507 FAX: 310-763-0105

ARCHITECT
WLC ARCHITECTS, INC.
8163 ROCHESTER AVENUE., SUITE 100
RANCHO CUCAMONGA, CA 91730
PHONE: 909-987-0909 FAX: 909-980-9980

MECHANICAL ENGINEER
OED
5200 E LA PALMA AVE
ANAHEIM, CA 92807
PHONE: 714-693-2277

ELECTRICAL ENGINEER
A&F ENGINEERING GROUP, INC.
9320 BASELINE RD., SUITE C
RANCHO CUCAMONGA, CA 91701
PHONE: 909-941-3008 FAX: 909-941-8211

SCOPE OF WORK DESCRIPTION

THE SCOPE OF THE WORK AS STATED BELOW IS FOR DSA PLAN REVIEW PURPOSES ONLY AND DOES NOT CONSTITUTE A DETAILED AND FULL EXPLANATION OF THE REQUIREMENTS OF THE CONTRACT DOCUMENTS.

REPLACE (1) EXISTING ROOF MOUNTED HVAC UNIT AT ADMINISTRATION BUILDING A AND (5) EXISTING FLOOR MOUNTED HVAC UNITS AT CLASSROOM BUILDINGS C, D, F, G AND K WITH NEW PACKAGE HVAC UNITS, AND MODIFY (1) EXISTING FLOOR MOUNTED HVAC UNIT AT CLASSROOM BUILDING E AND SITE WORKS.

VICINITY MAP

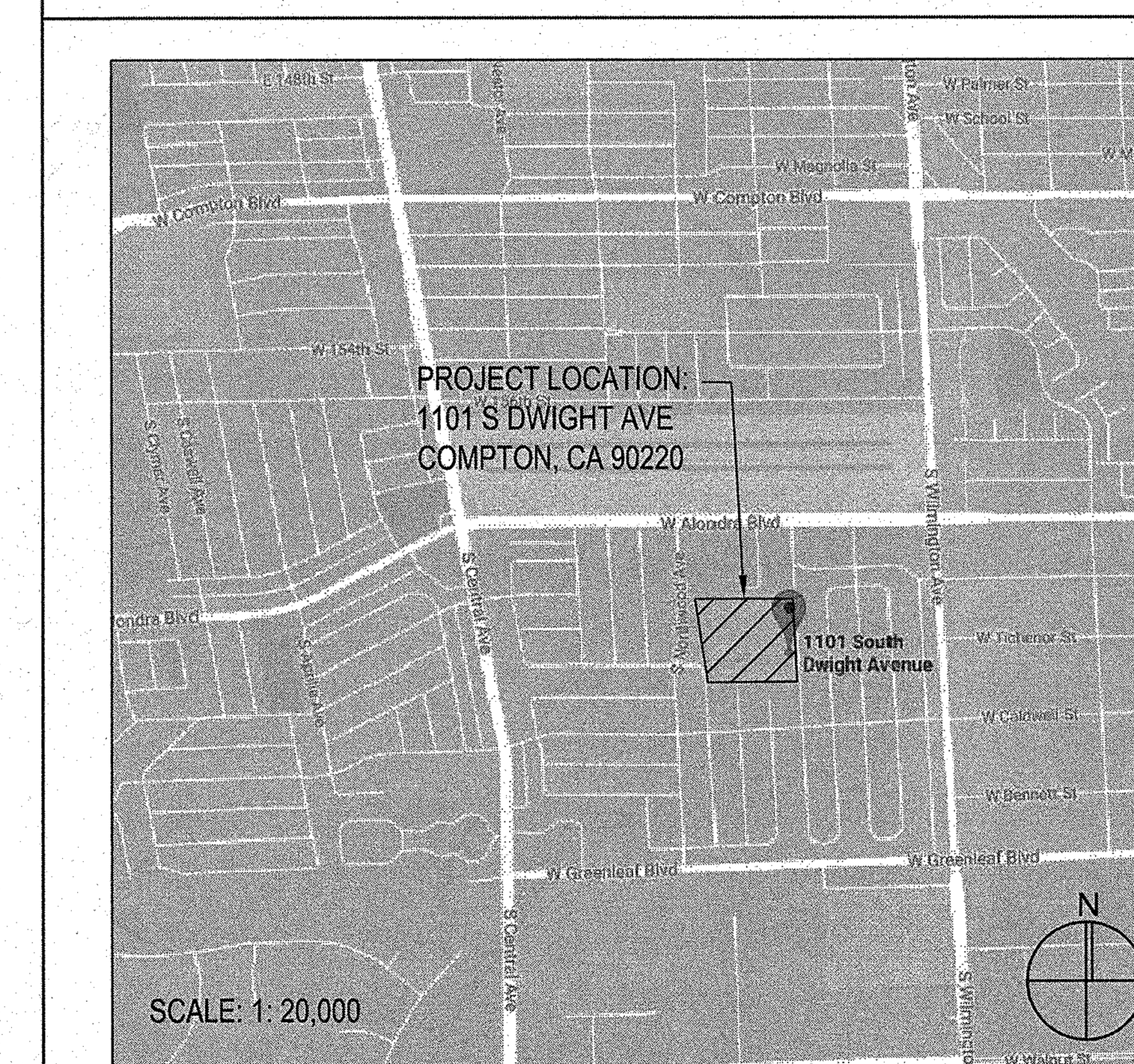

SHEET INDEX

DRAWING REF NO	DESCRIPTION
ARCHITECTURAL	
A0.1	GENERAL NOTE AND PROJECT DIRECTORY
A0.2	ARCHITECTURAL DRAWINGS ABBREVIATIONS AND GOVERNING CODE
A1.0	SITE PLAN AND BUILDING A DEMO AND NEW ROOF PLANS
A2.1	BUILDING C AND D ENLARGED DEMO AND NEW FLOOR PLANS
A2.2	BUILDING F AND G ENLARGED DEMO AND NEW FLOOR PLANS
A2.3	BUILDING K ENLARGED DEMO AND NEW FLOOR PLANS AND DETAILS
A3.1	BUILDING K ENLARGED DEMO AND NEW REFLECTED CEILING PLANS
STRUCTURAL	
S1.0	GENERAL NOTE AND DETAILS
S1.1	DETAILS
S1.2	DETAILS
S2.1	BUILDING C, D, E, F, G AND K PARTIAL FLOOR PLANS
MECHANICAL	
M-0.1	MECHANICAL GENERAL NOTE AND LEGEND
M-0.2	MECHANICAL SCHEDULES
M-2.0	BUILDING A DEMOLITION AND REMODEL FLOOR PLANS
M-2.1	BUILDING C DEMOLITION AND REMODEL FLOOR PLANS
M-2.2	BUILDING D DEMOLITION AND REMODEL FLOOR PLANS
M-2.3	BUILDING E DEMOLITION AND REMODEL FLOOR PLANS
M-2.4	BUILDING F DEMOLITION AND REMODEL FLOOR PLANS
M-2.5	BUILDING G DEMOLITION AND REMODEL FLOOR PLANS
M-2.6	BUILDING K DEMOLITION AND REMODEL FLOOR PLANS
M-3.1	MECHANICAL SECTIONS
M-4.1	MECHANICAL DETAILS
M-4.3	MECHANICAL DETAILS
M-4.4	MECHANICAL DETAILS
M-5.1	WIRING DIAGRAM DETAILS
M-5.2	WIRING DIAGRAM DETAILS
M-5.3	WIRING DIAGRAM DETAILS
M-5.4	WIRING DIAGRAM DETAILS
M-5.5	WIRING DIAGRAM DETAILS
M-6.0	TITLE 24 BUILDING A
M-6.1	TITLE 24 BUILDING C
M-6.2	TITLE 24 BUILDING D
M-6.3	TITLE 24 BUILDING E
M-6.4	TITLE 24 BUILDING F
M-6.5	TITLE 24 BUILDING G
M-6.6	TITLE 24 BUILDING K
ELECTRICAL	
E0.1	GENERAL NOTES SYMBOL LIST & DETAILS
E0.2	DEMOLITION AND REMODEL SINGLE LINE DIAGRAM
E0.3	PANEL SCHEDULES
E1.0	SITE PLAN
E2.1	BUILDING C DEMOLITION AND REMODEL PLANS
E2.2	BUILDING D DEMOLITION AND REMODEL PLANS
E2.3	BUILDING E DEMOLITION AND REMODEL PLANS
E2.4	BUILDING F DEMOLITION AND REMODEL PLANS
E2.5	BUILDING G DEMOLITION AND REMODEL PLANS
E2.6	BUILDING K DEMOLITION AND REMODEL PLANS

WLC ARCHITECTS
CLIENT FOCUSED • PASSION DRIVEN
SOUTHERN CALIFORNIA
8163 ROCHESTER AVENUE, SUITE 100
RANCHO CUCAMONGA
CALIFORNIA 91730-0729
TEL: 909-987-0909
www.wlcarchitects.com

LONGFELLOW ELEMENTARY SCHOOL
HVAC REPLACEMENT
COMPTON UNIFIED SCHOOL DISTRICT
1101 S DWIGHT AVE.
COMPTON, CA 90220

LICENSED ARCHITECT — MARK GRAHAM — C-26046 — 03-31-19 — STATE OF CALIFORNIA

CONSULTANT

IDENTIFICATION STAMP
DIV. OF THE STATE ARCHITECT
OFFICE OF REGULATION SERVICES
APPL 03-118423
AC — FLS — SS EY
DATE MAR 0 8 2018
FILE: 19-23
46 SHEETS TOTAL + DSA 103 + SPECS.

NO	DATE	BY	DESCRIPTION
#	REVISIONS		

DRAWN:	CHECKED:
DATE: 3/6/2018	SCALE:
PROJECT NUMBER: 1723400	

GENERAL NOTES & PROJECT DIRECTORY

DRAWING NUMBER: A0.1

ARCHITECTURAL DRAWING ABBREVIATIONS

SYMBOLS

&	AND
∠	ANGLE
@	AT
CL	CENTERLINE
⊏	CHANNEL
ø	DIAMETER OR ROUND
(E)	EXISTING
(N)	NEW
d	PENNY (NAILS)
⊥	PERPENDICULAR
PL	PLATE
#	POUND OR NUMBER

A/C	AIR CONDITIONING
A/E	ARCHITECT/ENGINEER
AB	ANCHOR BOLT
ABAN	ABANDON
ABC	AGGREGATE BASE COURSE
ABV	ABOVE
AC	ASPHALTIC CONCRETE
ACC	ACCESS(IBLE)
ACST	ACOUSTICAL
ACT	ACOUSTICAL CEILING TILE
AD	AREA DRAIN
ADDM	ADDENDUM
ADH	ADHESIVE
ADJ	ADJUSTABLE
ADJC	ADJACENT
AFF	ABOVE FINISHED FLOOR
AFG	ABOVE FINISHED GRADE
AGGR	AGGREGATE
AHU	AIR HANDLING UNIT
AL	ALUMINUM
ALT	ALTERNATE
ANC	ANCHOR, ANCHORAGE
APLD	APPLIED
APPRX	APPROXIMATE
ARCH	ARCHITECT(URAL)
ASC	ABOVE SUSPENDED CEILING
ASPH	ASPHALT
ASSY	ASSEMBLY
ASYM	ASYMMETRICAL
AWG	AMERICAN WIRE GAGE

BC	BACK OF CURB
BD	BOARD
BITUM	BITUMINOUS
BLDG	BUILDING
BLK	BLOCK
BLKG	BLOCKING
BLW CLG	BELOW CEILING
BLW FFLR	BELOW FINISH FLOOR
BLW	BELOW
BM	BENCH MARK
BN	BOUNDARY NAILING
BOT	BOTTOM
BRCG	BRACING
BRDG	BRIDGING
BRG	BEARING
BRK	BRICK
BRKT	BRACKET
BRS	BRASS
BRZ	BRONZE
BS	BOTH SIDES
BSMT	BASEMENT
BTWN	BETWEEN
BUR	BUILT UP ROOFING
BW	BOTH WAYS

C&G	CURB AND GUTTER
CAB	CABINET
CAD	CADMIUM
CB	CATCH BASIN
CBB	CEMENTITIOUS BACKER BOARD
CEM	CEMENT
CER	CERAMIC
CFCI	CONTRACTOR FURNISH CONTRACTOR INSTALLED
CFLG	COUNTERFLASHING
CFOI	CONTRACTOR FURNISH OWNER INSTALLED
CG	CORNER GUARD
CHBD	CHALKBOARD
CHFR	CHAMFER
CI	CAST IRON
CIR	CIRCLE
CIRC	CIRCULAR, CIRCUMFERENCE
CJ	CONSTRUCTION JOINT
CL	CHAIN LINK
CLG	CEILING
CLJ	CONTROL JOINT
CLL	CONTRACT LIMIT LINE
CLOS	CLOSURE
CLR	CLEAR(ANCE)
CLRM	CLASSROOM
CMPST	COMPOSITION
CMU	CONCRETE MASONRY UNIT
CNCL	CONCEALED
CNR	CORNER
CNTR	COUNTER
COL	COLUMN
COM	COMMON
COMB	COMBINATION
COMPT	COMPARTMENT
CONC	CONCRETE
CONF	CONFERENCE
CONN	CONNECTION
CONSTR	CONSTRUCTION
CONT	CONTINUOUS (ATION)
CONTR	CONTRACT(OR)
COORD	COORDINATE
CORR	CORRIDOR
CPR	COPPER
CPRS	COMPRESS(ED), (ION), (IBLE)
CPT	CARPET(ED)
CRS	COLD ROLLED STEEL
CS	CAST STONE
CSG	CASING
CSK	COUNTERSUNK
CSMT	CASEMENT
CSWK	CASEWORK
CT	CERAMIC TILE
CTB	CERAMIC TILE BASE
CTF	CERAMIC TILE FLOOR
CTG	COATING
CTR	CENTER

CUFT	CUBIC FOOT
CUIN	CUBIC INCH
CUST	CUSTODIAN
CUYD	CUBIC YARD

D	DRAIN
DA	DOUBLEACTING
DBL	DOUBLE
DEMO	DEMOLISH, DEMOLITION
DEP	DEPRESSED
DEPT	DEPARTMENT
DET	DETAIL
DF	DRINKING FOUNTAIN
DH	DOUBLE HUNG
DIA	DIAMETER
DIAG	DIAGONAL
DIFF	DIFFUSER
DIM	DIMENSION
DISP	DISPENSER
DIV	DIVISION
DMPF	DAMPPROOFING
DMT	DEMOUNTABLE
DN	DOWN
DR	DOOR
DRB	DRAINBOARD
DRLV	DOOR LOUVER
DS	DOWNSPOUT
DSP	DRY STANDPIPE
DT	DRAIN TILE
DVTL	DOVETAIL
DW	DISHWASHER
DWG	DRAWING
DWL	DOWEL
DWR	DRAWER

E	EAST
EA	EACH
EAR	EXHAUST AIR REGISTER
EB	EXPANSION BOLT
EE	EACH END
EF	EACH FACE
EFS	EXTERIOR FINISH SYSTEM
EHD	ELECTRIC HAND DRYER
EIFS	EXTERIOR INSULATION AND FINISH SYSTEM
EJ	EXPANSION JOINT
EL	ELEVATION
ELAST	ELASTOMERIC
ELEC	ELECTRIC(AL)
ELEV	ELEVATOR
EM	EXPANDED METAL
EMER	EMER EMERGENCY
EN	EDGE NAILING
ENCL	ENCLOSE(URE)
ENGR	ENGINEER
ENTR	ENTRANCE
EP	ELECTRICAL PANELBOARD
EQ	EQUAL
EQUIP	EQUIPMENT
ESC	ESCUTCHEON
ESCL	ESCALATOR
ESMT	EASEMENT
EW	EACH WAY
EWC	ELECTRIC WATER COOLER
EWH	ELECTRICAL WATER HEATER
EWS	EYE WASH STATION
EXC	EXCAVATE
EXG	EXISTING
EXH	EXHAUST
EXP	EXPOSED
EXPN	EXPANSION
EXS	EXTRA STRONG
EXT	EXTERIOR

F/F	FACE TO FACE
FA	FIRE ALARM
FAB	FABRIC
FBD	FIBERBOARD
FBRK	FIRE BRICK
FCBRK	FACE BRICK
FD	FLOOR DRAIN
FDTN	FOUNDATION
FE	FIRE EXTINGUISHER
FEC	FIRE EXTINGUISHER CABINET
FFA	FROM FLOOR ABOVE
FFB	FROM FLOOR BELOW
FFEL	FINISHED FLOOR ELEVATION
FFL	FINISHED FLOOR LINE
FGL	FIBERGLASS
FHC	FIRE HOSE CABINET
FHMS	FLATHEAD MACHINE SCREW
FHWS	FLATHEAD WOOD SCREW
FIN	FINISH(ED)
FJT	FLUSH JOINT
FLASH	FLASH(ING)
FLDG	FOLDING
FLG	FLOORING
FLR	FLOOR
FLUOR	FLUORESCENT
FN	FIELD NAILING
FOC	FACE OF CONCRETE
FOF	FACE OF FINISH
FOG	FACE OF GRID
FOM	FACE OF MASONRY
FOS	FACE OF STUDS
FPL	FIREPLACE
FPRF	FIREPROOF(ING)
FR	FRAME(D), (ING)
FRG	FIBER REINFORCED GYPSUM
FRGL	FIRE RESISTIVE GLAZING
FRP	FIBERGLASS REINFORCED PLASTIC
FRTD	FIRE RATED
FRTW	FIRE RETARDANT TREATED WOOD
FRZ	FREEZER
FS	FAR SIDE
FSTN	FASTEN, FASTENER
FT	FOOT OR FEET
FTG	FOOTING
FURG	FURRED (ING)
FUT	FUTURE
FWC	FABRIC WALL COVERING

GA	GAGE
GAL	GALLON
GALV	GALVANIZED
GB	GRAB BAR
GFRC	GLASS FIBER REINFORCED CONCRETE
GI	GALVANIZED IRON
GL	GLASS
GLU LAM	GLUE LAMINATED
GLZ	GLAZING
GLZCMU	GLAZED CONCRETE MASONRY UNITS
GND	GROUND
GPC	GYPSUM PLASTER CEILING
GR LN	GRADE LINE
GR BM	GRADE BEAM
GR	GRADE, (ING)
GRBD	GARBAGE DISPOSER
GSB	GYPSUM SHEATHING BOARD
GSS	GALVANIZED STEEL SHEET
GST	GLAZED STRUCTURAL TILE
GT	GROUT
GVL	GRAVEL
GYP	GYPSUM

HB	HOSE BIBB
HC	HOLLOW CORE
HD	HEAVY DUTY
HD JT	HEAD JOINT
HDAS	HEADED ANCHOR STUD
HDR	HEADER
HDW	HARDWARE
HDWD	HARDWOOD
HEX	HEXAGONAL
HGR	HANGER
HLDN	HOLD DOWN
HM	HOLLOW METAL
HMD	HOLLOW METAL DOOR
HMDF	HOLLOW METAL DOOR AND FRAME
HMF	HOLLOW METAL FRAME
HNDRL	HANDRAIL
HORIZ	HORIZONTAL
HPT	HIGH POINT
HR	HOUR
HT	HEIGHT
HTG	HEATING
HVAC	HEATING/VENTILATING/ AIR CONDITIONING
HWH	HOT WATER HEATER

ID	INSIDE DIAMETER
INCL	INCLUDE(D), (ING)
INSTL	INSTALL
INSUL	INSULATE(D), (ION)
INT	INTERIOR
INV	INVERT
IPS	IRON PIPE SIZE

JAN	JANITOR
JST	JOIST
JT	JOINT

KIT	KITCHEN
KO	KNOCKOUT
KPL	KICKPLATE

LAB	LABORATORY
LAD	LADDER
LAM	LAMINATE(D)
LAV	LAVATORY
LBL	LABEL
LBR	LUMBER
LBS	POUND
LCT	LINOLEUM COMPSITE TILE
LDR	LEADER
LG	LENGTH
LH	LEFT HAND
LHR	LEFT HAND REVERSE
LKNT	LOCKNUT
LKR	LOCKER
LKWASH	LOCKWASHER
LLH	LONG LEG HORIZONTAL
LLV	LONG LEG VERTICAL
LMST	LIMESTONE
LNDSCP	LANDSCAPE(D)
LNTL	LINTEL
LP	LIGHTPROOF
LPT	LOW POINT
LT	LIGHT
LTWT	LIGHT WEIGHT
LVL	LEVEL(ER)
LVR	LOUVER
LW	LIGHTWEIGHT CONCRETE
LWIC	LIGHTWEIGHT INSULATING CONCRETE

MAINT	MAINTAIN(ANCE)
MAS	MASONRY
MATL	MATERIAL
MAX	MAXIMUM
MB	MACHINE BOLT
MBR	MEMBER
MC	MEDICINE CABINET
MCB	METAL CORNER BEAD
MDO	MEDIUM DENSITY OVERLAID
MECH	MECHANICAL
MED	MEDIUM
MEMB	MEMBRANE
MEZZ	MEZZANINE
MFD	METAL FLOOR DECKING
MFR	MANUFACTURE(ER)
MH	MANHOLE
MIN	MINIMUM
MIRR	MIRROR
MISC	MISCELLANEOUS
ML	METAL LATH
MLDG	MOLDING
MLWK	MILLWORK
MO	MASONRY OPENING
MOD	MODULE (AR)
MR	MOISTURE RESISTANT
MRB	MARBLE
MRD	METAL ROOF DECKING
MS	MACHINE SCREW
MTD	MOUNTED
MTL	METAL

MTR	MORTAR
MULL	MULLION
MVBL	MOVABLE
MWP	MEMBRANE WATER PROOFING
N	NORTH
NA	NOT APPLICABLE
NAT	NATURAL
NCOMBL	NONCOMBUSTIBLE
NE	NOT EXCEEDING
NF	NEAR FACE
NIC	NOT IN CONTRACT
NLB	NON-LOAD BEARING
NM	NONMETALLIC
NO	NUMBER
NOM	NOMINAL
NR	NOISE REDUCTION
NRC	NOISE REDUCTION COEFFICIENT
NRCA	NATIONAL ROOFING CONTRACTORS ASSOCIATION
NS	NEAR SIDE
NTS	NOT TO SCALE

O/O	OUT TO OUT
OA	OVERALL
OBS	OBSCURE
OC	ON CENTER(S)
OD	OUTSIDE DIAMETER
OFCI	OWNER FURNISHED - CONTRACTOR INSTALLED
OFF	OFFICE
OFOI	OWNER FURNISHED - OWNER INSTALLED
OFS	OUTSIDE FACE OF STUD
OHMS	OVALHEAD MACHINE SCREW
OHWS	OVALHEAD WOOD SCREW
OPH	OPPOSITE HAND
OPNG	OPENING
OPP	OPPOSITE
OPQ	OPAQUE
OPR	OPERABLE
ORD	OVERFLOW ROOF DRAIN
OVFL	OVERFLOW
OVHD	OVERHEAD

PAR	PARALLEL
PAT	PATTERN
PB	PANIC BAR
PBD	PARTICLE BOARD
PC	PORTLAND CEMENT
PCC	PRECAST CONCRETE
PCP	PORTLAND CEMENT PLASTER
PED	PEDESTAL
PERF	PERFORATE(D)
PERIM	PERIMETER
PERP	PERPENDICULAR
PGBD	PEGBOARD
PH	PHASE
PHS	PHILLIPS HEAD SCREW
PI	POINT OF INTERSECTION
PIV	POST INDICATOR VALVE
PL	PROPERTY LINE
PLAM	PLASTIC LAMINATE
PLAS	PLASTER
PLBG	PLUMBING
PLYWD	PLYWOOD
PNEU	PNEUMATIC
PNL	PANEL
PNT	PAINT(ED)
POL	POLISHED
POLY	POLYETHYLENE
PORC	PORCELAIN
PORT	PORTABLE
PR	PAIR
PRCST	PRECAST
PREFAB	PREFABRICATE(D)
PREFIN	PREFINISHED
PREFMD	PREFORMED
PRKG	PARKING
PRML	PREMOLDED
PROJ	PROJECT
PROP	PROPERTY
PSCONC	PRESTRESSED CONCRETE
PT	POINT
PTCONC	POST TENSIONED CONCRETE
PTD	PAPER TOWEL DISPENSER
PTN	PARTITION
PTR	PAPER TOWEL RECEPTOR
PVC	POLYVINYL CHLORIDE
PVG	PAVE(D), (ING)
PVMT	PAVEMENT

QT	QUARRY TILE
QTB	QUARRY TILE BASE
QTF	QUARRY TILE FLOOR
QTR	QUARTER
QTY	QUANTITY

R	RISER
RA	RETURN AIR
RAB	RABBET
RAD	RADIUS
RB	RESILIENT BASE
RBR	RUBBER
RCP	REINFORCED CONCRETE PIPE
RCVR	RECEIVER
RD	ROOF DRAIN
RDGINS	RIGID INSULATION
RDWY	ROADWAY
REBAR	REINFORCING STEEL BARS
REC	RECESSED
RECT	RETANGULAR
REF	REFERENCE
REFL	REFLECT(ED), (IVE), (OR)
REFR	REFRIGERATOR
REG	REGISTER
REINF	REINFORCE(D), (ING), (MENT)
REM	REMOVE(ABLE)
REP	REPAIR
REPL	REPLACE
REQD	REQUIRED
RESIL	RESILIENT
RET	RETURN
REV	REVISION(S), REVISED
RF	RESILIENT FLOORING
RFG	ROOFING
RFH	ROOF HATCH
RH	RIGHT HAND
RHMS	ROUND HEAD MACHINE SCREW
RHR	RIGHT HAND REVERSE
RHWS	ROUND HEAD WOOD SCREW
RL	ROOF LEADER
RLG	RAILING
RM	ROOM
RND	ROUND
RO	ROUGH OPENING
ROW	RIGHT OF WAY
RS	ROUGH SAWN
RTF	RUBBER TILE FLOORING
RTU	ROOF TOP UNIT
RV	ROOF VENT
RVL	REVEAL
RVS	REVERSE (SIDE)
RVT	RIVET(ED)
RWD	REDWOOD
RWL	RAIN WATER LEADER

S	SOUTH
S2S	SURFACED TWO SIDES
S4S	SURFACED FOUR SIDES
SA	SUPPLY AIR
SALV	SALVAGE
SAT	SUSPENDED ACOUSTICAL TILE
SB	SPLASH BLOCK
SBSTR	SUBSTRATE
SC	SOLID CORE
SCD	SEAT COVER DISPENSER
SCHED	SCHEDULE
SCP	SCUPPER
SCRN	SCREEN
SD	STORM DRAIN
SDBL	SANDBLAST
SECT	SECTION
SGL	SINGLE
SHR	SHOWER
SHT	SHEET(ING)
SHTHG	SHEATHING
SHV	SHELVES (ING)
SIM	SIMILAR
SKLT	SKYLIGHT
SLD	SEALED
SLDG	SLIDE (ING)
SLDR	SOLDER
SLNT	SEALANT
SLV	SLEEVE
SMACNA	SHEET METAL AND AIR CONDITIONING CONTRACTORS NATIONAL ASSOCIATION
SMLS	SEAMLESS
SND	SANITARY NAPKIN DISPENSER
SNDINS	SOUND INSULATION
SNDU	SANITARY NAPKIN DISPOSAL UNIT
SNT	SEALANT
SPC	SUSPENDED PLASTER CEILING
SPD	SOAP DISPENSER
SPEC	SPECIFICATION(S) (ED)
SPRT	SUPPORT
SQ	SQUARE
SSK	SERVICE SINK
SST	STAINLESS STEEL
STA	STATION
STAG	STAGGERED
STC	SOUND TRANSMISSION CLASS
STD	STANDARD
STG	SEATING
STIF	STIFFENER
STIR	STIRRUP
STL	STEEL
STOR	STORAGE
STR	STRAIGHT
ST	STREET
STRCT	STRUCTURAL
STU	STRUCT
SUSP	SUSPENDED
SV	SHEET VINYL
SYMM	SYMMETRICAL
SYNTH	SYNTHETIC
SYS	SYSTEM

T	TREAD
T & B	TOP AND BOTTOM
TB	THRU BOLT
TBE	THREADED BOTH ENDS
TBM	TEMPORARY BENCH MARK
TD	TOWEL DISPENSER
TDR	TOWEL DISPENSER/ RECEPTACLE
TEL	TELEPHONE
TEMP	TEMPORARY
TER	TERRAZZO
TFA	TO FLOOR ABOVE
TFB	TO FLOOR BELOW
T & G	TONGUE & GROOVE
THD	THREAD(ED)
THERM	THERMAL
THK	THICK(NESS)
THRES	THRESHOLD
TKBD	TACKBOARD
TMPD	TEMPERED
TOB	TOP OF BEAM
TOC	TOP OF CURB
TOF	TOP OF FOOTING
TOFF	TOP OF FINISH FLOOR
TOJ	TOP OF JOIST
TOL	TOLERANCE
TOM	TOP OF MASONRY
TOP	TOP OF PARAPET
TOPV	TOP OF PAVEMENT
TOS	TOP OF SHEATHING
TOSL	TOP OF SLAB
TOST	TOP OF STEEL
TOW	TOP OF WALL
TPD	TOILET PAPER DISPENSER
TPTN	TOILET PARTITION
TS	TUBE STEEL
TWLB	TOWEL BAR
TV	TELEVISION
TYP	TYPICAL

UC	UNDERCUT
UGND	UNDERGROUND
UL	UNDERWRITERS LABORATORY
UNFIN	UNFINISHED
UON	UNLESS OTHERWISE NOTED
UR	URINAL
VAR	VARIES
VB	VINYL BASE
VCT	VINYL COMPOSITION TILE
VERT	VERTICAL
VEST	VESTIBULE
VFAT	VINYL FACED ACOUSTIC TILE
VIF	VERIFY IN FIELD
VJ	V-JOINT(ED)
VNR	VENEER
VR	VAPOR RETARDER
VTR	VENT THROUGH ROOF
VWC	VINYL WALL COVERING

W/	WITH
W/W	WALL TO WALL
W/O	WITHOUT
W	WEST
WBL	WOOD BLOCKING
WC	WATER CLOSET
WD	WOOD
WDP	WOOD PANELING
WDW	WINDOW
WF	WIDE FLANGE
WFS	WOOD FURRING STRIP
WGL	WIRED GLASS
WH	WALL HUNG
WI	WROUGHT IRON
WID	WIDTH, WIDE
WLD	WELD(ED)
WM	WIRE MESH
WP	WATERPROOF(ING)
WPT	WORKING POINT
WR	WIRE ROPE
WS	WOOD SCREW
WSCT	WAINSCOT
WT	WEIGHT
WWF	WELDED WIRE FABRIC

XBRACE	CROSS BRACE
XFMR	TRANSFORMER
XSECT	CROSS SECTION

YCO	YARD CLEANOUT
YD	YARD

GOVERNING AGENCIES

DIVISION OF THE STATE ARCHITECT
STRUCTURAL SAFETY SECTION (DSA/SSS)
700 NORTH ALAMEDA STREET, SUITE 5-500
LOS ANGELES, CALIFORNIA 90012
(213) 897-3995

DIVISION OF THE STATE ARCHITECT
FIRE AND LIFE SAFETY SECTION (DSA/FLS)
700 NORTH ALAMEDA STREET, SUITE 5-500
LOS ANGELES, CALIFORNIA 90013
(213) 897-3995

GOVERNING CODES

2016 CALIFORNIA BUILDING STANDARDS ADMINISTRATIVE CODE
CALIFORNIA CODE OF REGULATIONS
(CCR) TITLE 24, PART 1

2016 CALIFORNIA BUILDING CODE (CBC)
CALIFORNIA CODE OF REGULATIONS
(CCR) TITLE 24, PART 2
(2015 INTERNATIONAL BUILDING CODE (IBC) W/ CALIFORNIA AMENDMENTS)

2016 CALIFORNIA ELECTRICAL CODE (CEC)
CALIFORNIA CODE OF REGULATIONS
(CCR) TITLE 24, PART 3
(2014 NATIONAL ELECTRIC CODE (NEC) W/ CALIFORNIA AMENDMENTS)

2016 CALIFORNIA MECHANICAL CODE (CMC)
CALIFORNIA CODE OF REGULATIONS
(CCR) TITLE 24, PART 4
(2015 UNIFORM MECHANICAL CODE (UMC) W/ CALIFORNIA AMENDMENTS)

2016 CALIFORNIA PLUMBING CODE (CPC)
CALIFORNIA CODE OF REGULATIONS
(CCR) TITLE 24, PART 5
(2015 UNIFORM PLUMBING CODE (UPC) W/ CALIFORNIA AMENDMENTS)

2016 CALIFORNIA ENERGY CODE
CALIFORNIA CODE OF REGULATIONS
(CCR) TITLE 24, PART 6

2016 CALIFORNIA HISTORICAL BUILDING CODE
CALIFORNIA CODE OF REGULATIONS
(CCR) TITLE 24, PART 8

2016 CALIFORNIA FIRE CODE (CFC)
CALIFORNIA CODE OF REGULATIONS
(CCR) TITLE 24, PART 9
(2015 INTERNATIONAL FIRE CODE (IFC) W/ CALIFORNIA AMENDMENTS)

2016 CALIFORNIA EXISTING BUILDING CODE
CALIFORNIA CODE OF REGULATIONS
(CCR) TITLE 24, PART 10
(2015 INTERNATIONAL EXISTING BUILDING CODE (IEBC) W/ CALIFORNIA AMENDMENTS)

2016 CALIFORNIA GREEN BUILDING STANDARDS CODE (CAL GREEN)
CALIFORNIA CODE OF REGULATIONS
(CCR) TITLE 24, PART 11

2016 CALIFORNIA REFERENCED STANDARDS CODE -CALIFORNIA CODE OF REGULATIONS
(CCR) TITLE 24, PART 12
1990 STATE FIRE MARSHAL REGULATIONS (AS AMENDED TO DATE) CALIFORNIA CODE OF REGULATIONS (CCR) TITLE 19

CALIFORNIA ELEVATOR SAFETY CODE, CALIFORNIA CODE OF REGULATIONS (CCR) TITLE 8
(AS AMENDED TO DATE)

2010 AMERICANS WITH DISABILITY ACT (ADA) STANDARDS FOR ACCESSIBLE DESIGN (ADAS)

APPLICABLE NFPA , UL AND ICC STANDARDS

NFPA 13	-	AUTOMATIC SPRINKLER SYSTEMS, 2016 EDITION
NFPA 14	-	STANDPIPE SYSTEMS, 2013 EDITION
NFPA 17	-	DRY CHEMICAL EXTINGUISHING SYSTEMS, 2013 EDITION
NFPA 17A	-	WET CHEMICAL SYSTEMS, 2013 EDITION
NFPA 20	-	STATIONARY PUMPS, 2016 EDITION
NFPA 22	-	WATER TANKS FOR PRIVATE FIRE PROTECTION, 2013 EDITION
NFPA 24	-	PRIVATE FIRE MAINS, 2016 EDITION
NFPA 25	-	WATER BASED FIRE PROTECTION SYSTEMS, 2013 EDITION
NFPA 72	-	NATIONAL FIRE ALARM CODE, 2016 EDITION
NFPA 80	-	FIRE DOORS AND OTHER OPENING PROTECTIVES, 2016 EDITION
NFPA 92	-	STANDARD FOR SMOKE CONTROL SYSTEMS, 2015 EDITION
NFPA 253	-	CRITICAL RADIANT FLUX OF FLOOR COVERINGS, 2015 EDITION
NFPA 2001	-	CLEAN AGENT FIRE EXTINGUISHING SYSTEMS, 2015 EDITION
ICC 300	-	ICC STANDARDS FOR BLEACHERS, FOLDING AND TELESCOPIC SEATING, AND GRANDSTANDS, 2012 EDITION
UL 300	-	FIRE TESTING OF FIRE EXTINGUISHING SYSTEMS FOR PROTECTION OF COMMERCIAL RESTAURANT COOKING AREAS, 2005 EDITION
UL 464	-	AUDIBLE SIGNAL APPLIANCES, 2003 EDITION
UL 521	-	HEAT DETECTORS FOR FIRE PROTECTIVE SIGNALING SYSTEMS, 1999 EDITION

NOTE: ALL NFPA STANDARDS AS LISTED ARE TO CONFORM TO THE EDITION AS LISTED WITH THE LATEST CALIFORNIA AMENDMENTS. REFERENCE THE 2016 CBC, TITLE 24, PART 2 - CHAPTER 35 FOR ADDITIONAL APPLICABLE NFPA, UL. STANDARDS AND ANY CALIFORNIA AMENDMENTS TO NFPA STANDARDS.

ARCHITECTS
WLC
CLIENT FOCUSED • PASSION DRIVEN

SOUTHERN CALIFORNIA
8163 ROCHESTER AVENUE, SUITE 100
RANCHO CUCAMONGA
CALIFORNIA 91730-0729

TEL: 909-987-0909
www.wlcarchitects.com

LONGFELLOW ELEMENTARY SCHOOL
HVAC REPLACEMENT
COMPTON UNIFIED SCHOOL DISTRICT
1101 S DWIGHT AVE.
COMPTON, CA 90220

LICENSED ARCHITECT
MARK GRAHAM
C-26046
03-31-19
STATE OF CALIFORNIA

CONSULTANT

IDENTIFICATION STAMP
DSA, OF THE STATE ARCHITECT
OFFICE OF REGULATION SERVICES
APPL 03-118423
AC FLS SS EY
DATE MAR 0 6 2018
FILE: 19-23

NO	DATE	BY	DESCRIPTION
1			REVISIONS

DRAWN:	CHECKED:
DATE: 3/6/2018	SCALE:
PROJECT NUMBER: 1723400	

ARCH DWGS ABBREVIATIONS & GOVERNING CODE

DRAWING NUMBER: A0.2

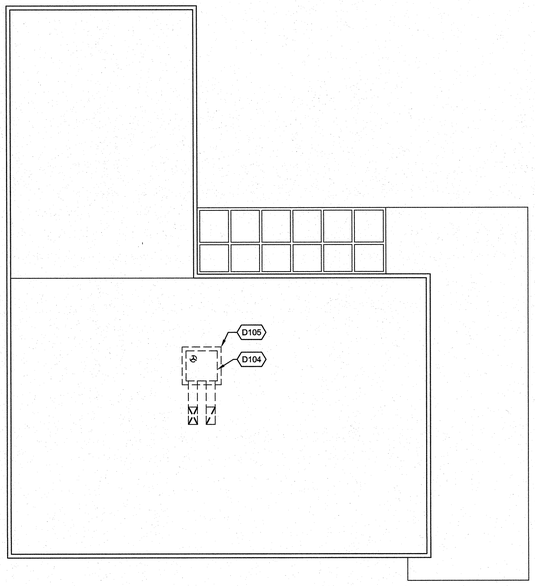

NORTH

BUILDING A - DEMO ROOF PLAN | 1/8" = 1'-0" | 2

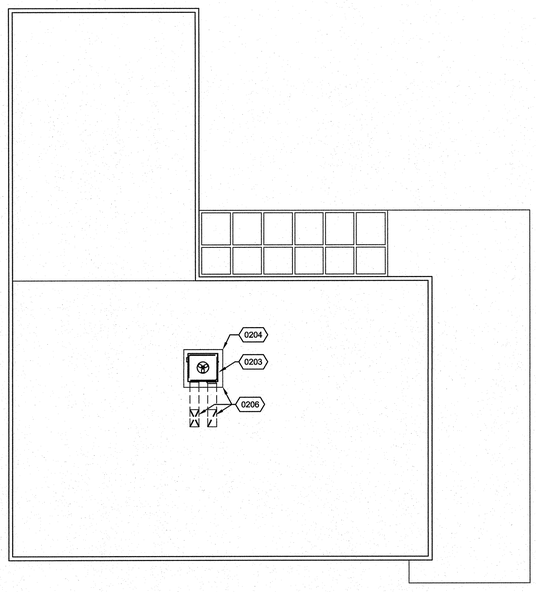

NORTH

BUILDING A - NEW ROOF PLAN | 1/8" = 1'-0" | 3

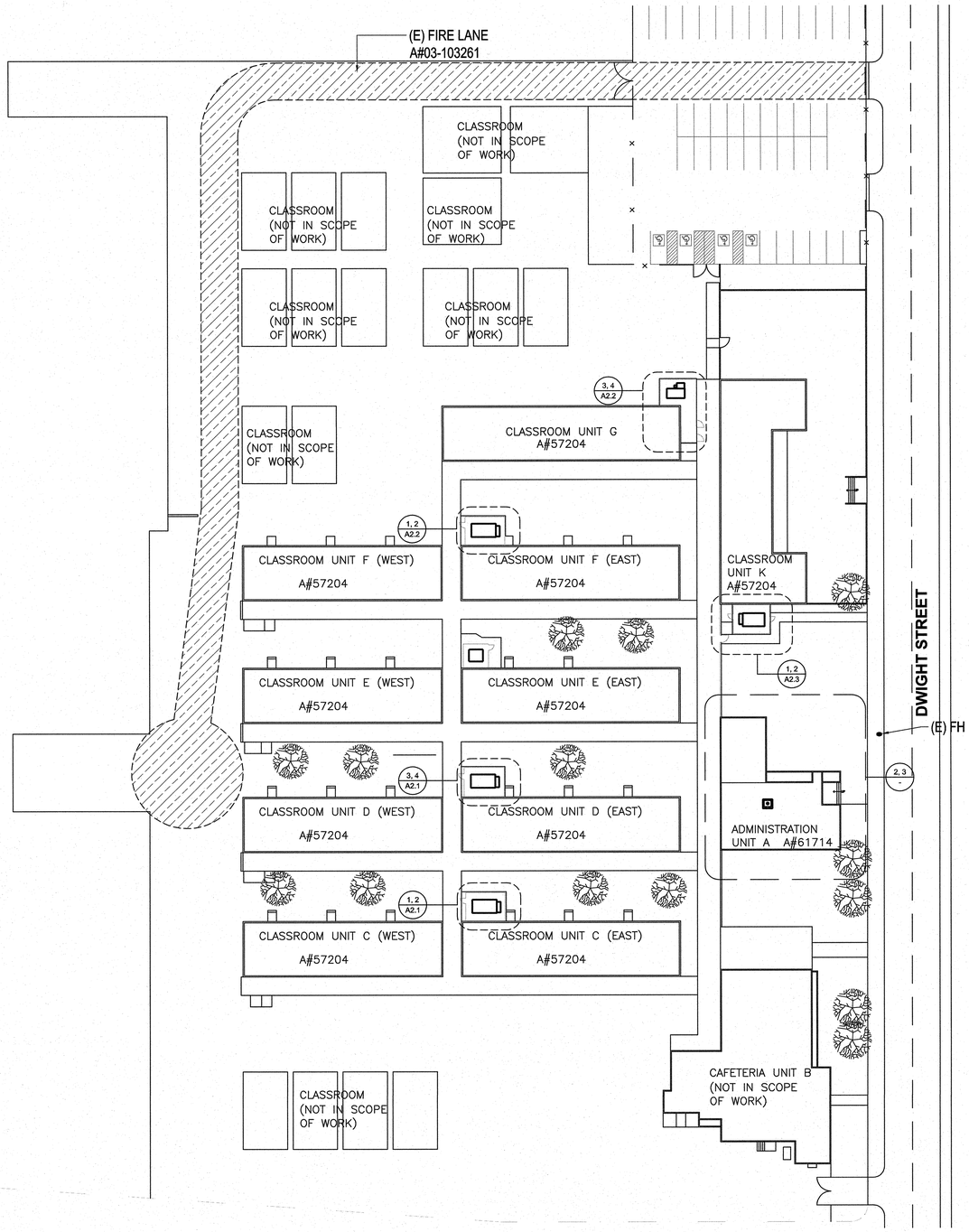

NORTH

SITE PLAN | 1" = 30'-0" | 1

-

D104 (E) HVAC UNIT TO BE REMOVED

D105 REMOVE (E) COUNTER FLASHING

0203 (N) HVAC UNIT, REF TO MECH DWGS.

0204 (N) 20 GA SHEET METAL COUNTER FLASHING, PAINTED

0206 PATCH ROOFING AT ROOF OPENING AND PLATFORM TO MATCH EXISTING ROOFING.

REFERENCE NOTES

BUILDING DATA

BUILDING	OCCU TYPE	CONSTR TYPE	AREA
A	B	TYPE V-B	3,194 SF
C	E	TYPE V-B	7,080 SF
D	E	TYPE V-B	7,080 SF
E	E	TYPE V-B	7,080 SF
F	E	TYPE V-B	7,080 SF
G	E	TYPE V-B	3,840 SF
K	E	TYPE V-B	4,462 SF

WLC ARCHITECTS
CLIENT FOCUSED • PASSION DRIVEN

SOUTHERN CALIFORNIA
8163 ROCHESTER AVENUE, SUITE 100
RANCHO CUCAMONGA
CALIFORNIA 91730-0729

TEL: 909-987-0909

www.wlcarchitects.com

LONGFELLOW ELEMENTARY SCHOOL HVAC REPLACEMENT

COMPTON UNIFIED SCHOOL DISTRICT

1101 S DWIGHT AVE.
COMPTON, CA 90220

LICENSED ARCHITECT
MARK GRAHAM
C-26046
03-31-19
STATE OF CALIFORNIA

CONSULTANT

IDENTIFICATION STAMP
DIV. OF THE STATE ARCHITECT
OFFICE OF REGULATION SERVICES
APPL 03-118423
AC — FLS — SS —
DATE MAR 0 6 2018
FILE: 19-23

NO	DATE	BY	DESCRIPTION
1			REVISIONS

DRAWN: CTW | CHECKED:
DATE: 3/6/2018 | SCALE:
PROJECT NUMBER: 1723400

SITE PLAN AND BUILDING A DEMO & NEW ROOF PLANS

DRAWING NUMBER: A1.0

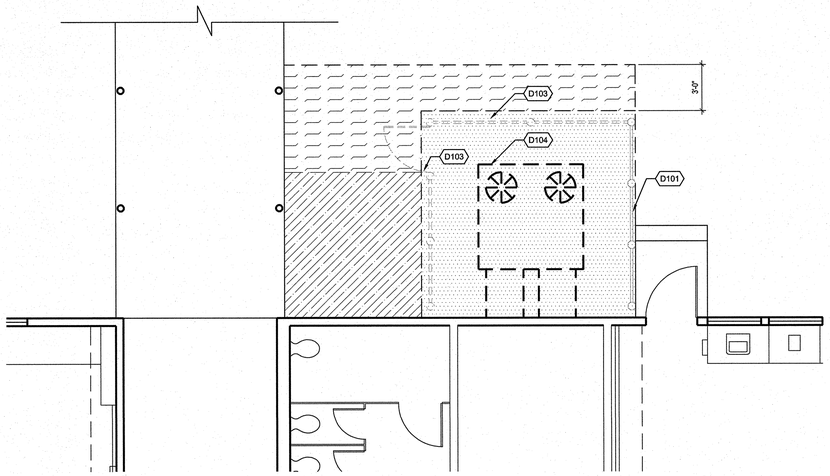

NORTH

BUILDING D - ENLARGED DEMO FLOOR PLAN | 1/4" = 1'-0" | 3

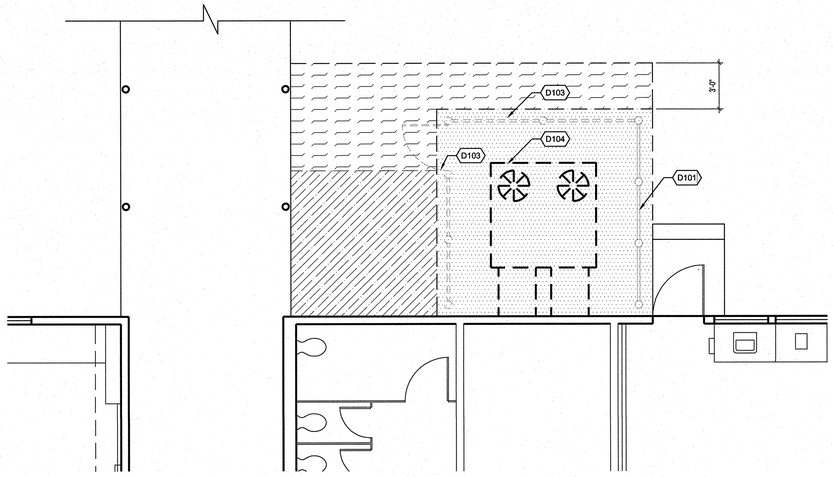

NORTH

BUILDING C - ENLARGED DEMO FLOOR PLAN | 1/4" = 1'-0" | 1

D101 (E) CHAIN LINK FENCE TO REMAIN.

D102 (E) CHAIN LINK GATE TO REMAIN.

D103 (E) CHAIN LINK FENCE, GATE, AND POST TO BE REMOVED AND AND PROTECTED FOR REINSTALLATION, TYP.

D104 (E) HVAC UNIT TO BE REMOVED

0201 RINSTALL (E) CHAIN LINK FENCE/GATE, REF TO DTL 6/A2.3

0202 (N) CHAIN LINK FENCE TO MATCH (E), REF TO DTL 6/A2.3

0203 (N) HVAC UNIT, REF TO MECH DWGS.

0205 (N) DUCT WORK, REF TO MECH DWGS.

REFERENCE NOTES

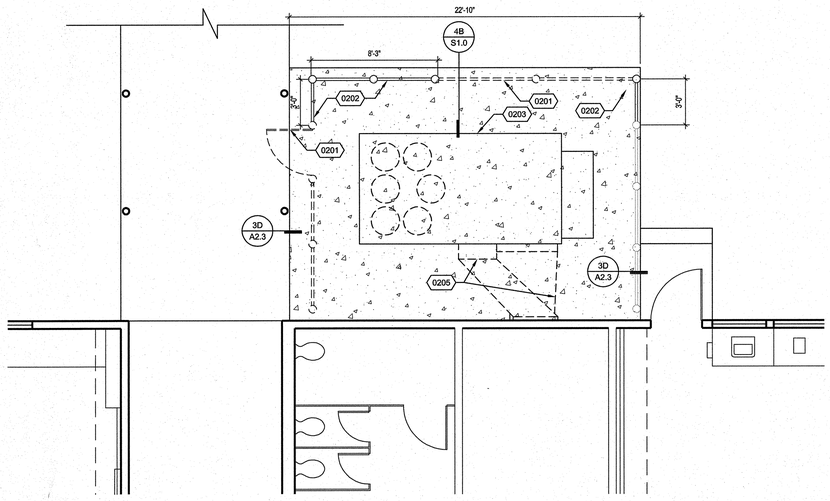

NORTH

BUILDING D - ENLARGED NEW FLOOR PLAN | 1/4" = 1'-0" | 4

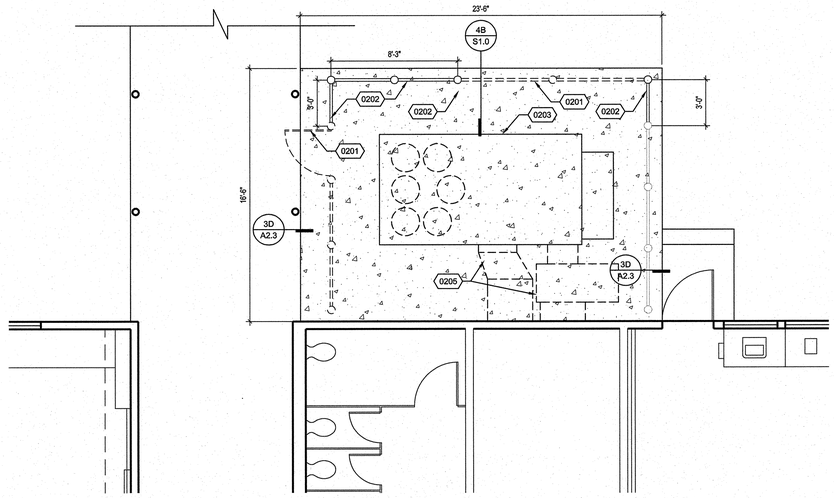

NORTH

BUILDING C - ENLARGED NEW FLOOR PLAN | 1/4" = 1'-0" | 2

DEMOLISH (E) AC PAVING

DEMOLISH (E) CONCRETE PAD

DEMOLISH (E) TURF

(N) CONCRETE PAD, REF TO DTL 3/A2.3

LEGEND

ARCHITECTS
WLC
CLIENT FOCUSED • PASSION DRIVEN

SOUTHERN CALIFORNIA
8163 ROCHESTER AVENUE, SUITE 100
RANCHO CUCAMONGA
CALIFORNIA 91730-0729

TEL: 909-987-0909

www.wlcarchitects.com

LONGFELLOW ELEMENTARY SCHOOL HVAC REPLACEMENT

COMPTON UNIFIED SCHOOL DISTRICT

1101 S DWIGHT AVE.
COMPTON, CA 90220

LICENSED ARCHITECT
MARK GRAHAM
C-26046
03-31-19
STATE OF CALIFORNIA

CONSULTANT

IDENTIFICATION STAMP
DSA / OF THE STATE ARCHITECT
OFFICE OF REGULATION SERVICES
APPL 03-118423
FILE: 19-23
AC — FLS — SS
DATE MAR 07 2018

NO	DATE	BY	DESCRIPTION
1			REVISIONS

DRAWN: CTW	CHECKED:
DATE: 3/6/2018	SCALE:
PROJECT NUMBER: 1723400	

BUILDING C & D ENLARGED DEMO & NEW FLOOR PLANS

DRAWING NUMBER: A2.1

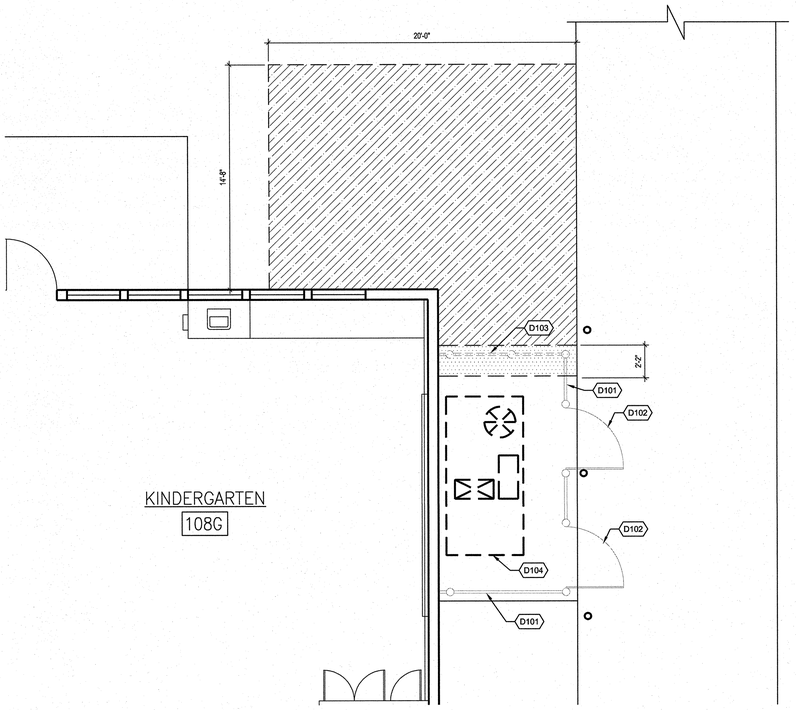

BUILDING G - ENLARGED DEMO FLOOR PLAN | 1/4" = 1'-0" | 3

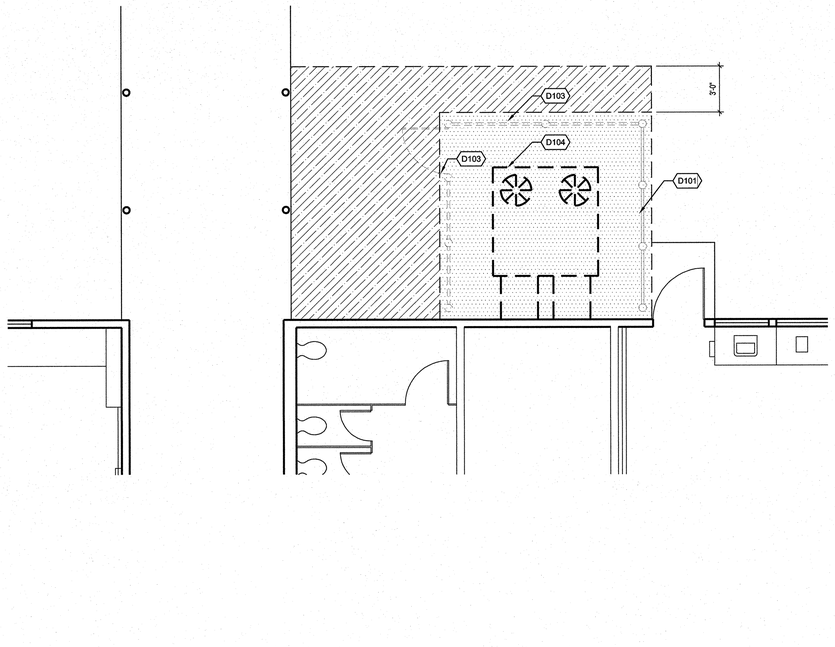

BUILDING F - ENLARGED DEMO FLOOR PLAN | 1/4" = 1'-0" | 1

D101 (E) CHAIN LINK FENCE TO REMAIN.

D102 (E) CHAIN LINK GATE TO REMAIN.

D103 (E) CHAIN LINK FENCE, GATE, AND POST TO BE REMOVED AND AND PROTECTED FOR REINSTALLATION, TYP.

D104 (E) HVAC UNIT TO BE REMOVED

0201 RINSTALL (E) CHAIN LINK FENCE/GATE, REF TO DTL 6/A2.3

0202 (N) CHAIN LINK FENCE TO MATCH (E), REF TO DTL 6/A2.3

0203 (N) HVAC UNIT, REF TO MECH DWGS.

0204 (N) CHAIN LINK FENCE GATE TO MATCH (E), REF TO DTL 7/A2.3

0205 (N) DUCT WORK, REF TO MECH DWGS.

REFERENCE NOTES

DEMOLISH (E) AC PAVING

DEMOLISH (E) CONCRETE PAD

DEMOLISH (E) TURF

(N) CONCRETE PAD, REF TO DTL 3/A2.3

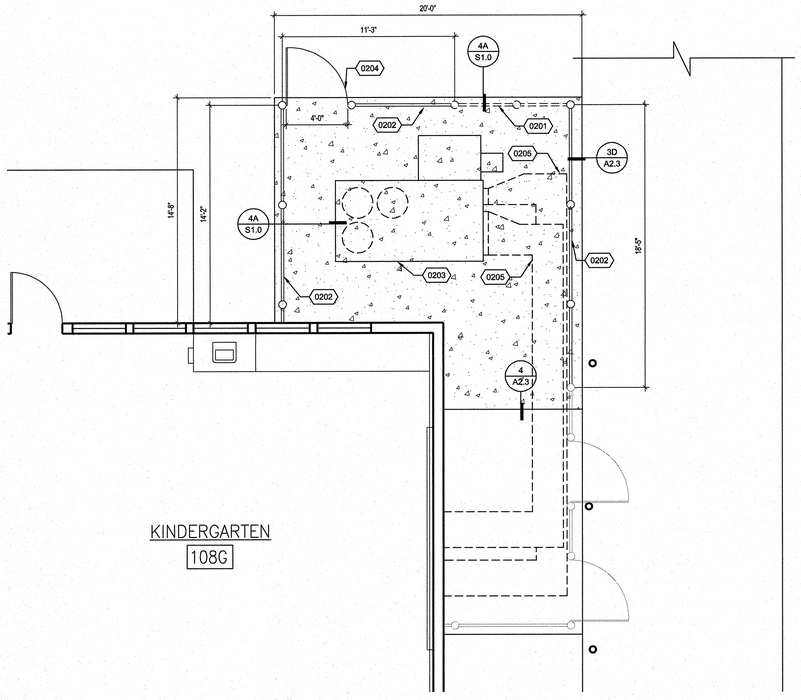

BUILDING G - ENLARGED NEW FLOOR PLAN | 1/4" = 1'-0" | 4

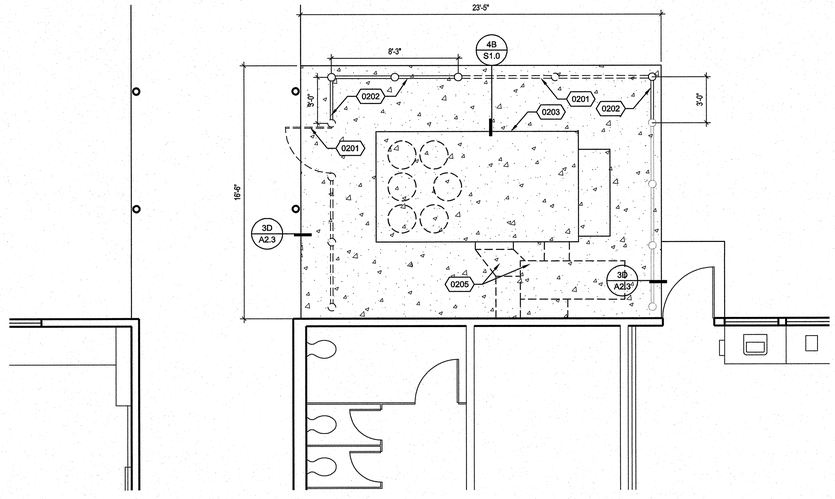

BUILDING F - ENLARGED NEW FLOOR PLAN | 1/4" = 1'-0" | 2

LEGEND

ARCHITECTS
WLC
CLIENT FOCUSED • PASSION DRIVEN

SOUTHERN CALIFORNIA
8163 ROCHESTER AVENUE, SUITE 100
RANCHO CUCAMONGA
CALIFORNIA 91730-0729

TEL: 909-987-0909

www.wlcarchitects.com

LONGFELLOW ELEMENTARY SCHOOL HVAC REPLACEMENT

COMPTON UNIFIED SCHOOL DISTRICT

1101 S DWIGHT AVE.
COMPTON, CA 90220

LICENSED ARCHITECT
MARK GRAHAM
C-28046
03-31-19
STATE OF CALIFORNIA

CONSULTANT

IDENTIFICATION STAMP
DIV. OF THE STATE ARCHITECT
OFFICE OF REGULATION SERVICES
APPL 03-118423
AC FLS SS EV
DATE MAY 0 8 2019
FILE: 19-23

NO	DATE	BY	DESCRIPTION
1			REVISIONS

DRAWN: CTW | CHECKED:
DATE: 3/6/2018 | SCALE:
PROJECT NUMBER: 1723400

BUILDING F & G ENLARGED DEMO & NEW FLOOR PLANS

DRAWING NUMBER: A2.2

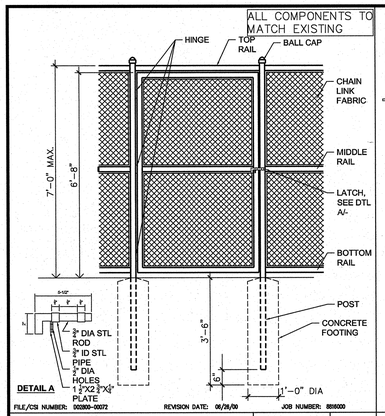

CHAINLINK FENCE GATE | 1/2"=1'-0" | 7

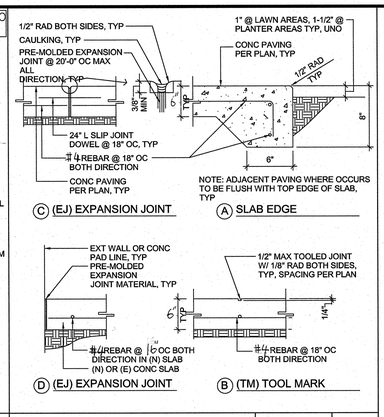

NEW CONC PAVING | 1-1/2" = 1'-0" | 3

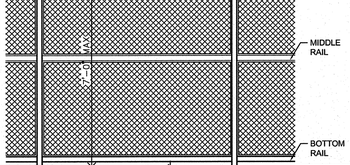

NEW CONC PAVING | 1-1/2" = 1'-0" | 4

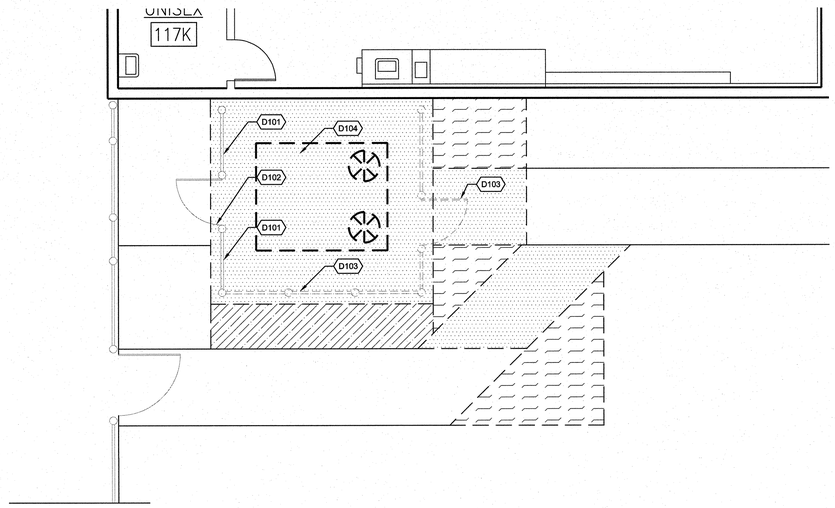

BUILDING K - ENLARGED DEMO FLOOR PLAN | 1/4" = 1'-0" | 1

NORTH

REFERENCE NOTES

- D101 (E) CHAIN LINK FENCE TO REMAIN.
- D102 (E) CHAIN LINK GATE TO REMAIN.
- D103 (E) CHAIN LINK FENCE, GATE, AND POST TO BE REMOVED AND AND PROTECTED FOR REINSTALLATION, TYP.
- D104 (E) HVAC UNIT TO BE REMOVED
- 0201 RINSTALL (E) CHAIN LINK FENCE/GATE, REF TO DTL 6/A2.3
- 0202 (N) CHAIN LINK FENCE TO MATCH (E), REF TO DTL 6/A2.3
- 0203 (N) HVAC UNIT, REF TO MECH DWGS.
- 0205 (N) DUCT WORK, REF TO MECH DWGS.

-	8	NEW CONC PAVING	1-1/2" = 1'-0" | 4

-	9	-	- | 5

-	10	CHAIN LINK FENCE	1/2" = 1'-0" | 6

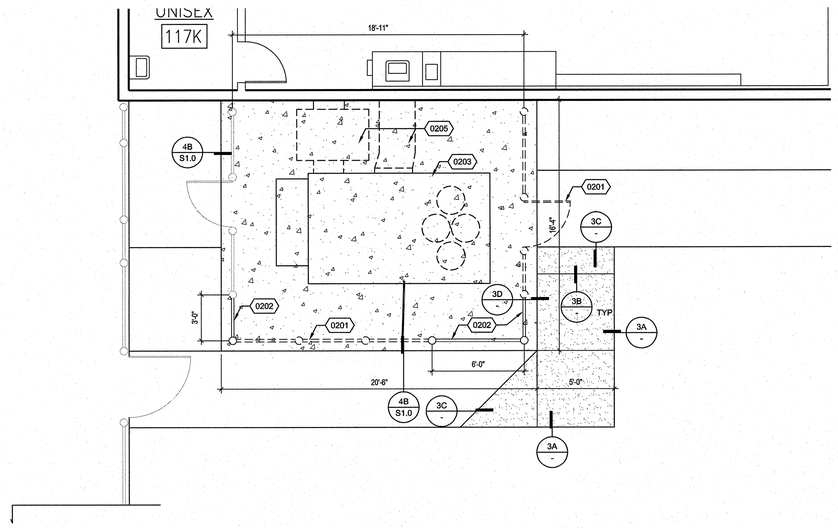

BUILDING K - ENLARGED NEW FLOOR PLAN | 1/4" = 1'-0" | 2

NORTH

LEGEND

- DEMOLISH (E) AC PAVING
- DEMOLISH (E) CONCRETE PAD
- DEMOLISH (E) TURF
- (N) CONCRETE PAD, REF TO DTL 3/A2.3
- (N) CONCRETE PAVING, REF TO DTL 3 & 4/A2.3

ARCHITECTS WLC
CLIENT FOCUSED • PASSION DRIVEN

SOUTHERN CALIFORNIA
8163 ROCHESTER AVENUE, SUITE 100
RANCHO CUCAMONGA
CALIFORNIA 91730-0729
TEL: 909-987-0909
www.wlcarchitects.com

LONGFELLOW ELEMENTARY SCHOOL HVAC REPLACEMENT

COMPTON UNIFIED SCHOOL DISTRICT
1101 S DWIGHT AVE.
COMPTON, CA 90220

LICENSED ARCHITECT MARK GRAHAM C-26046 03-31-19 STATE OF CALIFORNIA

CONSULTANT

IDENTIFICATION STAMP DIV. OF THE STATE ARCHITECT OFFICE OF REGULATION SERVICES
FILE: 19-23
APPL 03-118423
AC FLS SS
DATE MAR 06 2018

NO	DATE	BY	DESCRIPTION
1			REVISIONS

DRAWN: CTW	CHECKED:
DATE: 3/6/2018	SCALE:
PROJECT NUMBER: 1723400	

BLDG K ENLARGED DEMO & NEW FLOOR PLANS AND DETAILS

DRAWING NUMBER: A2.3

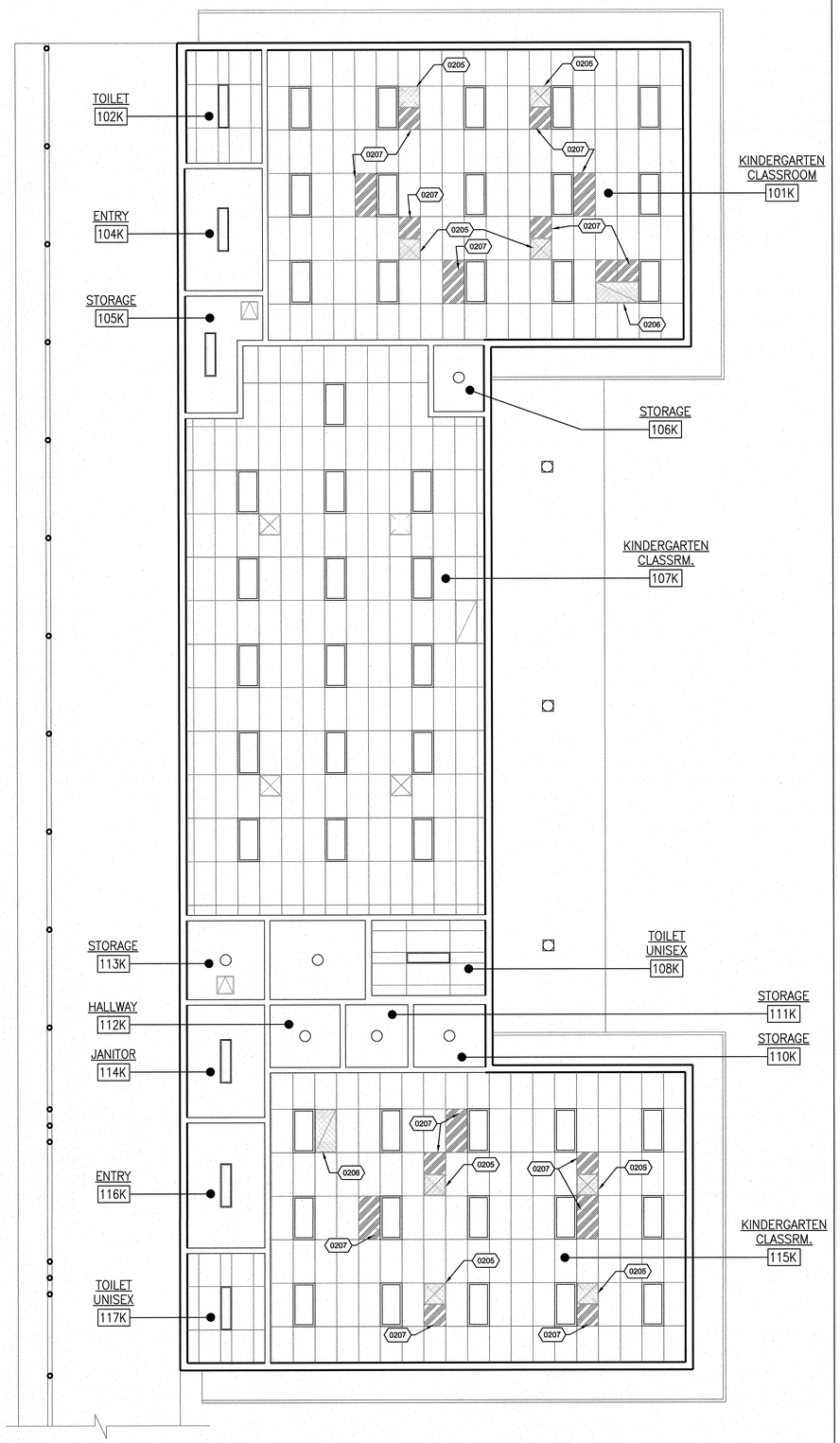

BUILDING K - ENLARGED NEW REFLECTED CEILING PLAN | 3/16" = 1'-0" | 2

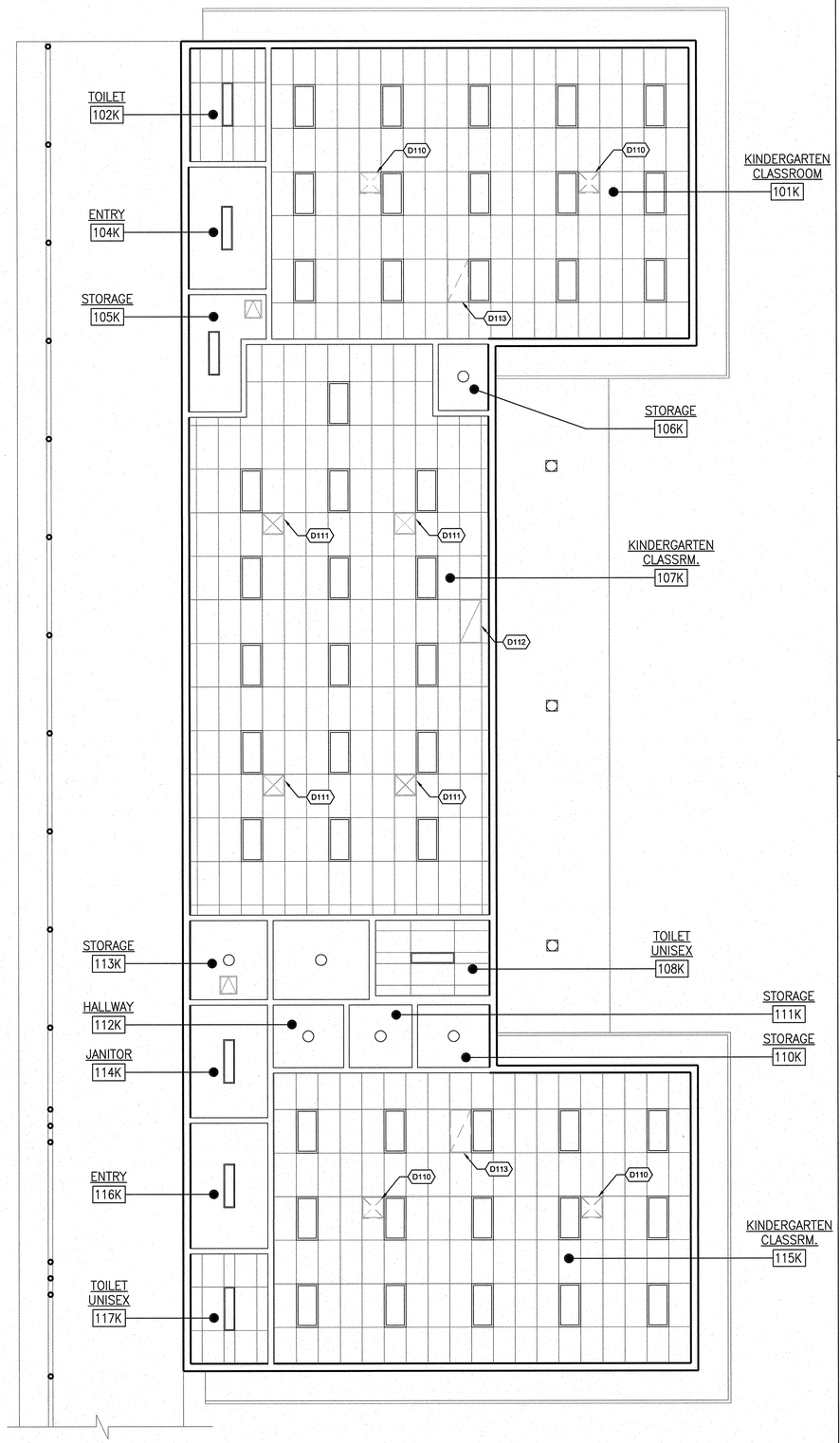

BUILDING K - ENLARGED DEMO REFLECTED CEILING PLAN | 3/16" = 1'-0" | 1

D110 (E) SUPPLY AIR DIFFUSER TO BE REMOVED
D111 (E) SUPPLY AIR DIFFUSER TO REMAIN
D112 (E) RETURN GRILL TO REMAIN
D113 (E) RETURN GRILL TO BE REMOVED
0205 (N) SUPPLY AIR DIFFUSER, REF TO MECH DWGS
0206 (N) RETURN AIR GRILLE, REF TO MECH DWGS
0207 (N) CEILING TILE TO MATCH EXISTING AND MODIFY THE CEILING GRILL TO FIT THE (N) DIFFUSER OR GRILLE

REFERENCE NOTES

1. IT IS THE MECHANICAL CONTRACTOR'S RESPONSE TO MODIFIED THE EXISTING CEILING GRILL AND CEILING TILE TO FIT THE NEW SUPPLY DIFFUSER AND RETURN GRILLE, AND PROVIDE THE NEW CEILING TILE FOR THE REMAIN EXISTING OPENING.

GENERAL NOTES

WLC ARCHITECTS
CLIENT FOCUSED • PASSION DRIVEN
SOUTHERN CALIFORNIA
8163 ROCHESTER AVENUE, SUITE 100
RANCHO CUCAMONGA
CALIFORNIA 91730-0729
TEL: 909-987-0909
www.wlcarchitects.com

LONGFELLOW ELEMENTARY SCHOOL
HVAC REPLACEMENT
COMPTON UNIFIED SCHOOL DISTRICT
1101 S DWIGHT AVE.
COMPTON, CA 90220

LICENSED ARCHITECT
MARK GRAHAM
C-26046
03-31-19
STATE OF CALIFORNIA

CONSULTANT

IDENTIFICATION STAMP
DIV. OF THE STATE ARCHITECT
OFFICE OF REGULATION SERVICES
APPL 03-118423
FILE: 19-23
AC FLS SS EY
DATE MAR 06 2018

NO	DATE	BY	DESCRIPTION
#	REVISIONS		

DRAWN: CTW	CHECKED:
DATE: 3/6/2018	SCALE:
PROJECT NUMBER: 1723400	

BUILDING K ENLARGED DEMO & NEW REFEL CEILING PLANS

DRAWING NUMBER: A3.1

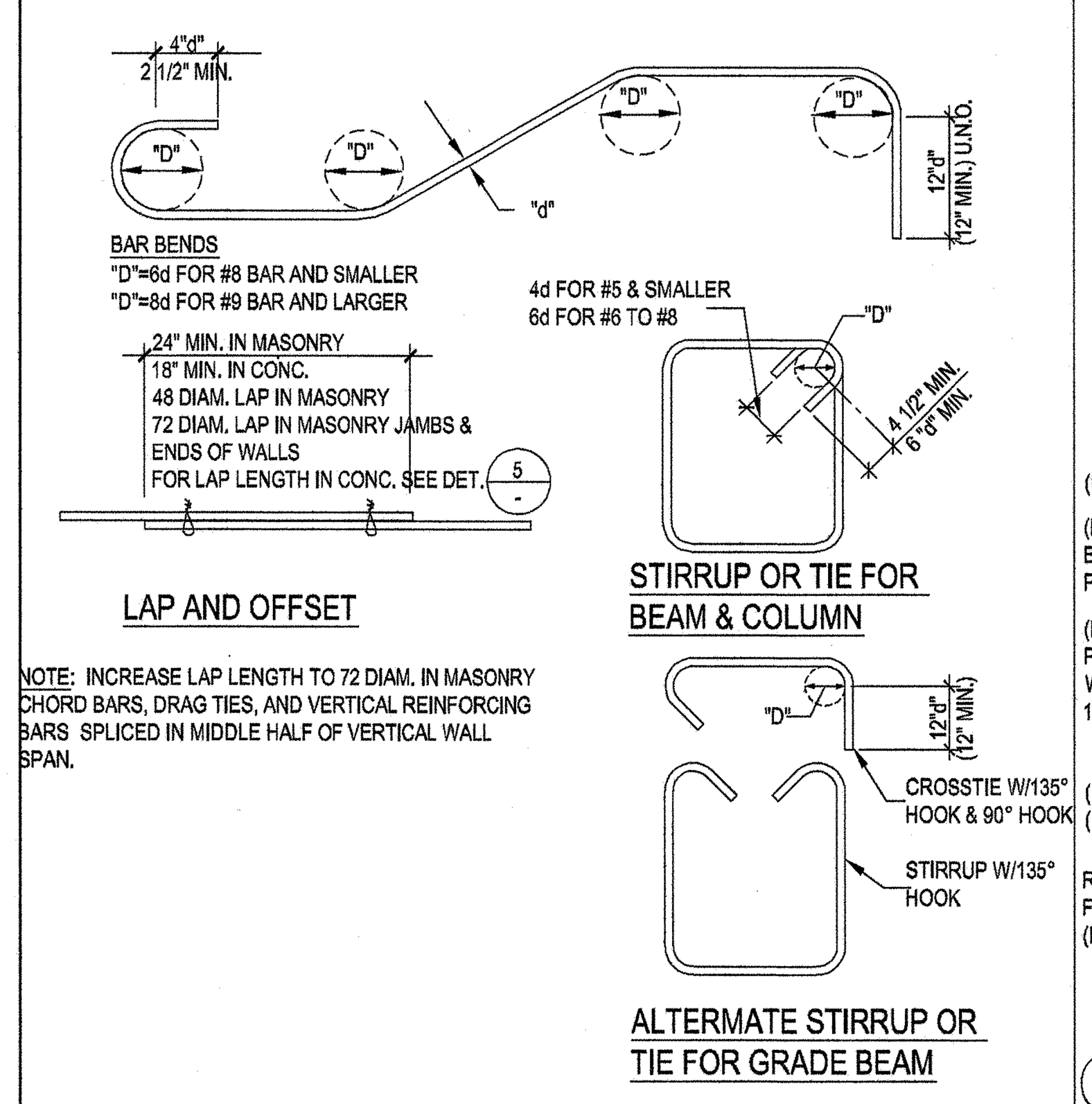

REINFORCING HOOKS AND BENDS | 3/4"=1'-0" | 1

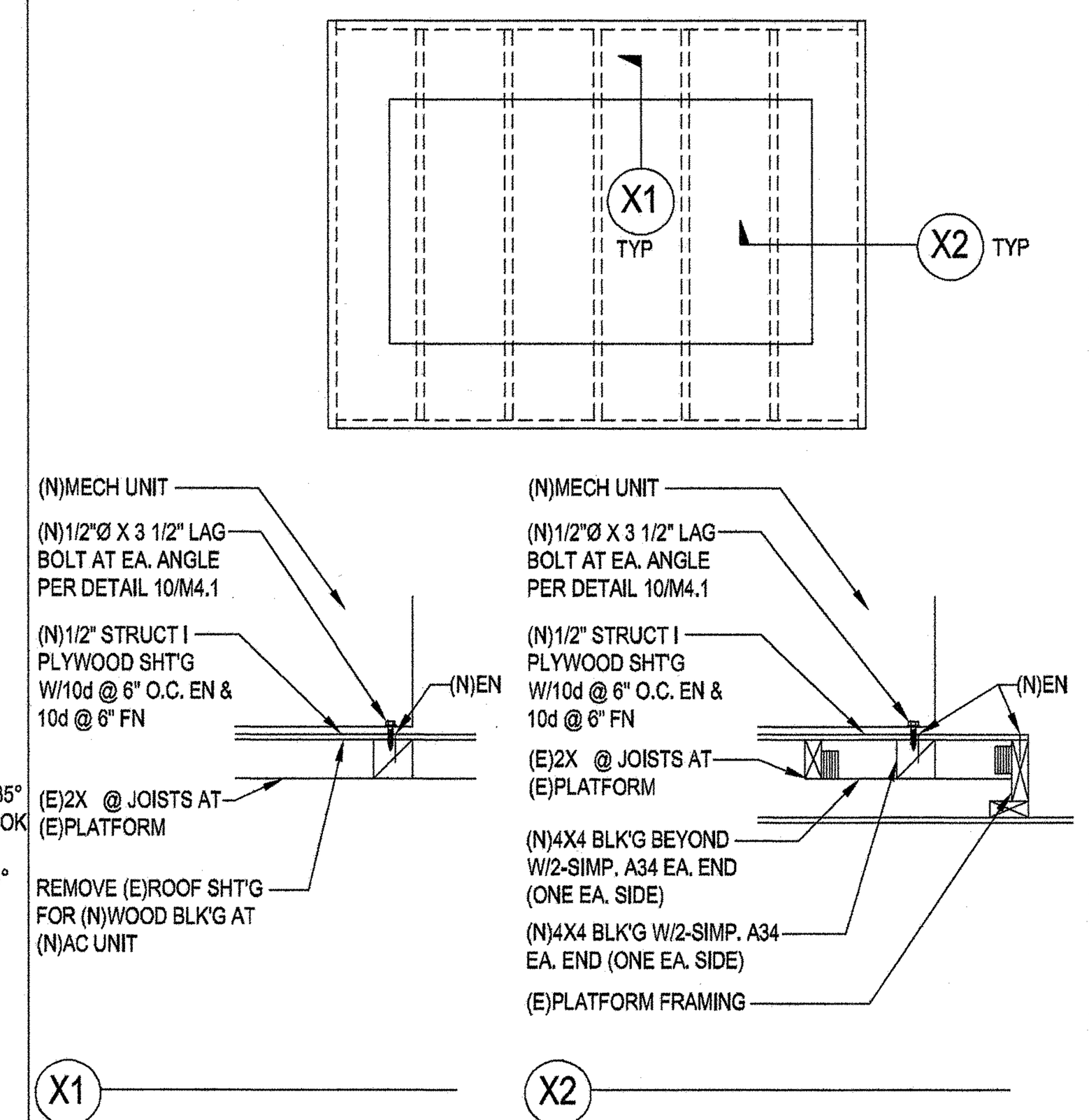

MECH'L PLATFORM | 3/4"=1'-0" | 2

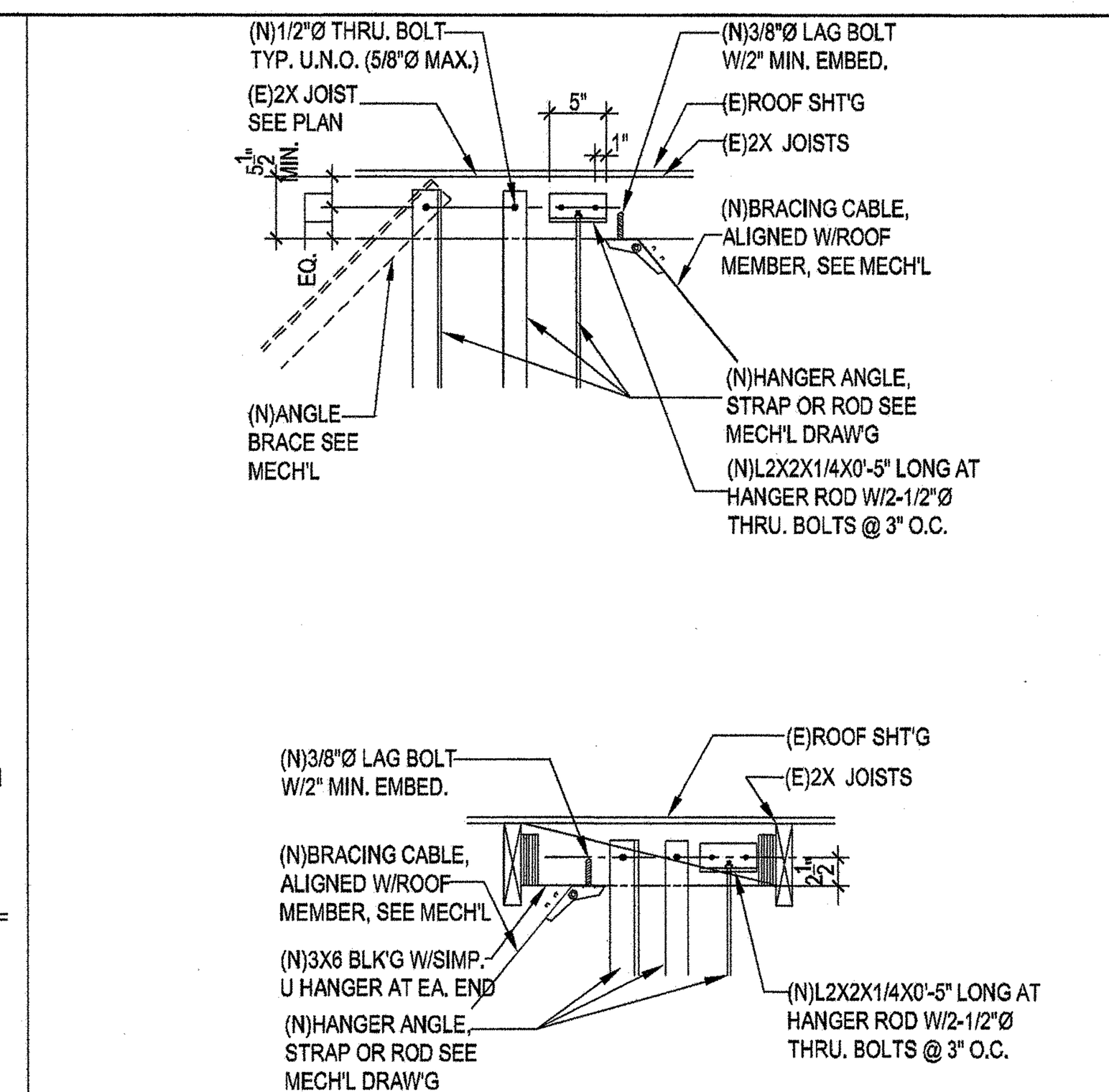

HANGER ANGLE, ROD OR STRAP & BRACE TO (E)ROOF STRUCTURE | 3/4"=1'-0" | 3

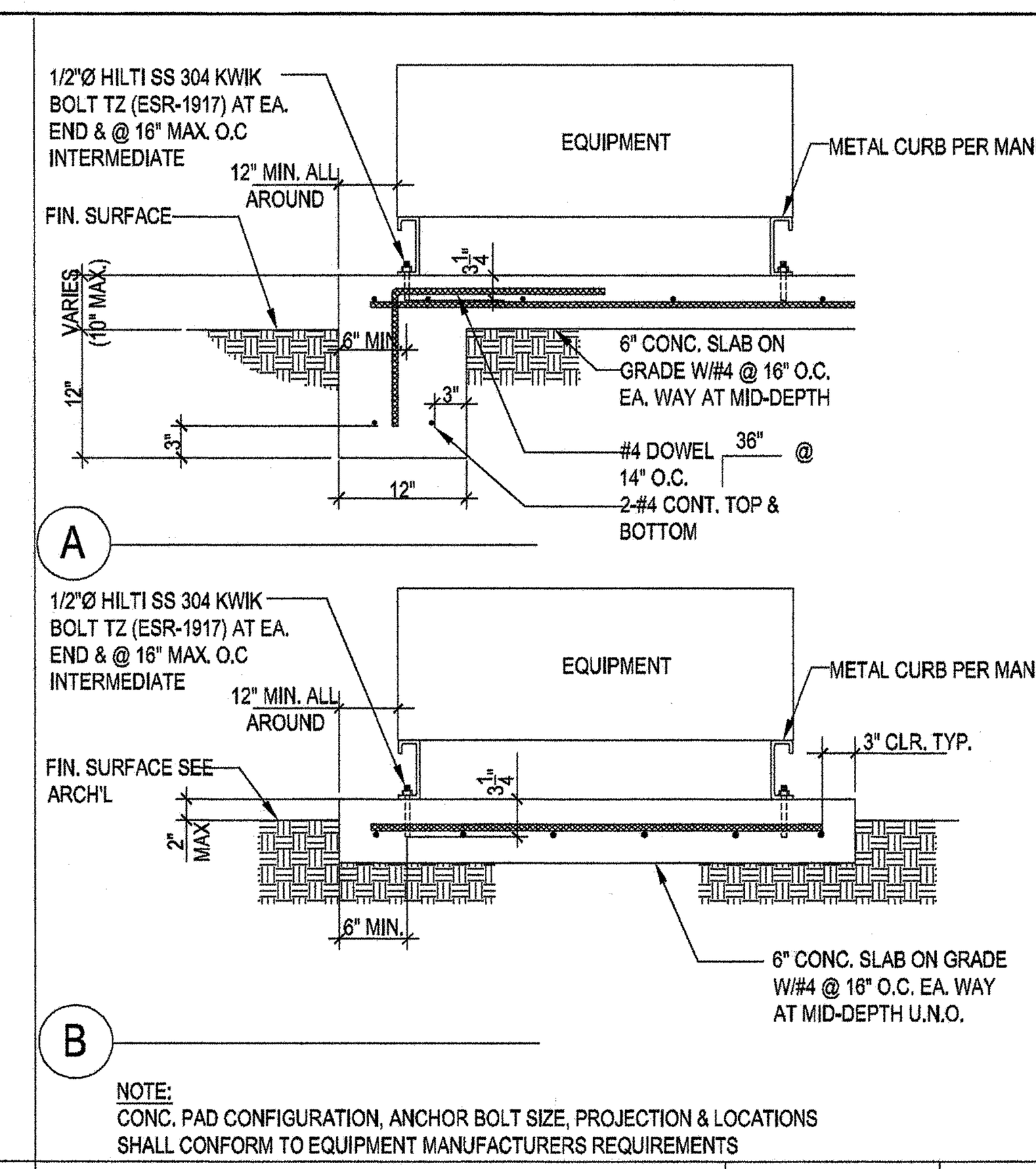

HOUSE KEEPING OR EQUIPMENT PAD | 3/4"=1'-0" | 4

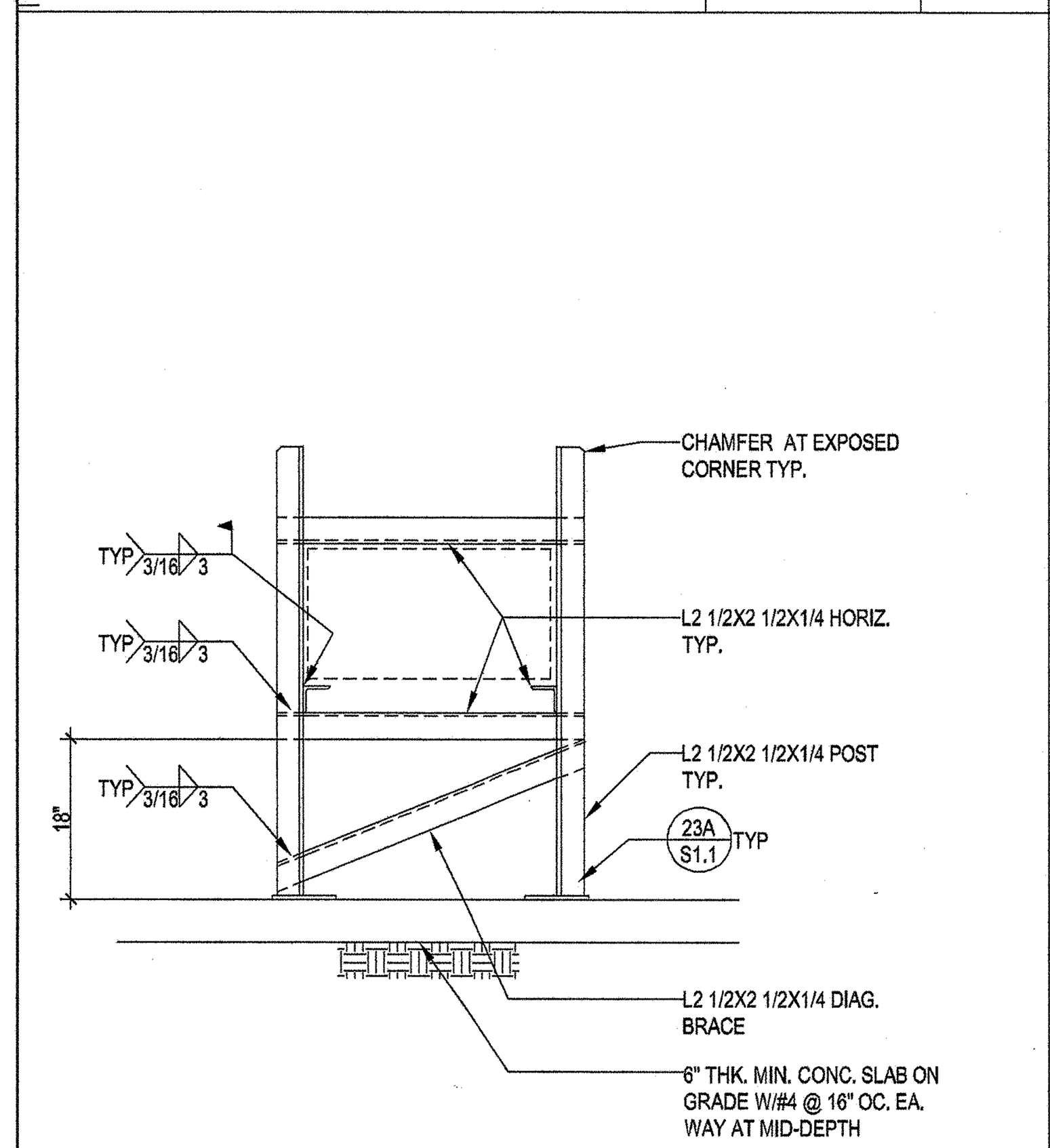

3/4"=1'-0" | 7

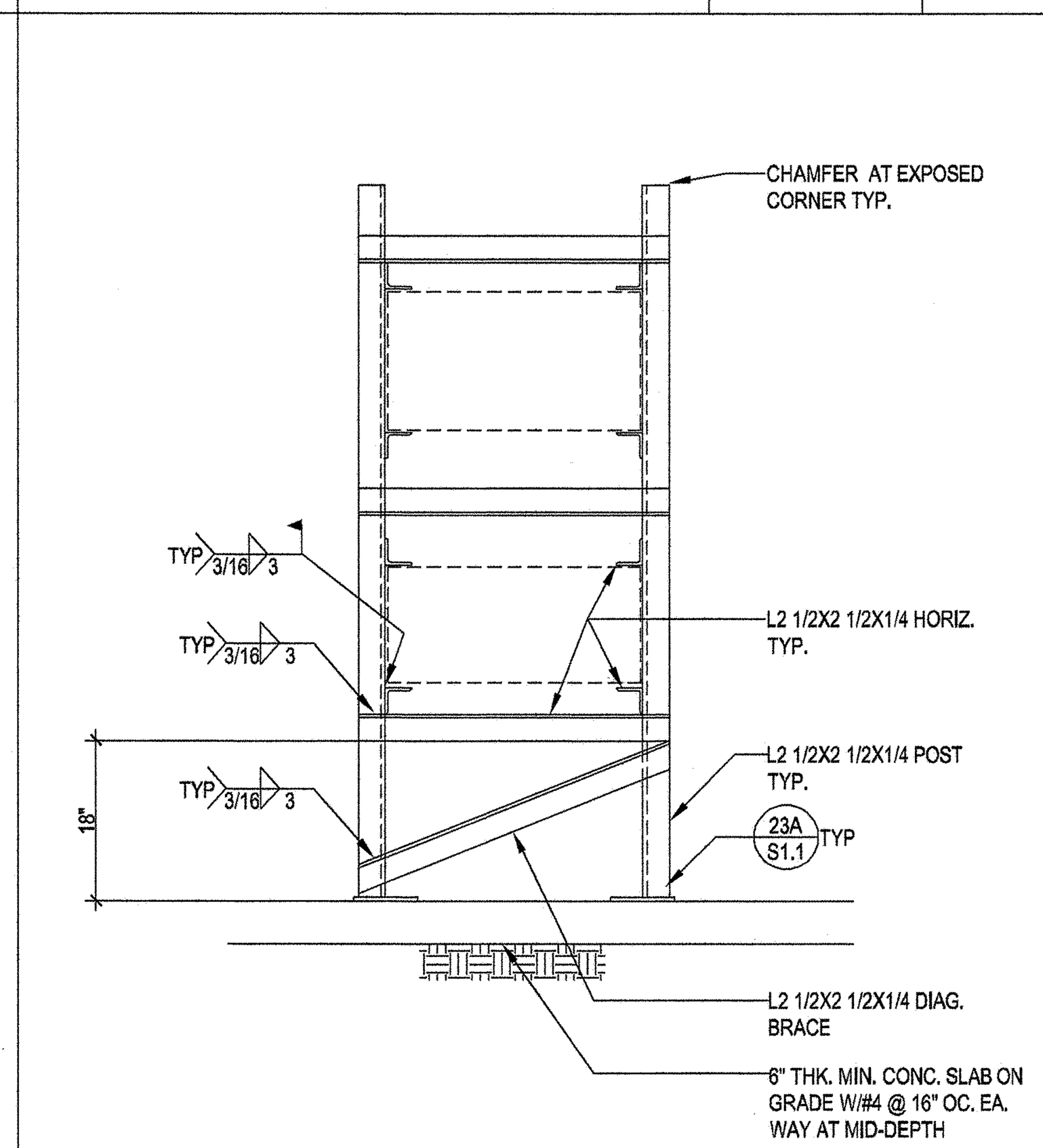

3/4"=1'-0" | 8

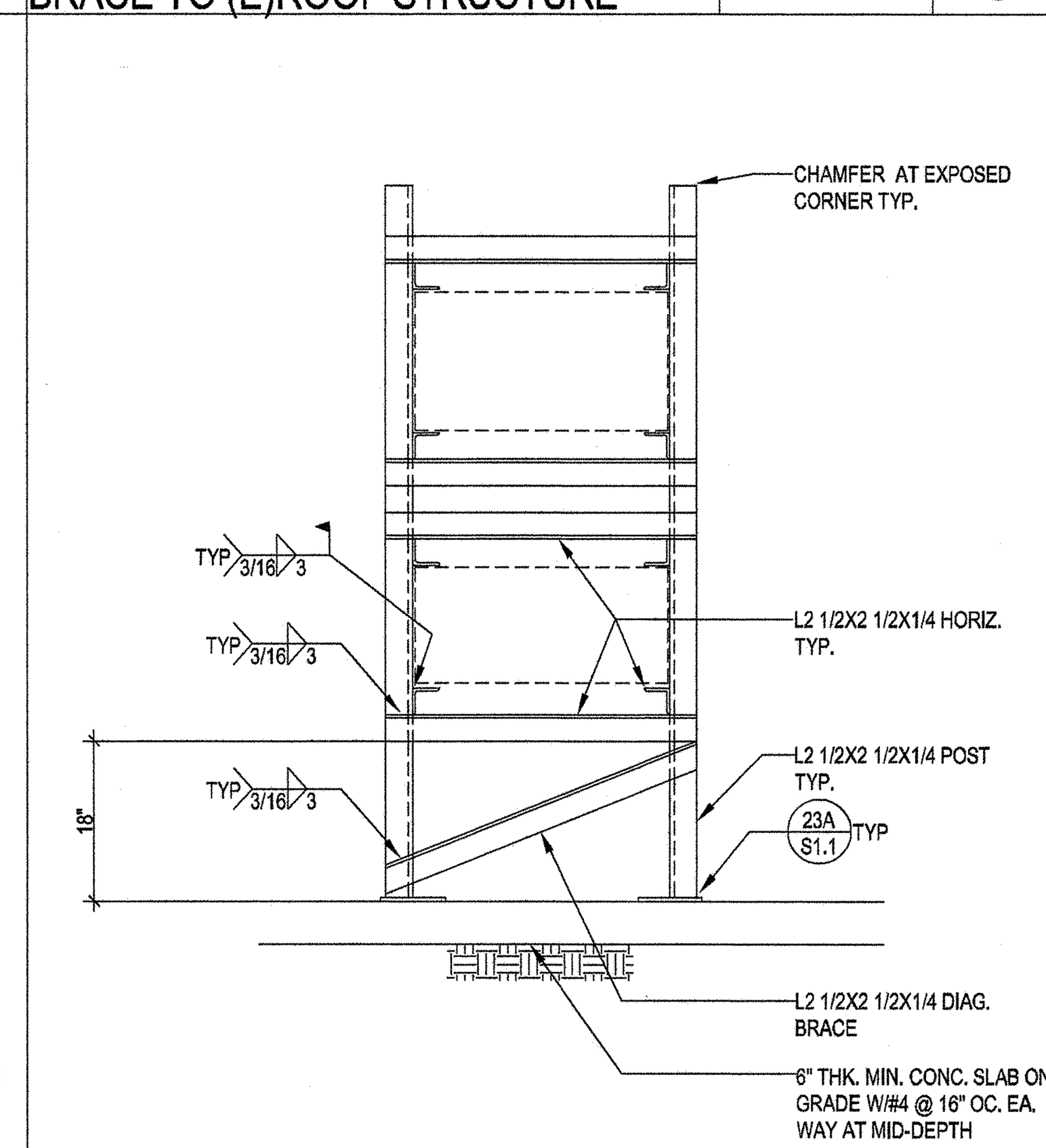

3/4"=1'-0" | 9

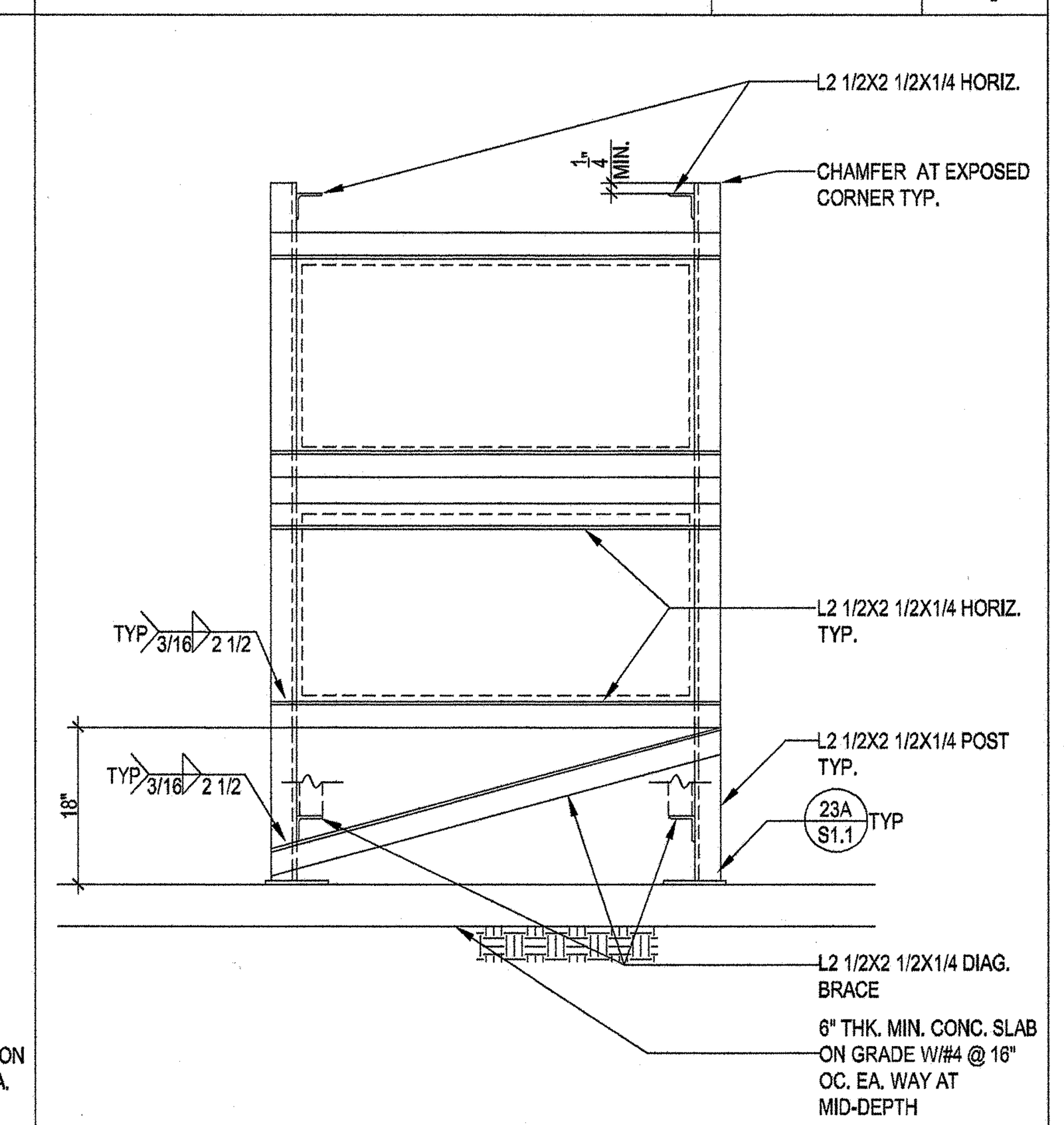

3/4"=1'-0" | 10

LUMBER

1. ALL STRUCTURAL LUMBER SHALL BE GRADED IN ACCORDANCE WITH THE "GRADING AND DRESSING RULES NO. 16 OF THE WEST COAST LUMBERMAN'S ASSOCIATION."
2. ALL WOOD BEARING ON CONCRETE WITHIN 4'-0" FROM GRADE SHALL BE PRESSURE TREATED DOUGLAS FIR.
3. ALL BOLT HOLES SHALL BE DRILLED 1/32" TO 1/16" OVERSIZED (11.1.2.2, '05 NDS)
4. STRUCTURAL MEMBERS SHALL NOT BE CUT FOR PIPES, ETC. UNLESS SPECIFICALLY NOTED OR DETAILED.
5. PROVIDE 2X SOLID BLOCKING BETWEEN JOISTS OR RAFTERS TO ALL SUPPORTS.
6. PROVIDE SOLID BLOCKING OR CROSS-BRIDGING AT 8'-0" O.C. MAXIMUM FOR ALL FLOOR JOISTS OVER (4") DEEP AND AT 10'0" O.C. MAXIMUM FOR ALL RAFTERS OVER (8") DEEP. LOCATE FIRST BLOCK AT MIDSPAN
7. ALL STRUCTURAL PLYWOOD SHALL BE STRUCTURAL GRADE WITH EXTERIOR GLUE CONFORMING TO PS 1-09.
8. IN HORIZONTAL PLYWOOD SHEATHING, NO PANEL SHALL BE LESS THAN 24 INCHES WIDE. IN VERTICAL PLYWOOD SHEATHING, NO PANEL SHALL BE LESS THAN 12 INCHES WIDE.
9. ALL BOLTS BEARING ON WOOD SHALL HAVE STANDARD CUT WASHERS UNDER HEAD AND NUT, UNLESS NOTED OTHERWISE.
10. ALL JOIST HANGERS SHALL BE "SIMPSON" OR APPROVED EQUAL. AND SHALL MATCH SUPPORTED MEMBER SIZE UNLESS OTHERWISE SHOWN ON DRAWINGS. THEY SHALL BE INSTALLED FOR MAXIMUM RATED LOADS.
11. PROVIDE 2X FIRE STOPS AT ALL INTERSECTIONS OF STUD WALLS AND/OR STUD PARTITIONS AT FLOOR, CEILING AND ROOF. FIRE STOPS AT A MAXIMUM SPACING OF 8'0" O.C. IN THE VERTICAL DIRECTION, PROVIDE 2X FIRE STOPS IN ALL FURRED SPACES, VERTICAL AND HORIZONTAL.
12. ALL STRUCTURAL LUMBER SHALL BE DOUGLAS FIR OF THE FOLLOWING GRADES UNLESS OTHERWISE NOTED:
    - STUD, PLATES AND BLOCKING....................NO. 1
    - BEAMS AND STRINGERS....................DENSE NO. 1
    - POSTS AND MULLIONS....................SEL STRUCT
    - JOISTS AND RAFTERS (2X6 AND LARGER)....................NO. 1
    - (2X4 AND 3X4)....................NO. 1
    - BEAMS (LESS THAN 4" IN WIDTH)....................NO. 1
    - PLANK AND DECKING....................SEL COM
    - SILL PLATES....................PRESSURE TREATED NO.1 OR BETTER
13. NAILING FOR 5/8" AND 3/4" PLYWOOD SHALL BE 10d PLYWOOD NAILS, 2-1/2" X #9 GAGE X 9/32" DIAMETER HEAD BARBED SHANK, EQUIVALENT.
14. MACHINE APPLIED NAILING: USE OF MACHINE NAILING IS SUBJECT TO A SATISFACTORY JOBSITE DEMONSTRATION FOR EACH PROJECT AND THE APPROVAL BY THE PROJECT ARCHITECT OR STRUCTURAL ENGINEER AND THE DIVISION OF THE STATE ARCHITECT. THE APPROVAL IS SUBJECT TO CONTINUED SATISFACTORY PERFORMANCE. MACHINE NAILING WILL NOT BE APPROVED IN 5/16" PLYWOOD. IF NAILHEADS PENETRATE THE OUTER PLY MORE THAN WOULD BE NORMAL FOR A HAND HAMMER OR IF MINIMUM ALLOWABLE EDGE DISTANCES ARE NOT MAINTAINED, THE PERFORMANCE WILL BE DEEMED UNSATISFACTORY.
15. ALL NAILS SHALL BE COMMON WIRE NAILS.
16. ALL NAILING SHALL COMPLY WITH TABLE 2304.9.1 OF THE 2013 EDITION OF THE C.B.C.
17. ALL LUMBER SHALL HAVE A MAXIMUM MOISTURE CONTENT OF 19 % (DRY) LUMBER
18. WHERE JOISTS ARE SUPPORTING MECHANICAL EQUIPMENT AND ARCHITECTURAL FEATURES, CONSULT MECHANICAL AND ARCHITECTURAL DRAWINGS FOR EQUIPMENT AND FEATURE LOADS.
19. PREDRILL HOLES AS NEEDED FOR ANY SIZE NAIL TO AVOID SPLITTING WOOD FRAMING MEMBERS.
20. NO SHOT PIN IS ALLOWED AT CURBS & EDGE OF SLABS
21. RETIGHTEN BOLTS BEFORE CLOSING-IN
22. EXTERIOR USE NAILS SHOULD BE CORROSIVE RESISTANCE

GENERAL

1. THE GENERAL CONTRACTOR SHALL VERIFY ALL DIMENSIONS AND SITE CONDITIONS BEFORE STARTING WORK. THE ARCHITECT SHALL BE NOTIFIED OF ANY DISCREPANCY BEFORE PROCEEDING WITH THE WORK.
2. DIMENSIONS SHALL TAKE PRECEDENCE OVER SCALES SHOWN ON DRAWINGS.
3. ALL WORK SHALL CONFORM TO THE MINIMUM STANDARDS OF THE 2013 EDITION OF THE CALIFORNIA BUILDING CODE AND TITLE 24 OF THE CALIFORNIA CODE OF REGULATIONS AND ANY OTHER REGULATIONS OVER ANY PORTION OF THE WORK, INCLUDING THE OCCUPATIONAL SAFETY AND HEALTH ADMINISTRATION, AND THOSE LISTED IN THESE NOTES AND SPECIFICATIONS.
4. SEE ARCHITECTURAL, ELECTRICAL, AND MECHANICAL DRAWINGS FOR PITS, TRENCHES, OPENINGS, DEPRESSIONS, ETC., NOT SHOWN ON THE STRUCTURAL DRAWINGS.
5. THE CONTRACT STRUCTURAL DRAWINGS AND SPECIFICATIONS REPRESENT THE FINISHED STRUCTURE. THEY DO NOT INDICATE THE METHOD OF CONSTRUCTION. THE CONTRACTOR SHALL PROVIDE ALL MEASURES NECESSARY TO PROTECT THE STRUCTURE DURING CONSTRUCTION. SUCH MEASURES SHALL INCLUDE, BUT NOT BE LIMITED TO BRACING, SHORING FOR LOADS DUE TO CONSTRUCTION EQUIPMENT, ETC. OBSERVATION VISITS TO THE SITE BY THE STRUCTURAL ENGINEER SHALL NOT INCLUDE THE INSPECTION OF THE ABOVE ITEMS.
6. CONTRACTOR SHALL INVESTIGATE SITE DURING CLEARING AND EARTHWORK OPERATIONS FOR FILLED EXCAVATIONS OR BURIED STRUCTURES SUCH AS CESSPOOLS, CISTERNS, FOUNDATIONS, ETC. IF ANY SUCH STRUCTURES ARE FOUND, STRUCTURAL AND GEOTECHNICAL ENGINEER SHALL BE NOTIFIED IMMEDIATELY.
7. CONSTRUCTION MATERIALS SHALL BE SPREAD OUT IF PLACED ON FRAMED FLOORS OR ROOF. LOAD SHALL NOT EXCEED THE DESIGN LIVE LOAD PER SQUARE FOOT. PROVIDE ADEQUATE SHORING AND OR BRACING WHERE STRUCTURE HAS NOT ATTAINED DESIGN STRENGTH.
8. DESIGN LOADS:

WIND DESIGN CRITERIA:
WIND SPEED.....Vult =110 mph (3S GUST)
EXPOSURE C
RISK CATEGORY : II
GCpi + 0.18

SEISMIC DESIGN:
RISK CATEGORY = II
Ie=1.00
S_S=1.675, S_1=0.615
SITE CLASS D
S_{DS}=1.116, S_{D1}=0.615
S_{MS}=1.675, S_{M1}= 0.923
SEISMIC DESIGN CATEGORY= D
ANALYSIS PROCEDURE = EQUIVALENT LATERAL FORCE PROCEDURE

CONCRETE

1. ALL CONCRETE SHALL CONFORM TO 2013 CBC, PART II (CCR).
2. CEMENT SHALL CONFORM TO A.S.T.M. (C-150) TYPE II/V.
3. ANCHOR BOLTS, DOWELS, INSERTS, ETC. SHALL BE SECURELY TIED IN PLACE PRIOR TO POURING CONCRETE.
4. CONCRETE SHALL BE CURED BY KEEPING CONTINUOUSLY WET FOR 10 DAYS OR BY AN APPROVED CURING COMPOUND.
5. REFER TO ARCHITECTURAL, MECHANICAL, ELECTRICAL AND PLUMBING DRAWINGS FOR MISCELLANEOUS ITEMS TO BE CAST INTO CONCRETE AND FOR FLOOR DEPRESSIONS, PITS, ETC.
6. MINIMUM CONCRETE COMPRESSIVE STRENGTHS AT 28 DAYS (MAX WATER/CEMENT RATIO = .45) WITH SLUMP =4" SHALL BE AS FOLLOWS:
    - FOUNDATION....................3000 PSI (STONE)
    - SLABS ON GRADE....................3000 PSI (STONE)
7. SLABS ON GRADE SHALL BE REINFORCED WITH #3 @ 16" O.C. EACH WAY UNLESS SPECIFICALLY NOTED.
8. ALL CONCRETE SHALL BE NORMAL WEIGHT CONCRETE EXCEPT AS NOTED.
9. CONCRETE PROPORTIONING SHALL BE BASED ON ACI 318-11 SECTION 5.3
10. 15% MAXIMUM FLY ASH MAY BE USE IN THE NORMAL WIEGHT CONCRETE MIX DESIGN. FLY ASH SHALL CONFORM TO ASTM C618 FOR CLASS N OR F.
11. ALL HEADED ANCHOR BOLTS SHALL CONFORM TO A.S.T.M. F1554 GR 36 OR A449 SPECIFICATION. ALL-THREAD RODS IN FOUNDATION SHALL CONFORM TO A.S.T.M. A36 SPECIFICATION.

REINFORCING STEEL

1. BAR REINFORCING SHALL CONFORM TO ASTM A-615 GRADE 60 DEFORMED FOR NO. 5 AND LARGER; NO. 4 AND SMALLER SHALL CONFORM TO GRADE 40.
2. WELDED WIRE FABRIC SHALL CONFORM TO ASTM A-185, FLAT SHEETS. KEEP REINFORCING AT MID-DEPTH OF SLAB-ON-GRADE.
3. DETAILS OF REINFORCEMENT SHALL BE IN ACCORDANCE WITH CHAPTER 7 OF AMERICAN CONCRETE INSTITUTE 315 UNLESS NOTED ON THIS DRAWING OR PER TITLE 24 CCR PART 2.
4. LAP BARS IN CONCRETE CONSTRUCTION SHALL BE IN ACCORDANCE WITH THE SCHEDULE GIVEN IN SHEET S1.0
5. LAPS OF WELDED FABRIC AT SPLICES SHALL NOT BE LESS THAN 8 INCHES.
6. REINFORCING STEEL DETAILING, BENDING AND PLACING SHALL BE IN ACCORDANCE WITH THE CONCRETE REINFORCING STEEL INSTITUTE "MANUAL OF STANDARD PRACTICE", LATEST EDITION.
7. ALL REINFORCING STEEL, ANCHOR BOLTS, DOWELS SHALL BE SECURELY TIED IN PLACE BEFORE PLACING CONCRETE.
8. SUBMIT REINFORCING SHOP DRAWINGS FOR REVIEW BY THE ARCHITECT BEFORE FABRICATION.
9. PROVIDE THE FOLLOWING MINIMUM CLEAR COVER OF CONCRETE OVER REINFORCING STEEL UNLESS OTHERWISE NOTED ON PLAN:
    - ON EARTH SIDE WHEN PLACED AGAINST EARTH..........3"
    - ON EARTH SIDE WHEN FORMED..........2"
    - EXTERIOR WALL STEEL ABOVE GRADE..........2" (1 1/2" FOR #5 & SMALLER)
    - INTERIOR WALL STEEL AND SUPPORTED SLABS..........3/4"
    - TIED COLUMNS (STIRRUPS) ABOVE GRADE..........1-1/2"
    - BEAMS (STIRRUPS) ABOVE GRADE..........1-1/2"
    - WELDED WIRE FABRIC..........CENTER LINE OF SLAB

EXPANSION ANCHORS

EXPANSION ANCHOR SHALL BE OF TYPE HILTI KWIK BOLT TZ (ESR-1917)

TEST VALUES FOR HARDROCK OR LIGHTWEIGHT CONCRETE	
ANCHOR DIAM.	WEDGE ANCHOR TORQUE VALUE
inches	ft-lbs
3/8"Ø	25
1/2"Ø	40
5/8"Ø	60
3/4"Ø	110

NOTES

1. TEST INSTALLED ANCHORS PER SECTION 1916A.7
2. THE FOLLOWING CRITERIA APPLY FOR THE ACCEPTANCE OF INSTALLED ANCHORS:

A. TORQUE WRENCH METHOD: THE APPLICABLE TEST TORQUE MUST BE REACHED WITHIN THE FOLLOWING LIMITS:

I. WEDGE OR SLEEVE TYPE: ONE-HALF (1/2) TURN OF THE NUT.

II. ONE-QUARTER (1/4) TURN OF THE NUT FOR THE 3/8 IN. SLEEVE ANCHOR ONLY.

3. IF THE MANUFACTURER'S RECOMMENDED INSTALLATION TORQUE IS LESS THAN THE TEST TORQUE NOTED IN THE TABLE, THE MANUFACTURER'S RECOMMENDED INSTALLATION TORQUE SHOULD BE USED IN LIEU OF THE TABULATED VALUES.

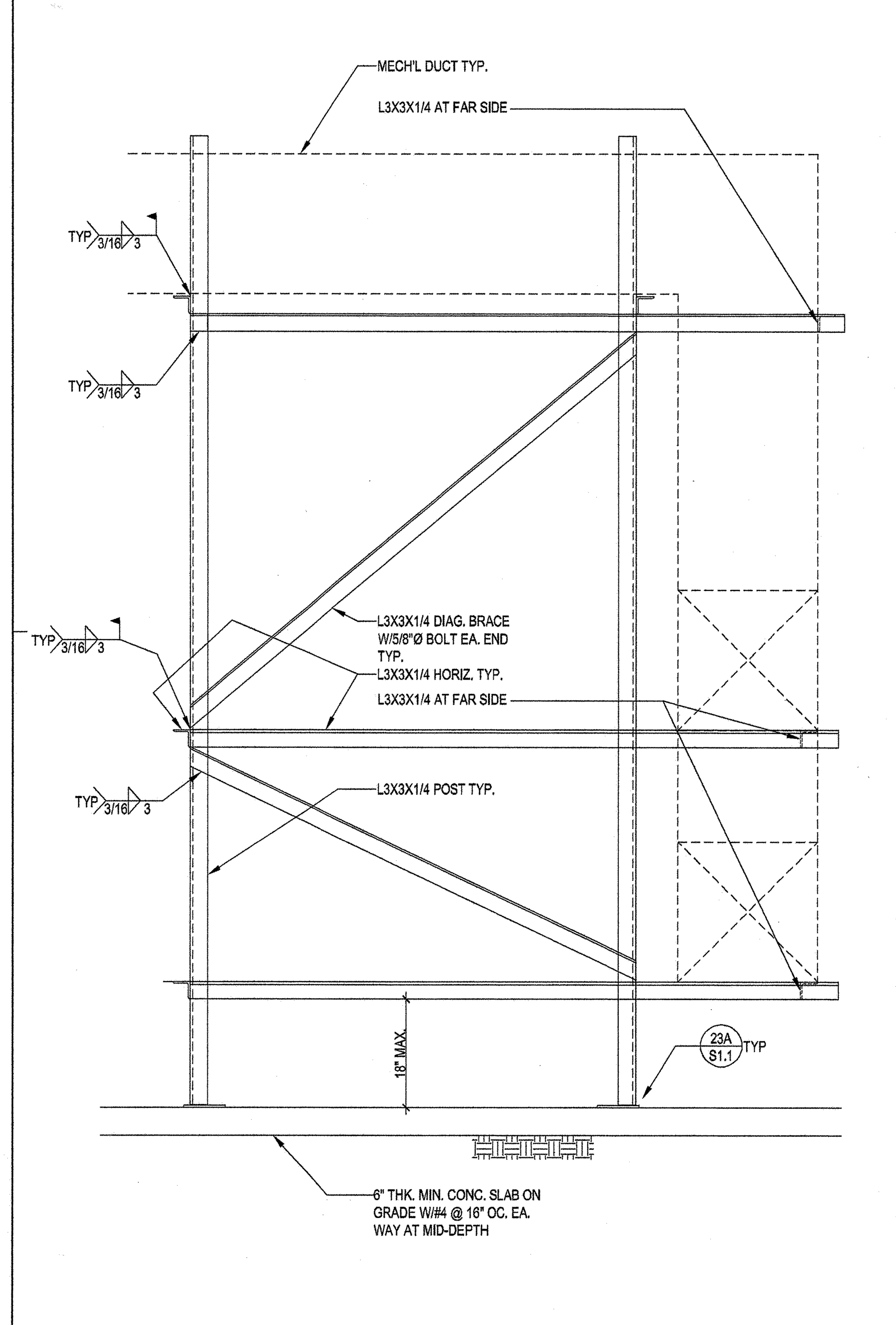

3/4"=1'-0" | 19

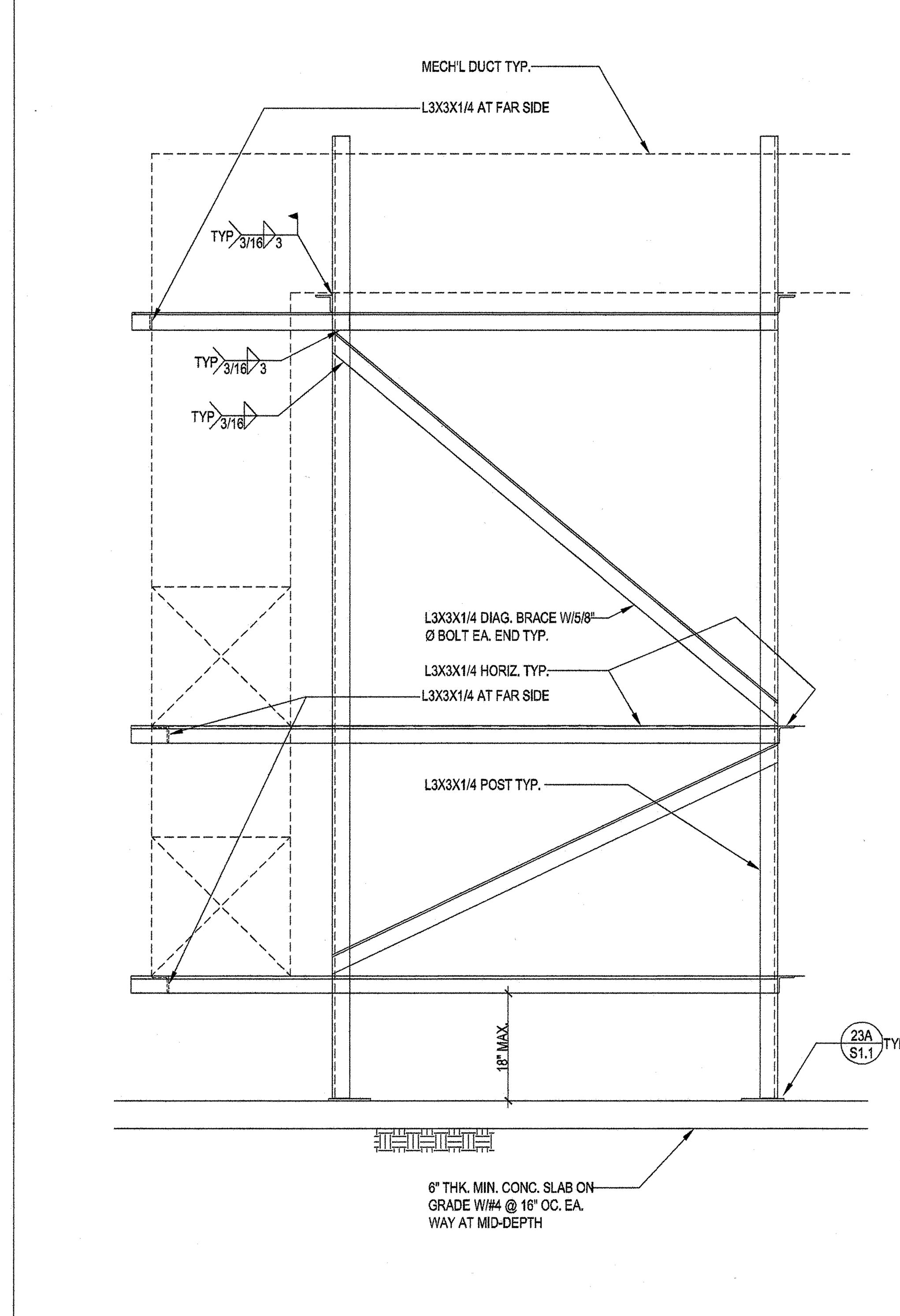

3/4"=1'-0" | 21

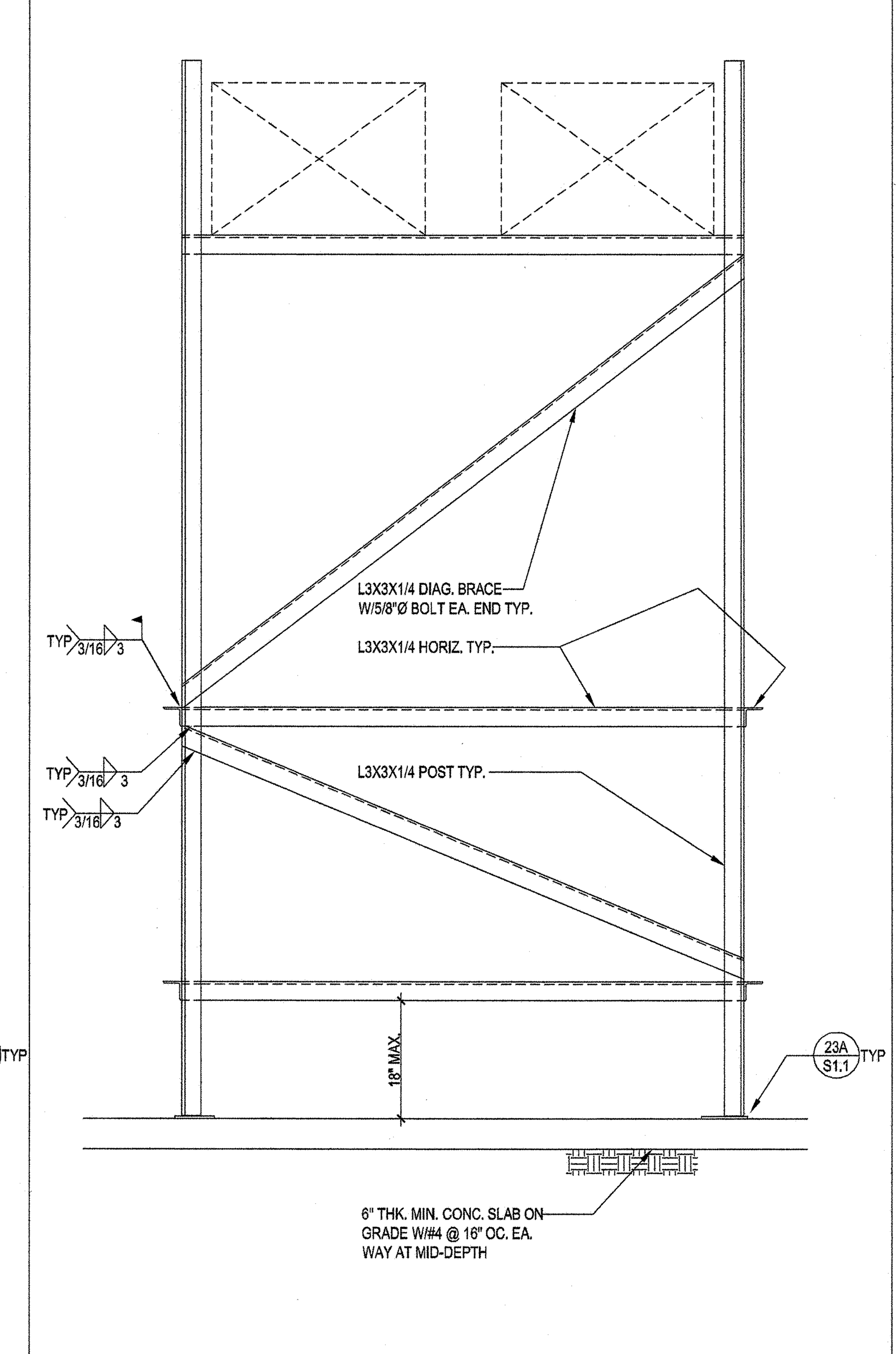

3/4"=1'-0" | 22

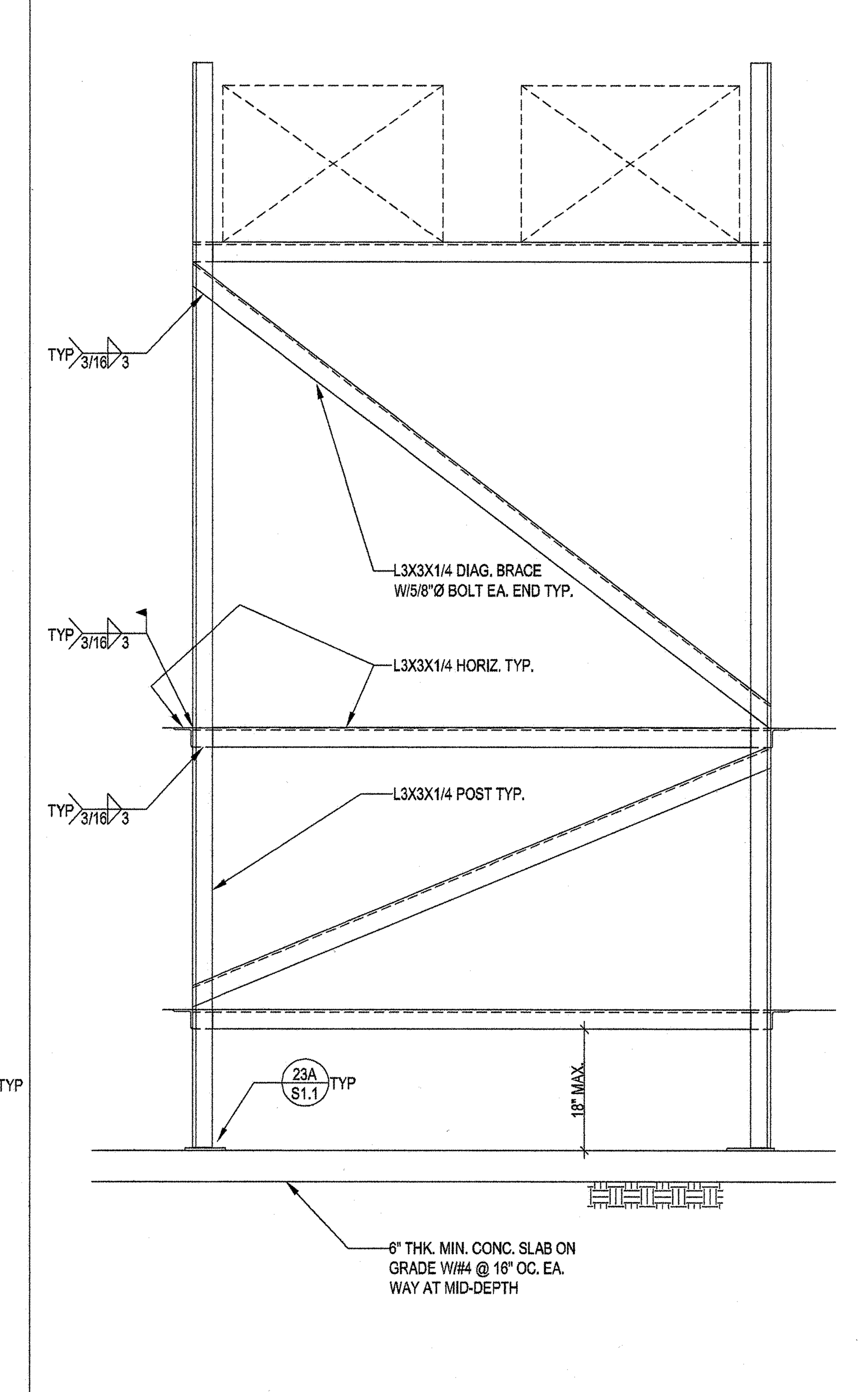

3/4"=1'-0" | 23

WLC ARCHITECTS
CLIENT FOCUSED • PASSION DRIVEN
SOUTHERN CALIFORNIA
8163 ROCHESTER AVENUE, SUITE 100
RANCHO CUCAMONGA
CALIFORNIA 91730-0729
TEL: 909-987-0909
www.wlcarchitects.com

LONGFELOW ELEMENTARY SCHOOL HVAC REPLACEMENT

COMTON UNIFIED SCHOOL DISTRICT
1101 STANFORD AVE.
COMPTON, CA. 90220

LICENSED ARCHITECT MARK GRAHAM C-26046 03-31-19 STATE OF CALIFORNIA

REGISTERED PROFESSIONAL ENGINEER PETER TRAN No. 4628 Exp. 6-30-19 STRUCTURAL STATE OF CALIFORNIA

CONSULTANT
K.B. LEUNG & ASSOCIATES
STRUCTURAL ENGINEERS
9320 BASELINE ROAD, SUITE D
ALTA LOMA, CA 91701
(909) 944 - 0029 PHONE
(909) 944 - 7983 FAX

IDENTIFICATION STAMP
DIV. OF THE STATE ARCHITECT
OFFICE OF REGULATION SERVICES
APPL 03-118423
AC — FLS ✓ SS EY
DATE MAR 0 6 2018
FILE: 19-23

NO	DATE	BY	DESCRIPTION
#			REVISIONS

DRAWN: IDK	CHECKED: PT
DATE: 10/20/17	SCALE: AS NOTED
PROJECT NUMBER: 1723400	

GENERAL NOTES & DETAILS

DRAWING NUMBER: S1.0

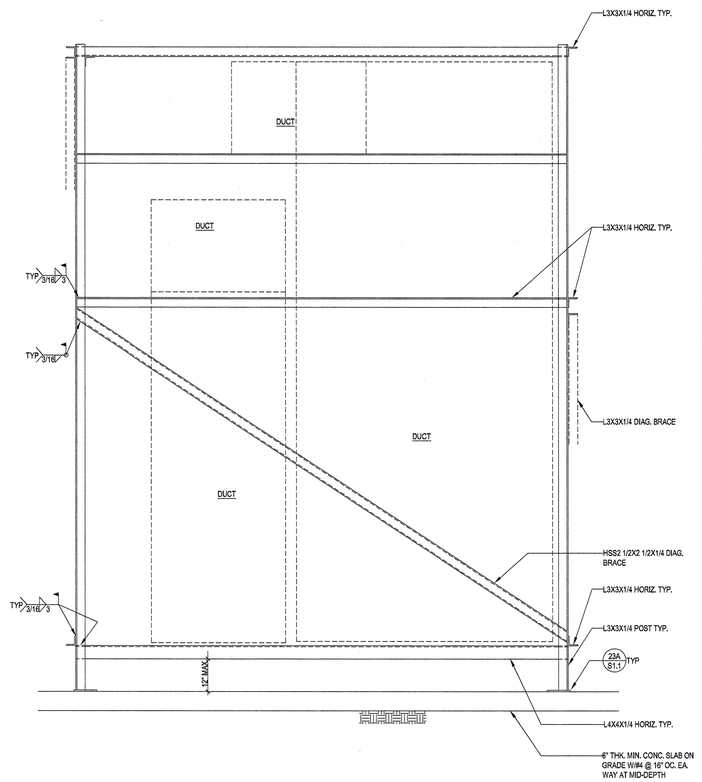

3/4"=1'-0" 8

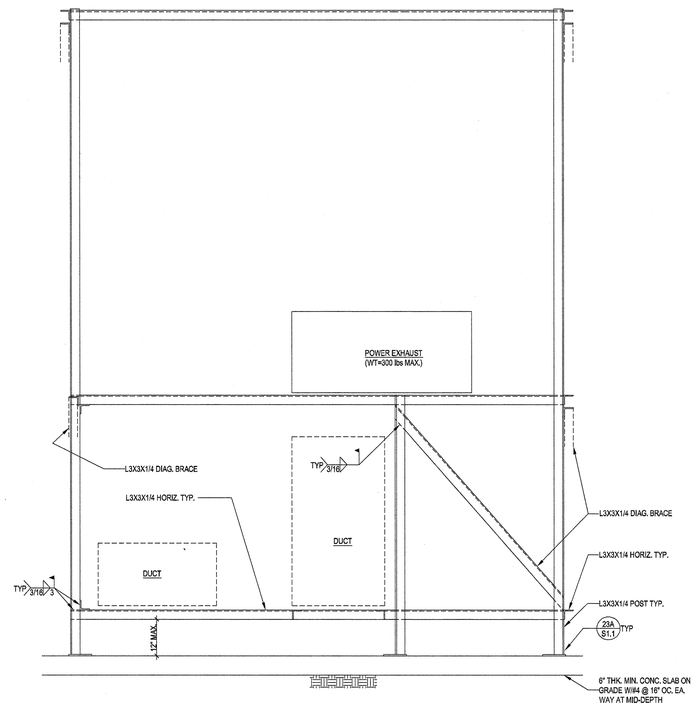

3/4"=1'-0" 10

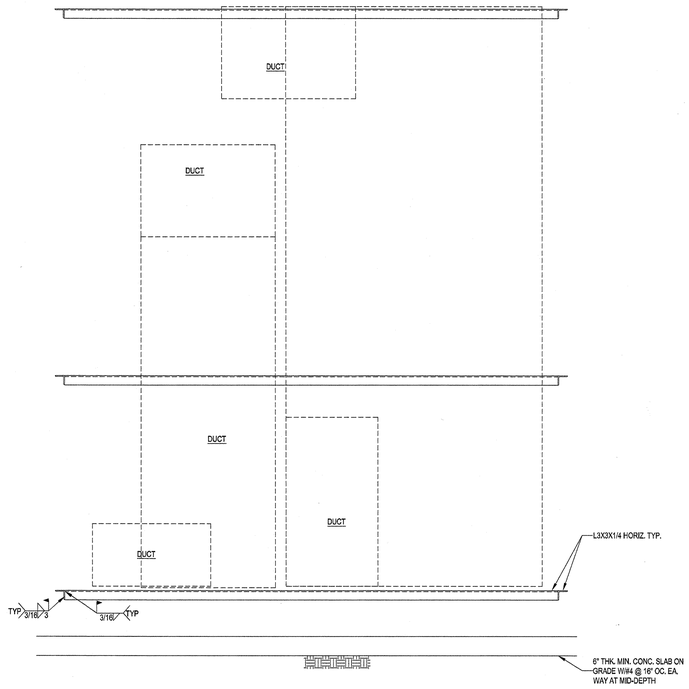

3/4"=1'-0" 12

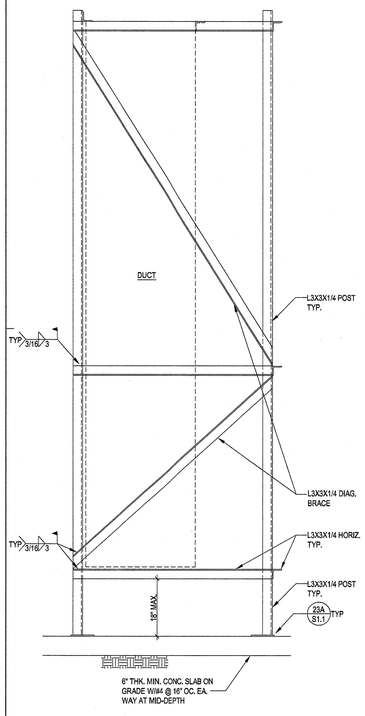

3/4"=1'-0" 19

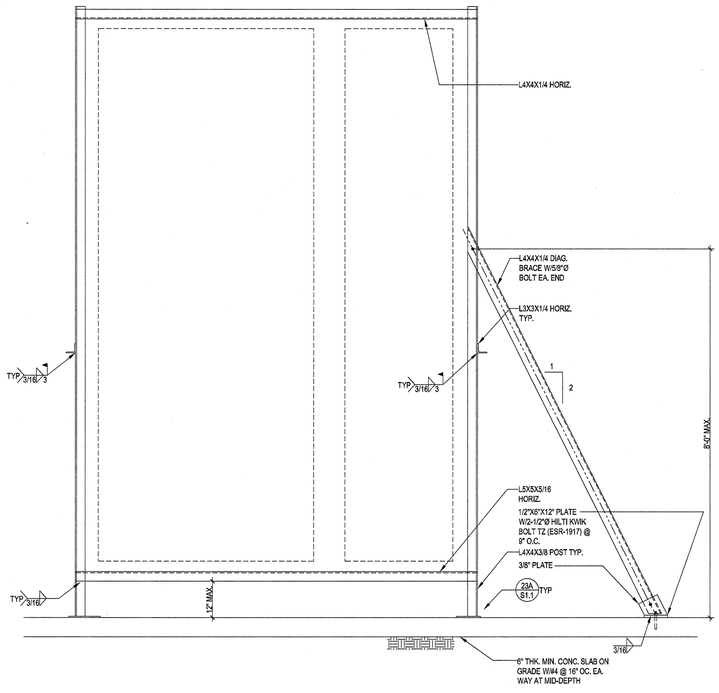

3/4"=1'-0" 21

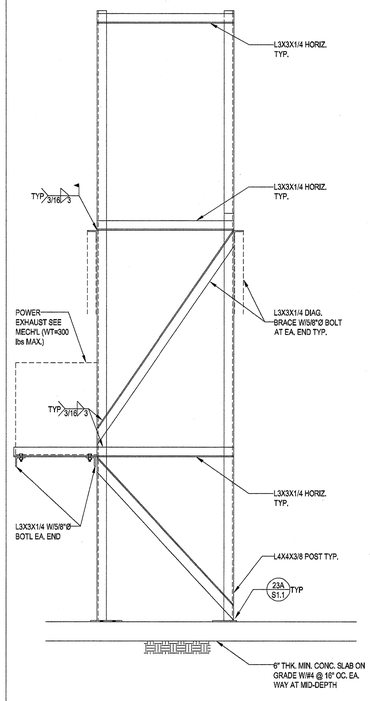

3/4"=1'-0" 22

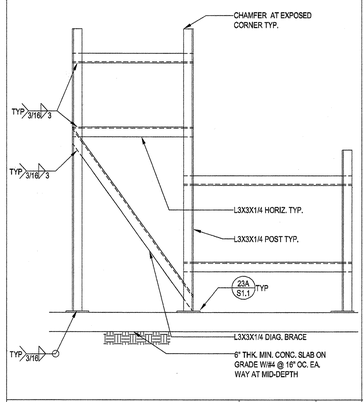

3/4"=1'-0" 17

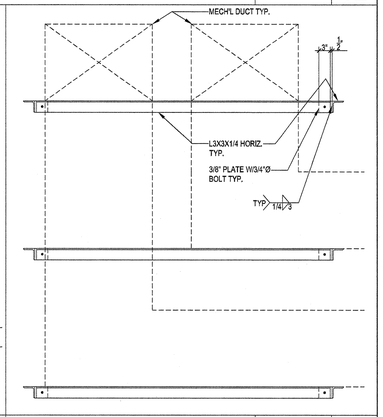

3/4"=1'-0" 18

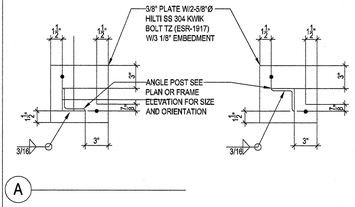

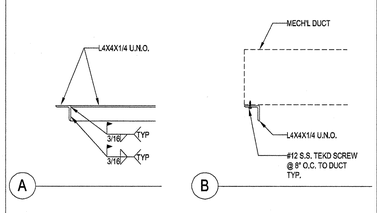

3/4"=1'-0" 23

3/4"=1'-0" 24

ARCHITECTS
WLC
CLIENT FOCUSED • PASSION DRIVEN

SOUTHERN CALIFORNIA
8163 ROCHESTER AVENUE, SUITE 100
RANCHO CUCAMONGA
CALIFORNIA 91730-0729

TEL: 909-987-0909

www.wlcarchitects.com

LONGFELLOW ELEMENTARY SCHOOL HVAC REPLACEMENT

COMTON UNIFIED SCHOOL
1101 BISSELL AVE.
COMPTON, CA. 90220

LICENSED ARCHITECT
MARK GRAHAM
C-26046
03-31-19
STATE OF CALIFORNIA

REGISTERED PROFESSIONAL ENGINEER
PETER TRAN
No. 4628
Exp. 6-30-19
STRUCTURAL
STATE OF CALIFORNIA

CONSULTANT
K.B. LEUNG & ASSOCIATES
STRUCTURAL ENGINEERS
9320 BASELINE ROAD, SUITE D
ALTA LOMA, CA. 91701
(909) 944 - 0029 PHONE
(909) 944 - 7883 FAX

IDENTIFICATION STAMP
DIV. OF THE STATE ARCHITECT
OFFICE OF REGULATION SERVICES
APPL 03-118423
AC. — FLS — SS EY
DATE MAR 0 8 2018
FILE: 19-23

NO	DATE	BY	DESCRIPTION
			REVISIONS

DRAWN: IDK	CHECKED: PT
DATE: 10/20/17	SCALE: AS NOTED
PROJECT NUMBER: 1723400	

DETAILS

DRAWING NUMBER: S1.1

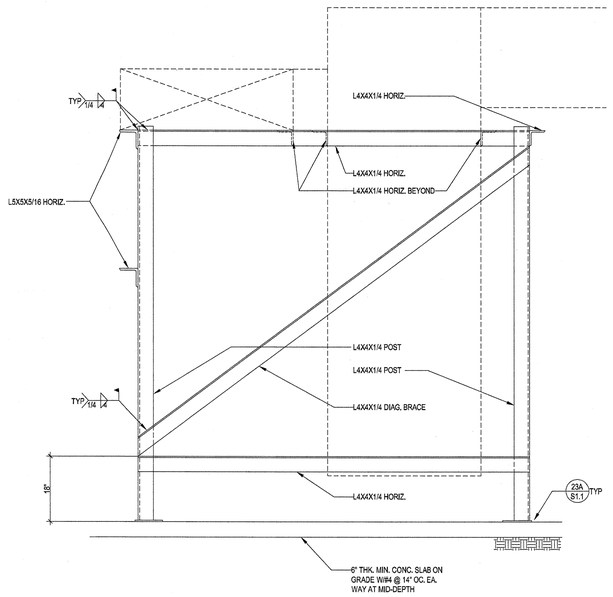

3/4"=1'-0" 8

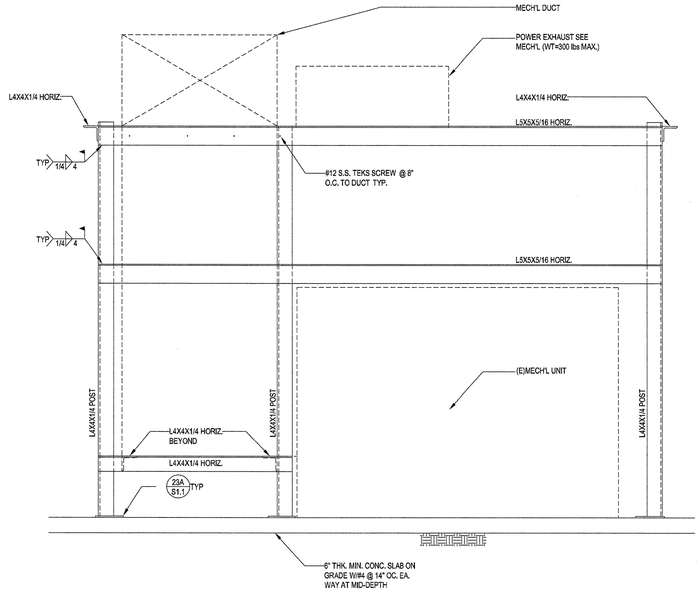

3/4"=1'-0" 10

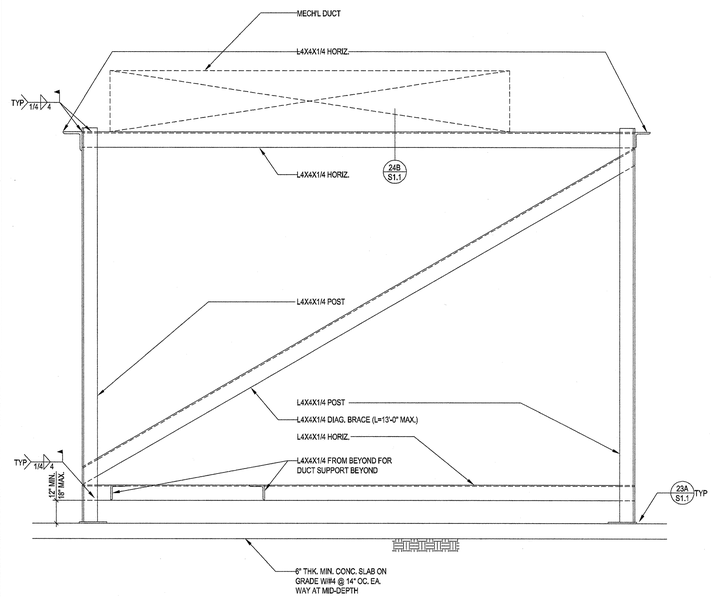

3/4"=1'-0" 12

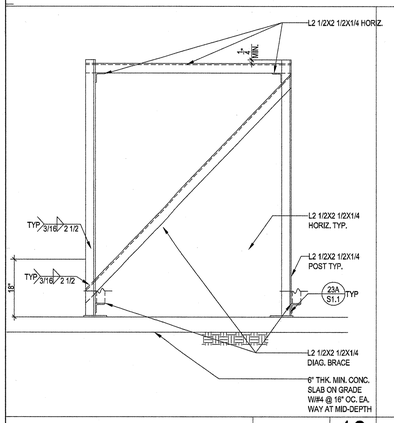

3/4"=1'-0" 13

3/4"=1'-0" 17

3/4"=1'-0" 18

3/4"=1'-0" 21

3/4"=1'-0" 19

3/4"=1'-0" 21

3/4"=1'-0" 22

3/4"=1'-0" 23

3/4"=1'-0" 24

WLC ARCHITECTS
CLIENT FOCUSED • PASSION DRIVEN

SOUTHERN CALIFORNIA
8163 ROCHESTER AVENUE, SUITE 100
RANCHO CUCAMONGA
CALIFORNIA 91730-0729
TEL: 909-987-0909
www.wlcarchitects.com

LONGFELOW ELEMENTARY SCHOOL HVAC REPLACEMENT

COMTON UNIFIED SCHOOL
1101 DISTRICT AVE.
COMPTON, CA. 90220

LICENSED ARCHITECT MARK GRAHAM C-26046 03-31-19 STATE OF CALIFORNIA

REGISTERED PROFESSIONAL ENGINEER PETER TRAN No. 4628 Exp. 6-30-19 STRUCTURAL STATE OF CALIFORNIA

CONSULTANT
K.B. LEUNG & ASSOCIATES
STRUCTURAL ENGINEERS
9320 BASELINE ROAD, SUITE D
ALTA LOMA, CA 91701
(909) 944 - 0029 PHONE
(909) 944 - 7983 FAX

IDENTIFICATION STAMP
DIV. OF THE STATE ARCHITECT
OFFICE OF REGULATION SERVICES
APPL 03-118423
AC — FLS — SS EY
DATE MAR 0 6 2018
FILE: 19-23

NO	DATE	BY	DESCRIPTION
#	REVISIONS		

DRAWN: IDK	CHECKED: PT
DATE: 10/20/17	SCALE: AS NOTED
PROJECT NUMBER: 1723400	

DETAILS

DRAWING NUMBER: S1.2

NOTES:

1. ALL DUCT SUPPORTED BY STEEL ANGLE SHALL BE FASTENED BY #12-24 TEKS SCREW (ESR-1976) @ 12" MAX. O.C. FROM STEEL ANGLE INTO DUCT.
2. PROVIDE #12-24 TEKS SCREW (ESR-1967) @ 8" MAX. O.C. TO ALL POWER EXHAUST.

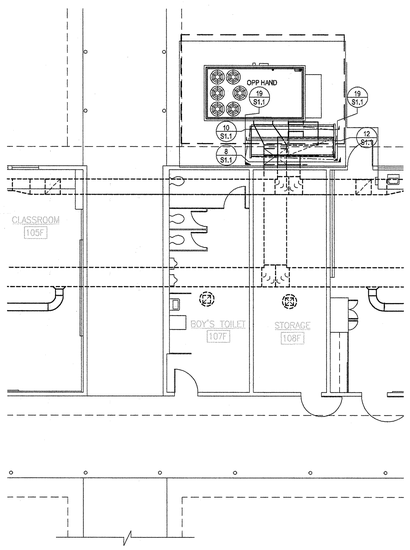

BLD'G C

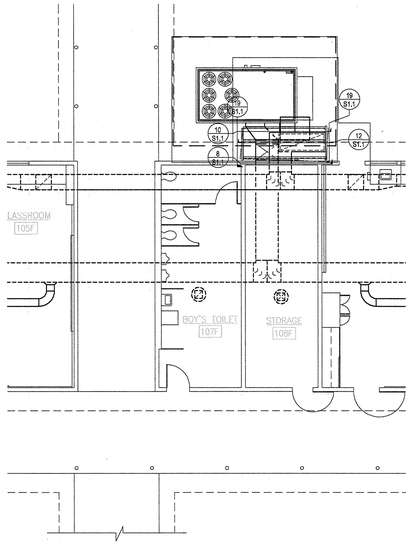

BLD'G F

PARTIAL BUILDING C & F FLOOR PLAN

1/8"=1'-0" | 1

NOTES:

1. ALL DUCT SUPPORTED BY STEEL ANGLE SHALL BE FASTENED BY #12-24 TEKS SCREW (ESR-1976) @ 12" MAX. O.C. FROM STEEL ANGLE INTO DUCT.
2. PROVIDE #12-24 TEKS SCREW (ESR-1967) @ 8" MAX. O.C. TO ALL POWER EXHAUST.

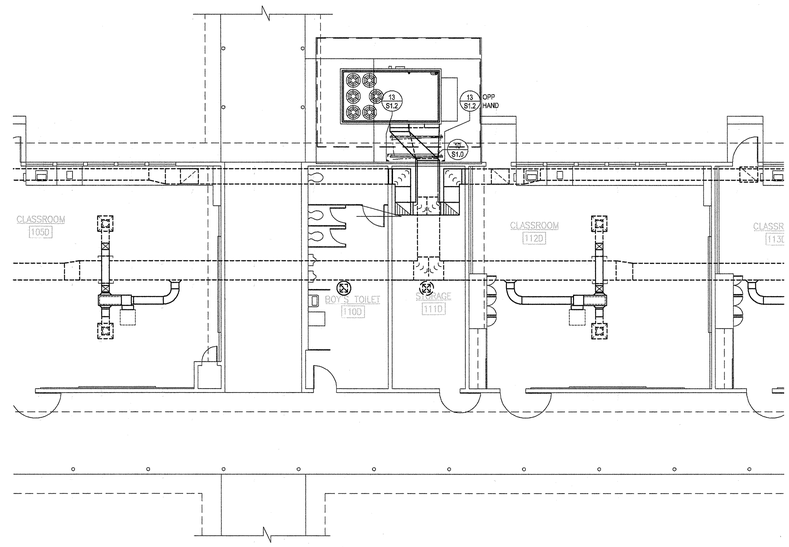

PARTIAL BUILDING D FLOOR PLAN

1/8"=1'-0" | 2

NOTES:

1. ALL DUCT SUPPORTED BY STEEL ANGLE SHALL BE FASTENED BY #12-24 TEKS SCREW (ESR-1976) @ 12" MAX. O.C. FROM STEEL ANGLE INTO DUCT.
2. PROVIDE #12-24 TEKS SCREW (ESR-1967) @ 8" MAX. O.C. TO ALL POWER EXHAUST.

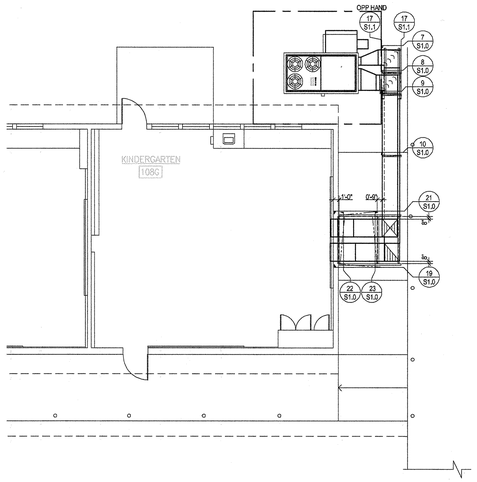

PARTIAL BUILDING G FLOOR PLAN

1/8"=1'-0" | 3

NOTES:

1. ALL DUCT SUPPORTED BY STEEL ANGLE SHALL BE FASTENED BY #12-24 TEKS SCREW (ESR-1976) @ 12" MAX. O.C. FROM STEEL ANGLE INTO DUCT.
2. PROVIDE #12-24 TEKS SCREW (ESR-1967) @ 8" MAX. O.C. TO ALL POWER EXHAUST.

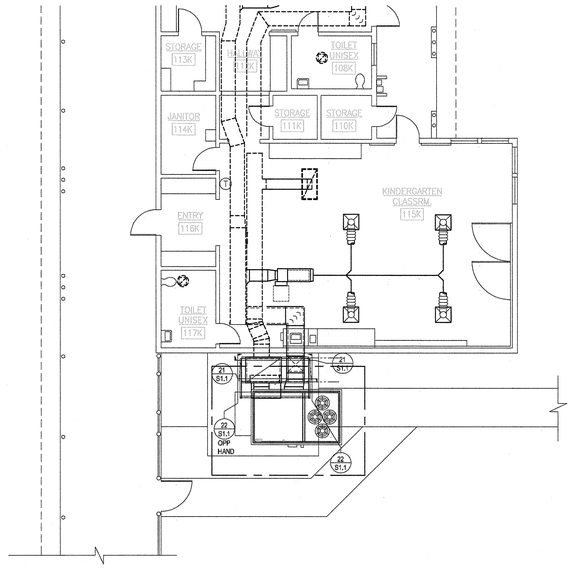

PARTIAL BUILDING K FLOOR PLAN

1/8"=1'-0" | 4

NOTES:

1. ALL DUCT SUPPORTED BY STEEL ANGLE SHALL BE FASTENED BY #12-24 TEKS SCREW (ESR-1976) @ 12" MAX. O.C. FROM STEEL ANGLE INTO DUCT.
2. PROVIDE #12-24 TEKS SCREW (ESR-1967) @ 8" MAX. O.C. TO ALL POWER EXHAUST.

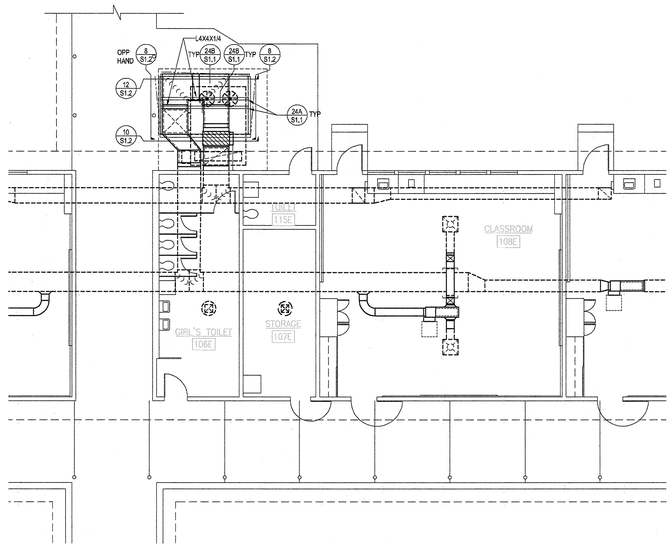

PARTIAL BUILDING E FLOOR PLAN

1/8"=1'-0" | 5

ARCHITECTS
WLC
CLIENT FOCUSED • PASSION DRIVEN

SOUTHERN CALIFORNIA
8163 ROCHESTER AVENUE, SUITE 100
RANCHO CUCAMONGA
CALIFORNIA 91730-0729

TEL: 909-987-0909

www.wlcarchitects.com

LONGFELOW ELEMENTARY SCHOOL HVAC REPLACEMENT

COMTON UNIFIED SCHOOL DISTRICT
1101 BULLIS AVE.
COMPTON, CA. 90220

LICENSED ARCHITECT
MARK GRAHAM
C-26046
03-31-19
STATE OF CALIFORNIA

REGISTERED PROFESSIONAL ENGINEER
PETER TRAN
No. 4628
Exp. 6-30-19
STRUCTURAL
STATE OF CALIFORNIA

CONSULTANT
K.B. LEUNG & ASSOCIATES
STRUCTURAL ENGINEERS
9330 BASELINE ROAD, SUITE D
ALTA LOMA, CA 91701
(909) 944 - 0029 PHONE
(909) 944 - 7983 FAX

IDENTIFICATION STAMP
DIV. OF THE STATE ARCHITECT
OFFICE OF REGULATION SERVICES
APPL 03-118423
AC ___ FLS ___ SS BY
DATE AUG 0 6 2018

FILE: 19-23

NO	DATE	BY	DESCRIPTION
1			REVISIONS

DRAWN: IDK	CHECKED: PT
DATE: 10/20/17	SCALE: AS NOTED
PROJECT NUMBER: 1723400	

BLD'G C, D, F, G, K
PARTIAL FLOOR PLAN

DRAWING NUMBER: S2.1

GENERAL NOTES

----- GENERAL NOTES -----

1. ENTIRE INSTALLATION SHALL CONFORM TO THE REQUIREMENTS OF THE 2016 CALIFORNIA MECHANICAL CODE, 2016 CALIFORNIA BUILDING CODE, AND ALL OTHER APPLICABLE CODES AND REGULATIONS, INCLUDING 2016 BUILDING ENERGY EFFICIENCY STANDARDS DIVISION T-24.

2. 2016 CALIFORNIA GREEN BUILDING STANDARDS (CALGREEN) CODE INCLUDING THE APPLICABLE MANDATORY MEASURES:

   - 5.201.1 CALIFORNIA ENERGY CODE. FOR THE PURPOSES OF MANDATORY ENERGY EFFICIENCY STANDARDS IN THIS CODE, THE CALIFORNIA ENERGY COMMISSION WILL CONTINUE TO ADOPT MANDATORY STANDARDS.
   - 5.504.3: COVERING OF DUCT OPENINGS AND PROTECTION OF MECHANICAL EQUIPMENT DURING CONSTRUCTION. AT THE TIME OF ROUGH INSTALLATION AND DURING STORAGE ON THE CONSTRUCTION SITE UNTIL FINAL STARTUP OF THE HEATING, COOLING AND VENTILATING EQUIPMENT, ALL DUCT AND OTHER RELATED AIR DISTRIBUTION COMPONENT OPENINGS SHALL BE COVERED WITH TAPE, PLASTIC, SHEET METAL OR OTHER METHODS ACCEPTABLE TO THE ENFORCING AGENCY TO REDUCE THE AMOUNT OF DUST, WATER AND DEBRIS WHICH MAY ENTER THE SYSTEM.
   - 5.504.5.3.1 FILTERS. IN MECHANICALLY VENTILATED BUILDINGS, PROVIDE REGULARLY OCCUPIED AREAS OF THE BUILDING WITH AIR FILTRATION MEDIA FOR OUTSIDE AND RETURN AIR PRIOR TO OCCUPANCY THAT PROVIDES AT LEAST A MINIMUM EFFICIENCY REPORTING VALUE (MERV) OF 8. MERV 8 FILTERS SHALL BE INSTALLED PRIOR TO OCCUPANCY AND RECOMMENDATIONS FOR MAINTENANCE WITH FILTERS OF THE SAME VALUE SHALL BE INCLUDED IN THE OPERATION AND MAINTENANCE MANUAL. EXCEPTIONS:
     - a. AN ASHRAE 10-PERCENT TO 30-PERCENT EFFICIENCY FILTER SHALL BE PERMITTED FOR AN HVAC UNIT MEETING THE 2016 CALIFORNIA ENERGY CODE HAVING 60,000 BTU/H OR LESS CAPACITY PER FAN COIL, IF THE ENERGY USE OF THE AIR DELIVERY SYSTEM IS 0.4 W/CFM OR LESS AT THE DESIGN AIR FLOW.
     - b. EXISTING MECHANICAL EQUIPMENT.
   - 5.506.1 OUTSIDE AIR DELIVERY. FOR MECHANICALLY OR NATURALLY VENTILATED SPACES IN BUILDINGS, MEET THE MINIMUM REQUIREMENTS OF SECTION 121 (REQUIREMENTS FOR VENTILATION) OF THE 2016 CALIFORNIA ENERGY CODE, OR THE APPLICABLE LOCAL CODE, WHICHEVER IS MORE STRINGENT, AND DIVISION 1, CHAPTER 4 OF CCR, TITLE 8.
   - 5.508.1 OZONE DEPLETION AND GREENHOUSE GAS REDUCTIONS. INSTALL HVAC AND REFRIGERATION AND FIRE SUPPRESSION EQUIPMENT SHALL COMPLY WITH 5.508.1.1 AND 5.508.1.2.
   - 5.508.1.1 CHLOROFLUOROCARBONS (CFCS). INSTALL HVAC, REFRIGERATION AND FIRE SUPPRESSION EQUIPMENT THAT DO NOT CONTAIN CFCS.
   - 5.508.1.2 HALONS. INSTALL HVAC, REFRIGERATION AND FIRE SUPPRESSION EQUIPMENT THAT DO NOT CONTAIN HALONS.
   - ADHESIVES, SEALANTS AND CAULKS SHALL MEET CALGREEN REQUIREMENTS.
   - INSTALLER AND SPECIAL INSPECTORS SHALL MEET ALL QUALIFICATIONS LISTED IN SECTION 702 OF THE 2016 CALIFORNIA GREEN BUILDING STANDARDS CODE.

3. COORDINATE ENTIRE INSTALLATION OF THE HVAC SYSTEM WITH THE WORK OF ALL OTHER TRADES PRIOR TO ANY FABRICATION OR INSTALLATION. PROVIDE ALL FITTINGS, OFFSETS, AND TRANSITIONS AS REQUIRED FOR A COMPLETE WORKABLE INSTALLATION. THE MECHANICAL CONTRACTOR SHALL BE RESPONSIBLE TO COORDINATE ITEMS TO BE PROVIDED BY OTHER TRADES WHERE MENTIONED IN THE CONTRACT DOCUMENTS PRIOR TO BID – NO EXCEPTIONS.
4. COORDINATE THE LOCATIONS OF ALL CEILING DIFFUSERS, REGISTERS, AND GRILLES WITH THE ARCHITECTURAL REFLECTIVE CEILING PLAN, ELECTRICAL LIGHTING LAYOUT AND ARCHITECTURAL ROOM ELEVATIONS. THE ARCHITECT AND ENGINEER SHALL BE IMMEDIATELY NOTIFIED OF ANY CONFLICTS PRIOR TO FABRICATION AND INSTALLATION.
5. CONTRACTOR SHALL NOTIFY OWNER AND ENGINEER OF CONSTRUCTION PHASING PRIOR TO START OF CONSTRUCTION, REMOVAL, AND/OR REPLACEMENT OF ANY EQUIPMENT. CONTRACTOR SHALL RECEIVE PERMISSION IN WRITING PRIOR TO THE START OF ANY WORK DURING ANY PHASE FOR WORK SHOWN HEREIN. IT SHALL BE THE RESPONSIBILITY OF THE CONTRACTOR TO CONDUCT WORK AND ARRANGE HIS WORK IN A MANNER THAT WILL CAUSE MINIMAL INTERFERENCE WITH DAILY FUNCTIONS WITHIN THE FACILITY. ANY EXPECTED DOWNTIME SHALL BE COORDINATED WITH THE OWNER.
6. ALL EQUIPMENT, DUCTS, PIPING, AND OTHER DEVICES AND MATERIALS INSTALLED OUTSIDE OF THE BUILDING OR OTHERWISE EXPOSED TO THE WEATHER SHALL BE COMPLETELY WEATHER-PROOFED AND PAINTED TO MATCH, COORDINATE WITH ARCHITECT PRIOR TO PAINTING.
7. THE OWNER ACKNOWLEDGES THAT THE DESIGN PROFESSIONAL'S PLANS ARE INSTRUMENTS OF PROFESSIONAL SERVICE. NEVERTHELESS, THE PLANS PREPARED UNDER THIS AGREEMENT SHALL BECOME THE PROPERTY OF THE OWNER UPON COMPLETION OF THE WORK. THE OWNER AGREES TO HOLD HARMLESS AND INDEMNIFY THE DESIGN PROFESSIONAL AGAINST ALL DAMAGES, CLAIMS AND LOSSES, INCLUDING DEFENSE COSTS, ARISING OUT OF ANY RESCUE OF THE PLANS WITHOUT THE WRITTEN AUTHORIZATION OF THE DESIGN PROFESSIONAL.
8. ALL DIMENSIONS SHOWN ON THESE PLANS ARE APPROXIMATE AND MUST BE CONFIRMED ON SITE.
9. PRIOR TO OCCUPANCY, THE ENTIRE H.V.A.C. SYSTEMS SHALL BE BALANCED IN ACCORDANCE WITH (AABC) ASSOCIATED AIR BALANCE COUNCIL STANDARDS BY AN INDEPENDENT AIR BALANCE CONTRACTOR. CERTIFICATION SHALL BE PROVIDED BY THE CONTRACTOR FOR AIR AND HYDRONIC AS APPLICABLE. SYSTEMS SHALL BE BALANCED AS INDICATED ON PLANS INCLUDING FRESH AIR VENTILATION. WHERE THERE IS A CONFLICT WITH THE MECHANICAL PLANS, THE AIR BALANCE CONTRACTOR SHALL NOTIFY THE ENGINEER PRIOR TO BALANCING OF SYSTEM. IF NOT THE AIR BALANCE CONTRACTOR SHALL BEAR ALL COSTS INCURRED FOR WORK THAT MUST BE RE-BALANCED DUE TO CONFLICTS ON CONTRACT DOCUMENTS. CONTRACTOR SHALL PROVIDE THREE COPIES OF THE AIR BALANCE REPORT TO THE ENGINEER FOR APPROVAL.
10. FOR INACCESSIBLE AREAS THE CONTRACTOR SHALL PROVIDE ACCESS PANELS FOR ALL DAMPERS, EQUIPMENT, SMOKE DETECTORS, AND CONTROL DEVICES. THESE PANELS SHALL MATCH THE RATING OF THE WALL AND/OR CEILING THAT THEY ARE LOCATED IN. MINIMUM ACCESS PANEL SIZES SHALL BE AS FOLLOWS:

    1) HAND ACCESS: 12"x12"

    2) BODY ACCESS: 30"x30" MIN. WHERE A LARGER ACCESS SIZE IS REQUIRED DUE TO INSTALLATION CONSTRAINTS, THE CONTRACTOR SHALL DO SO AT NO ADDITIONAL COST AND SHALL NOTIFY THE ARCHITECT AND ENGINEER OF DEVIATIONS PRIOR TO INSTALLATION.
11. COORDINATE THE LOCATION OF ALL ROOF OPENINGS AND THE LOCATION OF ALL ROOF MOUNTED EQUIPMENT WITH THE STRUCTURAL AND ARCHITECTURAL PLANS PRIOR TO ANY INSTALLATION.
12. PLATFORMS, CURBS, AND FLASHINGS FOR MECHANICAL EQUIPMENT SHALL BE AS INDICATED ON THE STRUCTURAL AND ARCHITECTURAL PLANS, UNLESS NOTED OTHERWISE. WHERE THERE IS A CONFLICT WITH THE MECHANICAL PLANS, THE CONTRACTOR SHALL NOTIFY THE ARCHITECT AND ENGINEER PRIOR TO FABRICATION AND INSTALLATION.
13. ALL EQUIPMENT, ACCESSORIES, AND RELATED PIPING SHALL BE INSTALLED IN STRICT ACCORDANCE WITH THE EQUIPMENT MANUFACTURER'S RECOMMENDATIONS. PROVIDE ALL FITTINGS, TRANSITIONS, DAMPERS, VALVES, AND OTHER DEVICES REQUIRED FOR A COMPLETE WORKABLE INSTALLATION.
14. MAINTENANCE LABEL SHALL BE AFFIXED TO ALL MECHANICAL EQUIPMENT AND A MAINTENANCE MANUAL SHALL BE PROVIDED FOR THE OWNER'S USE.
15. PROVIDE MERV 13 EFFICIENCY THROWAWAY FILTERS FOR ALL AIR CONDITIONING UNITS. SEE EQUIPMENT SCHEDULE AND SPECIFICATIONS FOR TYPE. SIZES SHALL BE AS RECOMMENDED BY THE MANUFACTURER, UNLESS OTHERWISE SPECIFIED.
16. AIR FILTERS SHALL BE STATE FIRE MARSHALL APPROVED AND LISTED. PREFORMED FILTERS HAVING COMBUSTIBLE FRAMING SHALL BE TESTED AS A COMPLETE ASSEMBLY. AIR FILTERS SHALL BE ACCESSIBLE FOR CLEANING OR REPLACEMENT.
17. ALL EQUIPMENT WITH MOVING PARTS SHALL BE PROVIDED WITH FLEXIBLE DUCT AND PIPE CONNECTIONS.
18. ALL EQUIPMENT SHALL BE LABELED AS TO THE SPACE IT SERVES.
19. ALL HVAC EQUIPMENT SHALL BE CERTIFIED BY THE CALIFORNIA ENERGY COMMISSION TO COMPLY WITH LATEST EFFICIENCY STANDARDS.
20. PROVIDE MANUAL VOLUME DAMPERS AND BACKDRAFT DAMPERS FOR FRESH AIR INTAKES ON ALL AIR HANDLING EQUIPMENT AND EXHAUST FANS SERVING CONDITIONED SPACES. EXCEPTION: EQUIPMENT WITH FACTORY ECONOMIZERS. DAMPERS SITUATED ON THE ROOF SHALL BE SECURED AFTER BALANCING, TO AVOID THE POSSIBILITY OF ADJUSTMENT.
21. ALL AIR HANDLING EQUIPMENT SERVING CONDITIONED SPACES SHALL PROVIDE CONTINUOUS FRESH AIR TO SPACES IN OCCUPIED MODE.
22. CONTRACTOR SHALL VERIFY ALL CLEARANCES AND AVAILABLE SPACE FOR DUCTWORK PRIOR TO ORDERING AND/OR FABRICATING MATERIAL.
23. CONTRACTOR TO SUBMIT ALL EQUIPMENT, DUCTWORK, AIR DISTRIBUTION DEVICES, AND OTHER ACCESSORIES TO THE ENGINEER FOR APPROVAL PRIOR TO ANY ORDERING OF SUCH ITEMS.
24. CONTRACTOR SHALL BE RESPONSIBLE FOR COMMISSIONING OF EQUIPMENT.
25. PAINT EXPOSED SURFACES, WHETHER OR NOT COLORS ARE DESIGNATED IN SCHEDULES, EXCEPT WHERE A SURFACE OR MATERIAL IS SPECIFICALLY INDICATED NOT TO BE PAINTED OR IS TO REMAIN NATURAL. WHERE AN ITEM OR SURFACE IS NOT SPECIFICALLY MENTIONED, PAINT THE SAME AS SIMILAR ADJACENT MATERIALS OR SURFACES. IF COLOR OR FINISH IS NOT DESIGNATED, THE OWNER'S REPRESENTATIVE WILL SELECT FROM STANDARD COLORS OR FINISHES AVAILABLE.

    1) PAINTING INCLUDES FIELD PAINTING EXPOSED BARE AND COVERED PIPES AND DUCTS (INCLUDING COLOR CODING), HANGERS, EXPOSED STEEL AND IRON WORK, AND PRIMED METAL SURFACES OF MECHANICAL AND ELECTRICAL EQUIPMENT.
26. ALL MECHANICAL PIPING SYSTEMS, DUCTS, CONTROLS, VALVES, APPARATUS, ETC., EXCEPT THOSE THAT ARE INSTALLED IN INACCESSIBLE LOCATIONS IN PARTITIONS, WALLS, AND FLOORS, AND THOSE BURIED UNDERGROUND, SHALL BE PERMANENTLY MARKED AND IDENTIFIED AS INDICATED IN THE RELATED SPECIFICATIONS.
27. UNLESS SPECIFICALLY SHOWN ON THESE PLANS NO STRUCTURAL MEMBER SHALL BE CUT, DRILLED NOR NOTCHED WITHOUT PRIOR WRITTEN AUTHORIZATION FROM THE STRUCTURAL ENGINEER AND THE DISTRICT STRUCTURAL ENGINEER FROM THE DIVISION OF THE STATE ARCHITECT.
28. CONTRACTOR TO BALANCE THE AIRFLOW FOR THE HVAC UNITS AND ALSO CHECK PROPER OPERATION OF THE ECONOMIZER/ POWER EXHAUST TO MAINTAIN 0.02 INCHES MAXIMUM DIFFERENTIAL PRESSURE AT EACH DOOR TO MEET THE ADA REQUIREMENTS FOR DOOR OPENING/CLOSURE OF NO MORE THAN 5 POUNDS. CONTRACTOR TO MAKE NECESSARY ADJUSTMENTS TO MEET THESE REQUIREMENTS

----- CONTROLS -----

1. CONTROL SCHEMATICS ARE FOR SEQUENCE ONLY. REFER TO ELECTRICAL DRAWINGS AND SPECIFICATIONS FOR ALL ELECTRICAL DEVICES REQUIRED.
2. ALL LINE VOLTAGE WIRING SHALL BE INSTALLED IN CONDUIT. ALL LINE VOLTAGE CONDUIT AND WIRING, INCLUDING FINAL CONNECTIONS, SHALL BE FURNISHED AND INSTALLED BY THE ELECTRICAL CONTRACTOR AS INDICATED ON THE ELECTRICAL DRAWINGS OR SPECIFIED IN THE ELECTRICAL SECTION OF THE SPECIFICATIONS. ALL ELECTRICAL WORK SHALL BE INSTALLED IN ACCORDANCE WITH ALL APPLICABLE CODES AND REGULATIONS OF ALL GOVERNING BODIES HAVING JURISDICTION THEREOF.
3. ALL LOW VOLTAGE CONDUIT AND WIRING AS APPLICABLE, INCLUDING FINAL CONNECTIONS, SHALL BE FURNISHED AND INSTALLED BY THE MECHANICAL CONTRACTOR AS INDICATED ON THE MECHANICAL DRAWINGS.

    A1) ALL LOW VOLTAGE WIRING SHALL BE INSTALLED IN CONDUIT.

    A2) ALL LOW VOLTAGE WIRING SHALL BE PLENUM – RATED.

    B) WHERE THE CONTROLS CONTRACTOR IS RETAINED BY THE OWNER, THEY SHALL BE RESPONSIBLE FOR THE FOLLOWING:

    1) FURNISH AND INSTALL ALL DEVICES, WIRING, AND TERMINATIONS REQUIRED FOR A COMPLETE AND FUNCTIONAL INSTALLATION.

    2) COORDINATE ALL WORK AND REQUIREMENTS WITH OTHER TRADES INCLUDING GENERAL, MECHANICAL, AND ELECTRICAL CONTRACTORS PRIOR TO BID.

    3) CONTRACTOR SHALL FOLLOW ALL SUBMITTAL REQUIREMENTS PER DRAWINGS.
4. CONTRACTOR SHALL BE RESPONSIBLE FOR ORDERING AIR CONDITIONING EQUIPMENT WITH THRU-THE-BASE POWER, CONTROL, AND GAS CONNECTIONS. VERIFY ALL CONNECTION LOCATIONS WITH UNIT MANUFACTURER AND COORDINATE WITH OTHER TRADES AS NECESSARY.
5. ELECTRICAL CONTRACTOR SHALL PROVIDE REQUIRED RELAY ACCESSORIES FOR CONNECTION OF 120 VOLT 1 PHASE VENTILATION EQUIPMENT TO 277 VOLT 1 PHASE LIGHTING AS APPLICABLE.
6. ALL THERMOSTATS SHALL HAVE LOCKABLE COVERS (WHERE INDICATED ON PLANS) AND SHALL BE OF THE ELECTRONIC, PROGRAMMABLE, AUTOMATIC CHANGEOVER TYPE TO SEQUENCE HEATING OR COOLING. SET POINT RANGE SHALL BE 10 DEGREES F. BETWEEN FULL HEATING AND COOLING. THEY SHALL HAVE CAPABILITY OF TERMINATING ALL HEATING AT A TEMPERATURE NO MORE THAN 70 DEGREES F., AND COOLING AT A TEMPERATURE NOT LESS THAN 78 DEGREES F. ADJUSTABLE TEMPERATURE DIFFERENTIAL SHALL BE 1– 1/2 DEGREES F. CONTROL LIMITS SHALL BE FROM 55 DEGREES F. TO 85 DEGREES F. MOUNT AT 48 INCHES ABOVE FLOOR OR AS REQUIRED BY LOCAL AUTHORITIES OR HANDICAP CODES.

    NOTES: 1) THERMOSTATS THAT ARE PART OF AN ENERGY MANAGEMENT SYSTEM SHALL FOLLOW CONTROL SPECIFICATIONS AND DRAWING REQUIREMENTS.

    2) SHOULD THE LOCATION OF THE THERMOSTAT NOT MEET THE ADA HEIGHT REQUIREMENTS DUE TO OBSTRUCTIONS, THEN AN ALTERNATE LOCATION SHALL BE PROPOSED OR REQUESTED BY THE CONTRACTOR THAT SHALL BE APPROVED BY THE ENGINEER AND ARCHITECT.
7. LINE VOLTAGE THERMOSTATS SHALL BE FURNISHED BY THE MECHANICAL CONTRACTOR AND INSTALLED BY THE ELECTRICAL CONTRACTOR.
8. CONTROLS CONTRACTOR AND AIR BALANCE CONTRACTOR SHALL COORDINATE WORK AND PERFORM NECESSARY TASKS AS REQUIRED TO OBTAIN AIR AND WATER FLOW QUANTITIES FOR SYSTEMS SHOWN HEREIN.

    CONTROLS SHALL BE PROVIDED TO PROVIDE THE MINIMUM RATE OF OUTDOOR AIR REQUIRED BY THE STATE ENERGY REGULATIONS.
9. ----- AIR DISTRIBUTION -----
1. ALL DUCTWORK SHALL BE SHEET METAL CONSTRUCTED OR SPIRAL ERECTED, AND TESTED IN ACCORDANCE WITH THE MOST RESTRICTIVE OF LOCAL REGULATIONS, PROCEDURES DETAILED IN THE ASHRAE HANDBOOK OF FUNDAMENTALS, CHAPTER 6 OF THE MECHANICAL CODE, OR THE APPLICABLE STANDARDS ADOPTED BY THE SHEET METAL AND AIR CONDITIONING CONTRACTORS NATIONAL ASSOCIATION.
2. CONTRACTOR SHALL PROVIDE EXTERIOR MANUAL VOLUME DAMPER HANDLES W/ LOCK-DOWN AFTER COMPLETING AIR BALANCE & OBTAIN FINAL APPROVAL FROM ENGINEER.
3. ALL FLEXIBLE DUCTWORK SHALL NOT EXCEED SEVEN FEET IN LENGTH TO RESPECTIVE DIFFUSERS, GRILLES, AND REGISTERS, OR OTHER AIR DEVICES.
4. PROVIDE SEISMIC RESTRAINTS TO ALL DUCTWORK, PIPE, AND EQUIPMENT SUPPORTS IN ACCORDANCE WITH THE LATEST SMACNA GUIDELINES FOR SEISMIC RESTRAINT OF MECHANICAL SYSTEMS. SUSPENDED EQUIPMENT SHALL BE PROVIDED WITH SEISMIC ANCHORAGE AND ISOLATION SUPPORTS.
5. ALL DUCT TURNS IN SUPPLY, RETURN, AND EXHAUST DUCTS SHALL HAVE SINGLE WALL TURNING VANES WITH TRAILING EDGE, UNLESS OTHERWISE NOTED.
6. DUCTWORK HANDLING CONDITIONED AIR SHALL BE INSULATED OR LINED AS INDICATED ON DRAWINGS. SUPPLY AND RETURN DUCT INSULATION SHALL BE MIN. 2" THICK, 1.5 LB./CUBIC FT. DENSITY AND HAVE A MIN. VALUE OF R-8 WHERE LOCATED IN ONE OR MORE OF THE FOLLOWING SPACES:

    A) OUTDOORS, OR

    B) IN A SPACE BETWEEN THE ROOF AND AN INSULATED CEILING, OR

    C) IN A SPACE DIRECTLY UNDER A ROOF WITH FIXED VENTS OR OPENINGS TO THE OUTSIDE OR UNCONDITIONED SPACES, OR

    D) IN AN UNCONDITIONED CRAWLSPACE; OR

    E) IN OTHER UNCONDITIONED SPACES

    PER 2016 CEC, OTHERWISE PROVIDE R-6.2 WHEN LOCATED IN CONDITIONED ATTIC SPACES ABOVE CEILINGS . ALL DUCTWORK EXPOSED ON ROOF SHALL BE INTERNALLY LINED WITH 2" THICK, 1.5LB./CUBIC FT. DENSITY DUCT LINER UNLESS OTHERWISE INDICATED OR SPECIFIED. ALL DUCT SIZES ARE NET CLEAR INSIDE DIMENSIONS. ALL DUCT JOINTS SHALL BE SEALED PER CHAPTER 6 MECHANICAL CODE REQUIREMENTS. PROVIDE PIPING AND DUCT INSULATION IN ACCORDANCE WITH THE LATEST STANDARDS OF THE CALIFORNIA ENERGY COMMISSION.
7. ALL INSULATION SHALL HAVE A FLAME SPREAD OF NOT MORE THAN 25 AND A SMOKE DENSITY NOT EXCEEDING 50.
8. MANUAL VOLUME DAMPERS SHALL BE PROVIDED IN ALL DUCT BRANCHES TO INDIVIDUAL DIFFUSERS, GRILLES, AND REGISTERS, AS WELL AS FRESH AIR INTAKE DUCTS. DAMPERS SHALL BE LOCATED AT THE BRANCH DUCT LOCATIONS. THE MECHANICAL CONTRACTOR SHALL COORDINATE LOCATIONS OF DAMPERS WITH THE AIR BALANCE CONTRACTOR PRIOR TO BID, SO THEY ARE ACCESSIBLE PRIOR TO INSTALLATION. IN LOCATIONS WHERE THESE DAMPERS ARE INACCESSIBLE, CABLE OPERATED ADJUSTMENT CONTROLS SHALL BE PROVIDED AT NO ADDITIONAL COST. OPPOSED BLADE DAMPERS SHALL NOT BE PERMITTED UNLESS NOTED OTHERWISE.
9. AUTOMATIC SMOKE FIRE DAMPER REQUIREMENTS ARE AS FOLLOWS:

    A) PROVIDE AUTOMATIC SMOKE FIRE DAMPERS AT ALL PENETRATIONS OF FIRE-RATED CEILINGS AND WALLS THROUGHOUT. CONTRACTOR SHALL COORDINATE FIRE-RATED AREAS WITH THE MECHANICAL DRAWINGS AND OTHER TRADES PRIOR TO INSTALL AND SHALL NOTIFY PERTINENT PARTIES PRIOR TO ANY WORK PERFORMED IN THESE AREAS. IN ADDITION, CONTRACTOR SHALL BE RESPONSIBLE TO PROVIDE PROPER ACCESS FOR DAMPERS INSTALLED. THE DAMPER FIRE RATING SHALL BE COMPATIBLE WITH THE CEILING/WALL RATING.

    B) LOCATION OF FIRE-RATED CEILINGS AND WALLS ARE AS INDICATED ON THE MECHANICAL DRAWINGS.

    C) FIRE AND/OR SMOKE DAMPER(S) SHALL BE PROVIDED AS REQUIRED BY THE LATEST CALIFORNIA BUILDING CODE.

    D) CONTRACTOR SHALL FURNISH FLUSH MOUNTED FIRE AND/OR SMOKE DAMPERS, SO THAT DAMPER DO NOT EXTEND PASS WALLS, FOR AREAS WITHOUT CEILINGS FOR QUALITY WORKMANSHIP.
10. CONTRACTOR SHALL PERFORM MAINTENANCE ON ALL EXISTING FIRE AND SMOKE/FIRE DAMPERS PER MANUFACTURER'S PROVISIONS. ANY FAILURES OR NON-OPERATING DAMPERS SHALL BE REPLACED AND SHALL CONFORM TO CURRENT CODE REGULATIONS.
11. ALL DUCTWORK PASSING THROUGH FIRE RATED CORRIDORS AND LOBBIES SHALL BE MIN. 26 GAGE SHEET METAL CONSTRUCTION.
12. ALL DUCTWORK, PIPING, CONDUIT, & ETC. PENETRATING FIRE RATED CONSTRUCTION SHALL HAVE APPROVED FIRE STOPPING.
13. UNLESS OTHERWISE NOTED THE CONTRACTOR SHALL BE RESPONSIBLE FOR FURNISHING AND INSTALLING EXTERIOR LOUVERS CALLED OUT HEREIN. COORDINATE SIZE(S) AND LOCATION(S) WITH OTHER TRADES AS NECESSARY PRIOR TO BID.

----- ROOFING -----

1. CONTRACTOR TO REMOVE (E) ROOFING AS REQUIRED AND RE-ROOF OVER NEW EQUIPMENT PAD WITH MEMBRANE TO MATCH (E). NEW ROOF MEMBRANE TO TIE INTO (E) MEMBRANE PER MEMBRANE MANUFACTURER'S REQUIREMENTS.

LEGEND

SYMBOL	ABBR.	DESCRIPTION
	–	SUPPLY AIR RISER
	–	RETURN AIR RISER
	–	EXHAUST AIR RISER
	SAG	SUPPLY AIR GRILLE
	RAG	RETURN AIR GRILLE
	EAG	EXHAUST AIR GRILLE
	SWR	SIDEWALL REGISTER
	(L)	LINED DUCTWORK
	–	FLEXIBLE CONNECTION
	FC	FLEXIBLE CONNECTION
	–	NEW DUCT (SEE PLAN)
	–	EXISTING DUCT (SEE PLAN)
	–	DEMO DUCT (SEE PLAN)
	MVD	MANUAL VOLUME DAMPER
	BDD	BACKDRAFT DAMPER
S/F	SFD	SMOKE / FIRE DAMPER
F	FD	FIRE DAMPER
	DL	DOOR LOUVER
U.C.	UC	UNDERCUT DOOR 3/4"
RS	RS	REFRIGERANT SUCTION LINE
RL	RL	REFRIGERANT LIQUID LINE
CD	CD	CONDENSATE DRAIN
	S.D.	SMOKE DETECTOR
	P.O.C.	POINT OF CONNECTION
	T-STAT	THERMOSTAT
H	H	HUMIDISTAT
TS	TS	TEMPERATURE SENSOR
OS	OS	OVERRIDE SWITCH
PD	PD	PRESSURE DIFFERENTIAL SWITCH
S	S	SWITCH
	O.C.	ON CENTER
	HWR	HOT-WATER RETURN
	HWS	HOT-WATER SUPPLY
	I.D.	INSIDE DIAMETER
	O.D.	OUTSIDE DIAMETER
	W/	WITH
	S/M	SHEET METAL
	S/S	STAINLESS STEEL
	G.C.	GENERAL CONTRACTOR
	VTR	VENT THRU ROOF
	EMS	ENERGY MANAGEMENT SYSTEM
	OBD	OPPOSED BLADE DAMPER
	FSC	FAN SPEED CONTROL
E	E	ITEMS FURNISHED AND INSTALLED BY ELECTRICAL CONTRACTOR AS SPECIFIED ON THE ELECTRICAL CONTRACT DOCUMENTS
M	M	ITEMS FURNISHED AND INSTALLED BY MECHANICAL CONTRACTOR AS SPECIFIED ON THE MECHANICAL CONTRACT DOCUMENTS
EM	EM	ITEMS FURNISHED BY ELECTRICAL CONTRACTOR AND INSTALLED BY MECHANICAL CONTRACTOR.
ME	ME	ITEMS FURNISHED BY MECHANICAL CONTRACTOR AND INSTALLED BY ELECTRICAL CONTRACTOR.
	C.C.	CONTROLS CONTRACTOR
	CBD	COUNTER-BALANCE DAMPER
DS	D.S.	DOOR SWITCH

SHEET INDEX

S.NO.	SHEET No.	SHEET TITLE
1	M-01	MECHANICAL GENERAL NOTE AND LEGEND
2	M-02	MECHANICAL SCHEDULES
3	M-2.0	MECHANICAL BUILDING A DEMOLITION AND REMODEL PLANS
4	M-2.1	MECHANICAL BUILDING C DEMOLITION AND REMODEL PLANS
5	M-2.2	MECHANICAL BUILDING D DEMOLITION AND REMODEL PLANS
6	M-2.3	MECHANICAL BUILDING E DEMOLITION AND REMODEL PLANS
7	M-2.4	MECHANICAL BUILDING F DEMOLITION AND REMODEL PLANS
8	M-2.5	MECHANICAL BUILDING G DEMOLITION AND REMODEL PLANS
9	M-2.6	MECHANICAL BUILDING K DEMOLITION AND REMODEL PLANS
10	M-3.1	MECHANICAL SECTIONS
11	M-4.1	MECHANICAL DETAILS
12	M-4.3	MECHANICAL DETAILS
13	M-4.4	MECHANICAL DETAILS
14	M-5.1	MECHANICAL CONTROLS
15	M-5.2	MECHANICAL CONTROLS
16	M-5.3	MECHANICAL CONTROLS
17	M-5.4	MECHANICAL CONTROLS
18	M-5.5	MECHANICAL CONTROLS
19	M-6.0	TITLE 24 BUILDING A
20	M-6.1	TITLE 24 BUILDING C
21	M-6.2	TITLE 24 BUILDING D
22	M-6.3	TITLE 24 BUILDING E
23	M-6.4	TITLE 24 BUILDING F
24	M-6.5	TITLE 24 BUILDING G
25	M-6.6	TITLE 24 BUILDING K

PIPING, DUCTWORK, AND ELECTRICAL DISTRIBUTION SYSTEM BRACING NOTE

PIPING, DUCTWORK AND ELECTRICAL DISTRIBUTION SYSTEMS SHALL BE BRACED TO COMPLY WITH THE FORCES AND DISPLACEMENTS PRESCRIBED IN ASCE 7-10 SECTION 13.3.3 AS DEFINED IN ASCE 7-10 SECTION 13.6.5.6, 13.6.7. 13.6.8 AND 2016 CBC, SECTIONS 1616A.1.24, 1616A.1.25, AND 1616A.1.26.

THE METHOD OF SHOWING BRACING AND ATTACHMENTS TO THE STRUCTURE FOR THE IDENTIFIED DISTRIBUTION SYSTEM ARE AS NOTED BELOW. WHEN BRACING AND ATTACHMENTS ARE BASED ON A PREAPPROVED INSTALLATION GUIDE (E.G. SMACNA OR OSHPD OPM), COPIES OF THE BRACING SYSTEM INSTALLATION GUIDE OR MANUAL SHALL BE AVAILABLE ON THE JOBSITE PRIOR TO THE START OF AND DURING THE HANGING AND BRACING OF THE DISTRIBUTION SYSTEMS. THE STRUCTURAL ENGINEER OF RECORD SHALL VERIFY THE ADEQUACY OF THE STRUCTURE TO SUPPORT THE HANGER AND BRACE LOADS.

MECHANICAL PIPING (MP), MECHANICAL DUCTS (MD), PLUMBING PIPING (PP), ELECTRICAL DISTRIBUTION SYSTEMS (E):

MPX MD_ PP_ E_ – OPTION 1: DETAILED ON THE APPROVED DRAWINGS WITH PROJECT SPECIFIC NOTES AND DETAILS.

MP_ MD_ PP_ E_ – OPTION 2: SHALL COMPLY WITH THE APPLICABLE DRAWINGS WITH PROJECT SPECIFIC NOTES AND DETAILS.

MP_ MD_ PP_ E_ – OPTION 3: SHALL COMPLY WITH THE SMACNA SEISMIC RESTRAINT MANUAL, OSHPD EDITION (2009), INCLUDING ANY ADDENDA. FASTENERS AND OTHER ATTACHMENTS NOT SPECIFICALLY IDENTIFIED IN THE SMACNA SEISMIC RESTRAINT MANUAL, OSHPD EDITION, ARE DETAILED ON THE APPROVED DRAWINGS WITH PROJECT SPECIFIC NOTES AND DETAILS. THE DETAILS SHALL ACCOUNT FOR THE APPLICABLE SEISMIC HAZARD LEVEL_____ AND THE CONNECTION LEVEL_____ FOR THE PROJECT AND CONDITIONS. .

MEP COMPONENT ANCHORAGE NOTE

ALL MECHANICAL, PLUMBING AND ELECTRICAL COMPONENTS SHALL BE ANCHORED AND INSTALLED PER THE DETAILS ON THE DSA APPROVED CONSTRUCTION DOCUMENTS. WHERE NO DETAIL IS INDICATED, THE FOLLOWING COMPONENTS SHALL BE ANCHORED OR BRACED TO MEET THE FORCE AND DISPLACEMENT REQUIREMENTS PRESCRIBED IN THE 2016 CBC, SECTION 1616A.1.18 THROUGH 1616A.1.26 AND ASCE 7-10 CHAPTER 13, 26 AND 30.

1. ALL PERMANENT EQUIPMENT AND COMPONENTS.
2. TEMPORARY OR MOVABLE EQUIPMENT THAT IS PERMANENTLY ATTACHED (e.g. HARD WIRE) TO THE BUILDING UTILITY SERVICES SUCH AS ELECTRICITY, GAS OR WATER.
3. MOVABLE EQUIPMENT WHICH IS STATIONED IN ONE PLACE FOR MORE THAN 8 HOURS AND HEAVIER THAN 400 POUNDS ARE REQUIRED TO BE ANCHORED WITH TEMPORARY ATTACHMENTS.

THE ATTACHMENT OF THE FOLLOWING MECHANICAL AND ELECTRICAL COMPONENTS SHALL BE POSITIVELY ATTACHED TO THE STRUCTURE, BUT NEED NOT BE DETAILED ON THE PLANS. THE PROJECT INSPECTOR WILL VERIFY THAT THESE ITEMS HAVE BEEN POSITIVELY ATTACHED. THESE COMPONENTS SHALL HAVE FLEXIBLE CONNECTIONS PROVIDED BETWEEN THE COMPONENT AND ASSOCIATED DUCTWORK, PIPING AND CONDUIT.

A. COMPONENTS WEIGHING LESS THAN 400 POUNDS AND HAVE A CENTER OF MASS LOCATED 4 FEET OR LESS ABOVE THE ADJACENT FLOOR OR ROOF LEVEL THAT DIRECTLY SUPPORT THE COMPONENT.
B. COMPONENTS WEIGHING LESS THAN 20 POUNDS, OR IN THE CASE OF DISTRIBUTED SYSTEMS, LESS THAN 5 POUNDS PER FOOT, WHICH ARE SUSPENDED FROM A ROOF OR FLOOR OR HUNG FROM A WALL.

FOR THOSE ELEMENTS THAT DO NOT REQUIRE DETAILS ON THE APPROVED DRAW

VARIABLE AIR VOLUME BOX SCHEDULE

TAG	MFR. & MODEL #	AC UNIT	ROOM	SIZE, IN.		CFM		WEIGHT (LB)	ANCHORAGE DETAIL	REMARKS
				INLET	OUTLET	MAX	MIN			
VAV1 C	CARRIER 35E12	AC1 C	CLASSROOM 103C	12	16"X14"	1,400	350	35	3 S1.0 / 11 M-4.7	1
VAV2 C	CARRIER 35E12	AC1 C	CLASSROOM 104C	12	16"X14"	1,400	350	35	3 S1.0 / 11 M-4.7	1
VAV3 C	CARRIER 35E12	AC1 C	CLASSROOM 105C	12	16"X14"	1,400	350	35	3 S1.0 / 11 M-4.7	1
VAV4 C	CARRIER 35E12	AC1 C	CLASSROOM 112C	12	16"X14"	1,400	350	35	3 S1.0 / 11 M-4.7	1
VAV5 C	CARRIER 35E	AC1 C	CLASSROOM 113C	12	16"X14"	1,400	350	35	3 S1.0 / 11 M-4.7	1
VAV6 C	CARRIER 35E	AC1 C	CLASSROOM 114C	12	16"X14"	1,400	350	35	3 S1.0 / 11 M-4.7	1
VAV1 D	CARRIER 35E	AC1 D	CLASSROOM 103D	12	16"X14"	1,400	350	35	3 S1.0 / 11 M-4.7	1
VAV2 D	CARRIER 35E	AC1 D	CLASSROOM 104D	12	16"X14"	1,400	350	35	3 S1.0 / 11 M-4.7	1
VAV3 D	CARRIER 35E	AC1 D	CLASSROOM 105D	12	16"X14"	1,400	350	35	3 S1.0 / 11 M-4.7	1
VAV4 D	CARRIER 35E	AC1 D	CLASSROOM 112D	12	16"X14"	1,400	350	35	3 S1.0 / 11 M-4.7	1
VAV5 D	CARRIER 35E	AC1 D	CLASSROOM 113D	12	16"X14"	1,400	350	35	3 S1.0 / 11 M-4.7	1
VAV6 D	CARRIER 35E	AC1 D	CLASSROOM 114D	12	16"X14"	1,400	350	35	3 S1.0 / 11 M-4.7	1
VAV1 F	CARRIER 35E	AC1 F	CLASSROOM 103F	12	16"X14"	1,400	350	35	3 S1.0 / 11 M-4.7	1
VAV2 F	CARRIER 35E	AC1 F	CLASSROOM 104F	12	16"X14"	1,400	350	35	3 S1.0 / 11 M-4.7	1
VAV3 F	CARRIER 35E	AC1 F	CLASSROOM 105F	12	16"X14"	1,400	350	35	3 S1.0 / 11 M-4.7	1
VAV4 F	CARRIER 35E	AC1 F	CLASSROOM 109F	12	16"X14"	1,400	350	35	3 S1.0 / 11 M-4.7	1
VAV5 F	CARRIER 35E	AC1 F	CLASSROOM 110F	12	16"X14"	1,400	350	35	3 S1.0 / 11 M-4.7	1
VAV6 F	CARRIER 35E	AC1 F	CLASSROOM 111F	12	16"X14"	1,400	350	35	3 S1.0 / 11 M-4.7	1
VAV1 G	CARRIER 35E	AC1 G	CLASSROOM 108G	12	16"X14"	1,350	350	35	3 S1.0 / 11 M-4.7	1
VAV2 G	CARRIER 35E	AC1 G	CLASSROOM 107G	12	16"X14"	1,275	350	35	3 S1.0 / 11 M-4.7	1
VAV3 G	CARRIER 35E	AC1 G	CLASSROOM 108G	12	16"X14"	1,275	350	35	3 S1.0 / 11 M-4.7	1
VAV4 G	CARRIER 35E	AC1 G	SPEECHROOM 101G	6	12"X8"	250	50	23	3 S1.0 / 11 M-4.7	1
VAV1 K	CARRIER 35E	AC1 K	CLASSROOM 115K	12	16"X14"	2,000	400	35	3 S1.0 / 11 M-4.7	1
VAV2 K	CARRIER 35E	AC1 K	CLASSROOM 107K	14	16"X14"	2,800	560	43	3 S1.0 / 11 M-4.7	1
VAV3 K	CARRIER 35E	AC1 K	CLASSROOM 101K	12	16"X14"	2,000	400	35	3 S1.0 / 11 M-4.7	1

REMARKS

1. PROVIDE CARRIER ZS PRO SPACE SENSOR.

PACKAGED GAS/ELECTRIC A/C UNIT SCHEDULE

SYMBOL	MAKE	MODEL	TYPE	AC TONNAGE	COOLING CAPACITY		HEAT. INPUT	OSA	EER	SUPPLY FAN			ELECTRICAL				UNIT WT	ANCHORAGE DETAIL	CONTROL DETAIL	REMARKS
					SENSIBLE(MBH)	TOTAL (MBH)	CAP. (MBH)	CFM		ESP	CFM	BHP	VOLTS	PH	MCA	MOCP	(LBS)			
AC1 A	CARRIER	48VLNC60	CV	5T	57.08	42.14	90	400	–	0.6	2,000	0.97	208	1	38.3	60	460	6 M-4.7	1 M-5.7	2, 3, 4, 5
AC1 C	CARRIER	48LCDB24A7A5	VAV	20T	187.84	252.02	176	2,100	10.94	1.25	7,500	9.83	208	3	130.8	150	2650	10 M-4.7	2 M-5.7	1, 2, 4, 5
AC1 D	CARRIER	48LCDB24A6A5	VAV	20T	194.22	254.59	176	2,100	10.94	1.25	7,500	9.83	208	3	130.8	150	2650	9 M-4.7	2 M-5.7	1, 2, 4, 5, 8
AC1 F	CARRIER	48LCDB24A6A5	VAV	20T	194.22	254.59	176	2,100	10.94	1.25	7,500	9.83	208	3	130.8	150	2650	10 M-4.7	2 M-5.7	1, 2, 4, 5
AC1 G	CARRIER	48LCDB12A2A5	VAV	10T	90.52	120.45	144	1,100	13.0	1.25	3,750	2.62	208	3	54	60	2025	13 M-4.7	2 M-5.7	2, 4, 5, 6, 7
AC1 K	CARRIER	48LCDB20A7A5	VAV	17.5T	153.24	203.46	176	1,360	11.2	1.25	6,575	7.94	208	3	104.6	125	2500	10 M-4.7	2 M-5.7	1, 2, 4, 5

REMARKS:

1. FACTORY PROVIDE NON-MODULATING POWER EXHAUST HORIZONTAL APPLICATION MOUNTING RETURN AIR DUCT WITH DRY BULB ECONOMIZER. POWER EXHAUST POWERED FROM UNIT.
2. PROVIDE HORIZONTAL SUPPLY AND RETURN.
3. FRESH AIR HOOD
4. 2" FILTERS (MERV 8)
5. TIME GUARD II CONTROL CIRCUIT
6. CONTRACTOR TO PROVIDE M.W. SAUSSE & CO., INC. 14" HIGH AC CURB AND MANUFACTURER STAMPED STRUCTURAL CALCULATION. (SEE M-4.3).
7. PROVIDE CANFAB MODULATING POWER EXHAUST HORIZONTAL APPLICATION MOUNTING AC UNIT WITH DRY BULB ECONOMIZER. PROVIDE SEPARATE POWER FOR CANFAN MODULATING POWER (MCA- 11.38 / MOCP - 20.48).
8. CONTRACTOR TO PROVIDE M.W. SAUSSE & CO., INC. CUSTOM 30" HIGH AC CURB WITH RETURN DUCT THRU CURB AND MANUFACTURER STAMPED STRUCTURAL CALCULATION. (SEE M-4.4).

NOTES

1. CONTRACTOR TO VERIFY FINAL UNIT LOCATIONS PRIOR TO INSTALLATION.
2. ELECTRICAL SHALL PROVIDE ONE DISCONNECT SWITCH AND SINGLE FEED FOR UNIT AND POWER EXHAUST.
3. POWER EXHAUST FLA AND MCA INCLUDED IN SCHEDULE EXCEPT AC1/G. SEE REMARK 7.

AIR DISTRIBUTION SCHEDULE

SYM.	MFR. & MODEL #	NECK SIZE	CFM RANGE	MAX. NECK VELOCITY	MAX. N.C.	S.P. DROP	TYPE	DAMPER	REMARKS
– SD-1	KRUEGER 1240	8"x8" 10"x10" 12"x12" 14"x14" 16"x16" 18"x18"	0-170 171-270 271-390 391-540 541-700 701-900	400	30	.06	MODULAR	NONE	FRAME 23 FOR T-BAR
– RG-3	KRUEGER EGC5	48"X24"	0-3600	400	30	.03	EGG-CRATE	NONE	–

LEGEND

400 / SD-1 — CFM / AIR DISTRIBUTION DEVICE

SD	SUPPLY DIFFUSER
RG	RETURN GRILLE
TG	TRANSFER GRILLE
EG	EXHAUST GRILLE

ZONE AND BYPASS DAMPER SCHEDULE

SYM	MFR & MODEL #	AC UNIT	AREA SERVICED	CFM		MIN. S.P.	INLET SIZE	WT	REMARKS
				MAX.	MIN.				
ZD 1	CARRIER 35E	ACB 1	RECEPTION/WAITING 101/102	1,400	350	0.05	16"ø	47	1
ZD 2	CARRIER 35E	ACB 1	CONFERENCE 106	1,400	350	0.05	16"ø	47	1
ZD 3	CARRIER 35E	ACB 1	OFFICE 104	1,400	350	0.05	16"ø	47	1
ZD 4	CARRIER 35E	ACB 1	OFFICE 103	1,400	350	0.05	16"ø	47	1
BD 1	CARRIER	ACB 1	SEE PLAN	1,400	350	0.05	16"ø	47	2

1. PROVIDE OPN-VVTZC ZONE DAMPER CONTROLLER
2. PROVIDE CARRIER BYPASS DAMPER CONTROLLER

WLC ARCHITECTS
CLIENT FOCUSED • PASSION DRIVEN
SOUTHERN CALIFORNIA
8163 ROCHESTER AVENUE, SUITE 100
RANCHO CUCAMONGA
CALIFORNIA 91730-0729
TEL: 909-987-0909
www.wlcarchitects.com

LONGFELLOW ELEMENTARY SCHOOL HVAC REPLACEMENT

COMPTON UNIFIED SCHOOL DISTRICT
1101 S DWIGHT AVE.
COMPTON, CA 90220

LICENSED ARCHITECT — MARK GRAHAM C-26046 03-31-19 — STATE OF CALIFORNIA

REGISTERED PROFESSIONAL ENGINEER — RAJEEV BANERJEE No. M29253, Exp. 6/30/19 — MECHANICAL — STATE OF CALIFORNIA

CONSULTANT

IDENTIFICATION STAMP
DIV. OF THE STATE ARCHITECT
OFFICE OF REGULATION SERVICES
APPL 03-118423
AC — FLS — SS — EY
DATE MAR 06 2018
FILE: 19-23

NO	DATE	BY	DESCRIPTION
1			REVISIONS

DRAWN: KC | CHECKED:
DATE: 3/6/2018 | SCALE:
PROJECT NUMBER: 570064

MECHANICAL SCHEDULES

DRAWING NUMBER: M-02

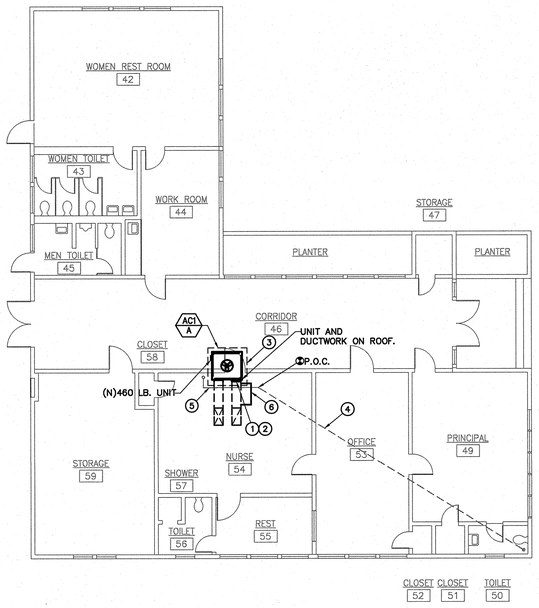

NORTH

BUILDING A - REMODEL FLOOR PLAN | 1/8" = 1'-0" | 1

CONSTRUCTION KEY NOTES:

1. CONTRACTOR TO PROVIDE FLEX. DUCT BETWEEN NEW AC UNIT AND EXISTIGN DUCTWORK. PROVIDE ALL DUCT TRANSITION AS REQUIRED TO CONNECT EXISTING DUCTWORK.
2. CONTRACTOR TO PROVIDE EXTENSION ON GAS PIPING AND CONDENSATE AS REQUIRED AND CONNECT EXISTING GAS AND CONDENSATE DRAIN TO NEW AC UNITS. PROVIDE A NEW VENTED P TRAP IF NECESSARY.
3. EXISTING EQUIPMENT PLATFORM. SEE STRUCTURAL SHEET DETAIL #2/S1.0 AND #6/M-4.1.
4. PARTIAL EXISTING CONDENSATE DRAIN TO REMAIN.
5. NEW CONDENSATE DRAIN.
6. NEW O.S.A. HOOD TO BE PROVIDED.

CONSTRUCTION NOTES:

1. FRESH AIR INTAKE(S) SHALL BE 10'-0"(MIN.) AWAY OR 3'-0" (MIN.) BELOW ANY EXHAUST OUTLET, PLUMBING VENT, OR FLUE.

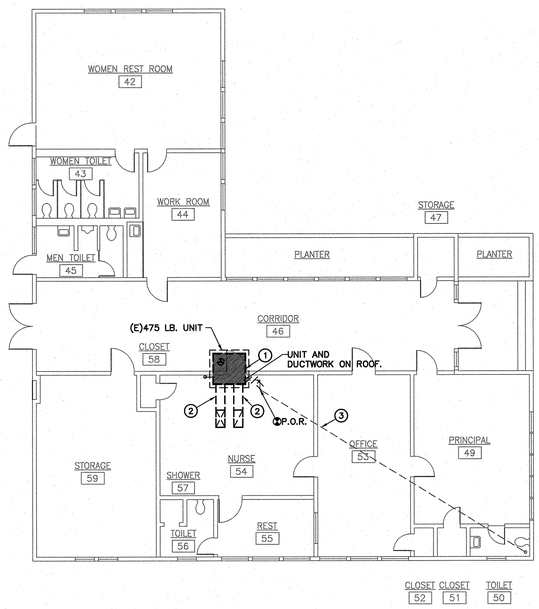

NORTH

BUILDING A - DEMOLITION FLOOR PLAN | 1/8" = 1'-0" | 2

DEMOLITION KEY NOTES:

1. EXISTING AC UNIT AND ALL RELATED ACCESSORIES TO BE REMOVED AND WITH NEW. EXISTING EQUIPMENT FLATFORM TO REMAIN.
2. EXISTING SUPPLY AND RETURN DUCTWORK TO REMAIN.
3. PARTIAL EXISTING CONDENSATE DRAIN TO REMAIN.

DEMOLITION NOTES:

1. OWNER SHALL HAVE FIRST RIGHT OF REFUSAL ON ALL ITEMS TO BE REMOVED. CONTRACTOR SHALL VERIFY ALL SUCH ITEMS WITH OWNER PRIOR TO REMOVAL. ALL ITEMS NOT REFUSED BY OWNER SHALL BE REMOVED INTACT AND FULLY FUNCTIONAL BY CONTRACTOR AND RETURNED TO OWNER. ALL ITEMS REFUSED BY OWNER SHALL BE PROPERLY DISPOSED OF BY CONTRACTOR.
2. PLUMBING CONTRACTOR SHALL DISCONNECT EXISTING GAS AND CONDENSATE DRAIN PIPES FROM MECHANICAL EQUIPMENT TO BE REMOVED AND REPLACED — AS REQUIRED FOR NEW CONNECTION TO NEW AC UNIT.
3. CONTRACTOR SHALL RE-USE EXISTING OPENINGS IN WALLS AND ROOF. COORDINATE WITH OTHER TRADES AS NECESSARY.
4. GENERAL CONTRACTOR SHALL PATCH ALL OPENINGS IN WALLS, ROOF, ETC. THAT WILL NOT BE REUSED FOR FUTURE WORK. COORDINATE AS NECESSARY WITH OTHER TRADES.
5. PRIOR TO ANY WORK BEING DONE CONTRACTOR SHALL MAKE A CAREFUL EVALUATION OF THE EXISTING CONDITIONS AND VERIFY ALL METHODS OF REMOVAL AND INSTALLATION OF MECHANICAL EQUIPMENT.
6. CONTRACTOR SHALL COORDINATE ALL DEMOLITION WORK WITH THE WORK OF ALL OTHER TRADES
7. PATCH ROOF AS NECESSARY. PATCH FLASHINGS AS NECESSARY.

WLC ARCHITECTS
CLIENT FOCUSED • PASSION DRIVEN
SOUTHERN CALIFORNIA
8163 ROCHESTER AVENUE, SUITE 100
RANCHO CUCAMONGA
CALIFORNIA 91730-0729
TEL: 909-987-0909
www.wlcarchitects.com

LONGFELLOW ELEMENTARY SCHOOL HVAC REPLACEMENT

COMPTON UNIFIED SCHOOL DISTRICT
1101 S DWIGHT AVE.
COMPTON, CA 90220

LICENSED ARCHITECT — MARC GRAHAM — C-26046 — 03-31-19 — STATE OF CALIFORNIA
REGISTERED PROFESSIONAL ENGINEER — BRIAN BAKER — No. M29253 — Exp. 6/30/19 — MECHANICAL — STATE OF CALIFORNIA

CONSULTANT

IDENTIFICATION STAMP
DIV. OF THE STATE ARCHITECT
OFFICE OF REGULATION SERVICES
APPL 03-118423
AC — FLS — SS EY
DATE MAR 01 2019
R.E.: 19-23

NO	DATE	BY	DESCRIPTION
1			REVISIONS

DRAWN: KC | CHECKED:
DATE: 3/6/2018 | SCALE:
PROJECT NUMBER: 570064

BUILDING A DEMO AND REMODEL FLOOR PLANS

DRAWING NUMBER: M-2.0

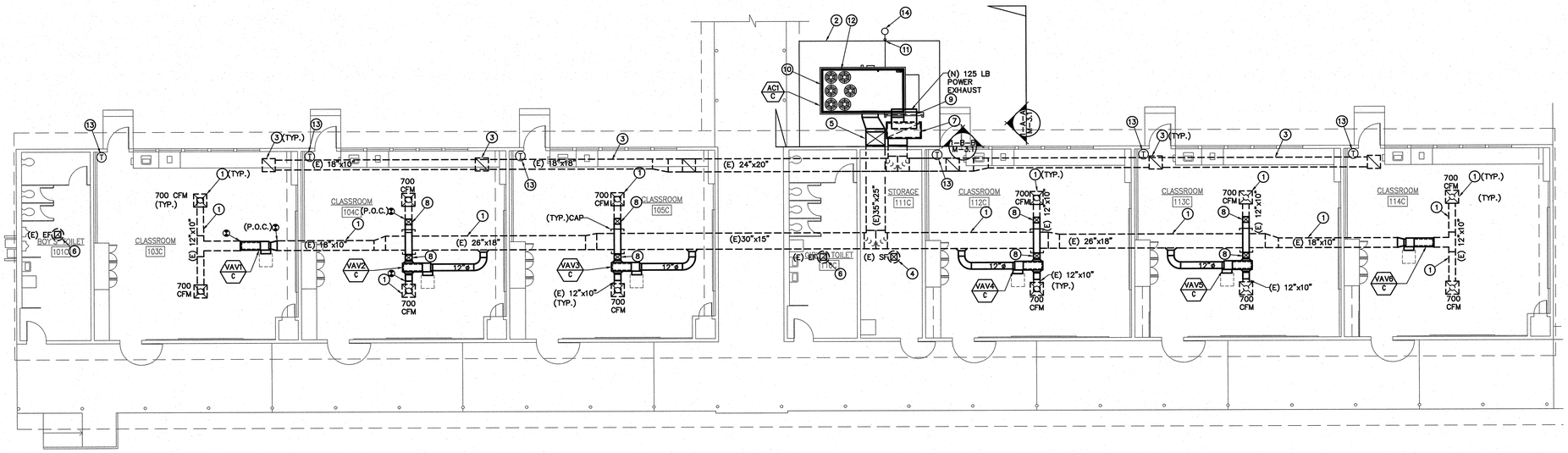

CONSTRUCTION KEY NOTES:

1. EXISTING MAIN SUPPLY DUCTWORK AND SUPPLY AIR DIFFUSERS TO REMAIN. SEE SHEET #2,#3, AND #4/M-4.1 FOR CEILING DIFFUSER AND DUCT SUPPORT DETAIL.
2. NEW FENCE AND CONCRETE PAD.
3. EXISTING MAIN RETURN DUCT AND GRILLES TO REMAIN SEE SHEET #2,#3, AND #4/M-4.1 FOR CEILING DIFFUSER AND DUCT SUPPORT DETAIL.
4. EXISTING SUPPLY FAN AND DUCTWORK TO REMAIN.
5. NEW 35"X25"(L) SUPPLLY AIR DUCT. 40"X28" SHEET METAL SIZES. SEE STRUCTURAL DETAIL SHEET #1/S2.1.
6. EXISTING EXHAUST FAN AND DUCTWORK TO REMAIN.
7. NEW 60"X26"(L) RETURN AIR DUCT. 64"X30" SHEET METAL SIZES. SEE STRUCTURAL DETAIL SHEET #1/S2.1.
8. CONTRACTOR TO OFFSET NEW (W) 12"X10" DUCT ABOVE MAIN SUPPLY DUCT.
9. POWER EXHAUST MOUNTED ON THE NEW RETURN DUCT. SEE STRUCTURAL DETAIL SHEET #1/S2.1.
10. NEW 20 TON AC UNIT WILL BE ON CONCRETE PAD. SEE DETAIL SHEET # 10/M-4.1 FOR PAD.
11. 3/4" CONDENSATE DRAIN TO DRY WELL. PROVIDE NEW VENTED P-TRAP IF NECESSARY.
12. CONTRACTOR TO PROVIDE EXTENSION ON GAS PIPING AS REQUIRED TO RECONNECT EXISTING GAS PIPING TO NEW AC UNIT.
13. ELECTRONIC EMS THERMOSTAT MOUNT AT 48" A.F.F. SEE DETAIL SHEET #7/M-4.1 FOR A/C CONTROL.
14. NEW DRY WELL. SEE DETAIL SHEET #5/M-4.1.

CONSTRUCTION NOTES:

1. CONTRACTOR SHALL COORDINATE WORK WITH OTHER TRADES AS NECESSARY PRIOR TO INSTALLATION.
2. CONTRACTOR SHALL MAINTAIN PROPER CLEARANCES FROM ALL ELECTRICAL EQUIPMENT AND SERVICE CLEARANCES FOR MECHANICAL EQUIPMENT.
4. FRESH AIR INTAKES SHALL BE 10'-0" MIN. AWAY FROM ALL EXHAUST OUTLETS, PLUMBING VENTS, AND FLUES.
5. CONTRACTOR SHALL COORDINATE EXACT EQUIPMENT PAD SIZES AND LOCATIONS WITH OTHER TRADES PRIOR TO INSTALLATION.
6. MAINTAIN MANUFACTURER MIN. CLEARANCES ON ALL AC UNITS.
7. BEFORE BIDDING ON THIS WORK, THE CONTRACTOR SHALL MAKE A CAREFUL EXAMINATION OF THE PREMISES, EXISTING EQUIPMENT AND SERVICES. HE SHALL DEFINITELY DETERMINE IN ADVANCE, THE METHODS OF INSTALLING AND CONNECTING THE NEW EQUIPMENT, DUCTWORK, AND PIPING THE MEANS TO BE PROVIDED FOR GETTING THE EQUIPMENT AND MATERIALS INTO PLACE AND SHALL MAKE HIMSELF THOROUGHLY FAMILIAR WITH ALL OF THE REQUIREMENTS OF THE PROJECT. FAILURE TO VSIT THE SITE WLL IN NO WAY RELIEVE THE SUCCESSFUL CONTRACTOR OF THE NECESSITY OF FURNISHING ANY MATERIAL OR PERFORMING ANY WORK THAT MAY BE REQUIRED TO COMPLETE THE WORK IN ACCORDANCE WITH THE DRAWINGS AND SPECIFICATIONS. THIS ADDITIONAL WORK SHALL BE PERFORMED WITHOUT ADDITIONAL COST TO THE OWNER.
8. BEFORE COMMENCEMENT OF WORK, THE CONTRACTOR SHALL VERIFY THE EXACT LOCATIONS AND DIMENSIONS OF ALL EXISTING EQUIPMENT AND ELECTRICAL SERVICES IN THE AREA OF CONSTRUCTION AND NOTIFY THE ENGINEER OF ANY DISCREPANCIES.

NORTH

BUILDING C - REMODEL FLOOR PLAN | 1/8" = 1'-0" | 1

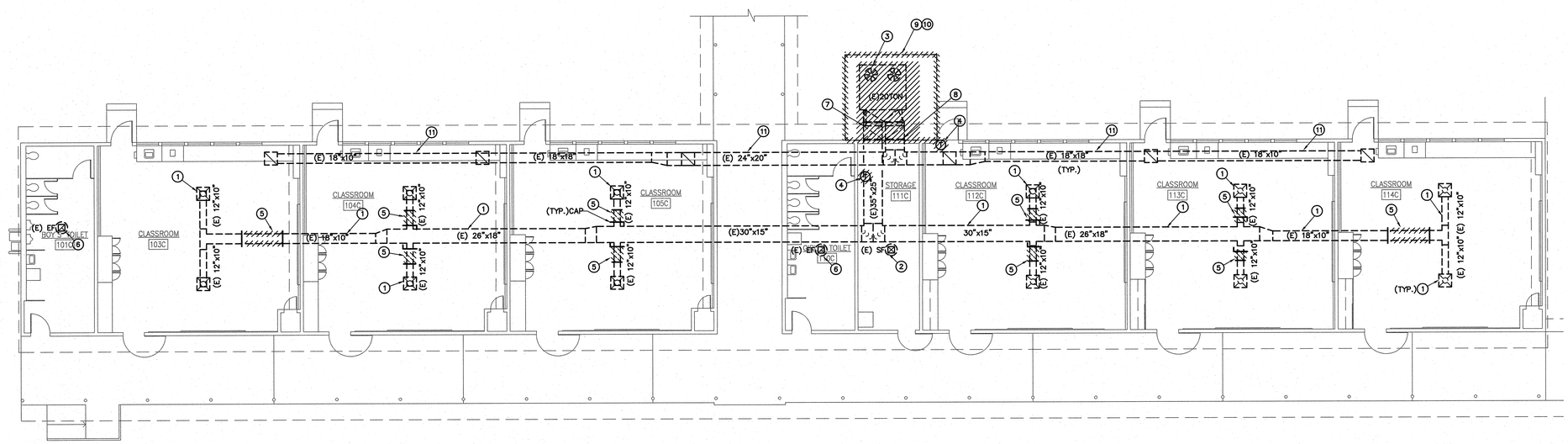

DEMOLITION KEY NOTES:

1. EXISTING MAIN SUPPLY DUCTWORK AND SUPPLY AIR DIFFUSERS TO REMAIN.
2. EXISTING SUPPLY FAN AND DUCTWORK TO REMAIN.
3. EXISTING AC UNIT. AC UNIT CURB AND RELATED ACCESSORIES TO BE REMOVED AND REPLACED WITH NEW AC UNIT.
4. EXISTING T-STAT TO BE REMOVED.
5. PARTIAL EXISTING SUPPLY AIR DUCT AND EXISTING MANUAL VOLUME DAMPER TO BE REMOVED. CAP UNUSED DUCT OPENING.
6. EXISTING EXHAUST FAN AND DUCTWORK TO REMAIN.
7. EXISTING 30"X25" MAIN SUPPLY AIR DUCT TO BE REMOVED AND REPLACED.
8. EXISTING 35"X25" RETURN DUCT TO BE REMOVED AND REPLACED.
9. EXISTING CONCRETE PAD TO BE REMOVED AND REPLACED WITH A NEW PAD.
10. EXISTING FENCE TO BE REMOVED AND REPLACED WITH A NEW FENCE AT A NEW LOCATION.
11. EXISTING MAIN RETURN DUCT AND AIR GRILLES TO REMAIN.

GENERAL DEMOLITION NOTES

1. OWNER SHALL HAVE FIRST RIGHT OF REFUSAL ON ALL ITEMS TO BE REMOVED. CONTRACTOR SHALL VERIFY ALL SUCH ITEMS WITH OWNER PRIOR TO REMOVAL. ALL ITEMS NOT REFUSED BY OWNER SHALL BE REMOVED INTACT AND FULLY FUNCTIONAL BY REFUSED BY OWNER SHALL BE PROPERLY DISPOSED OF BY CONTRACTOR.
2. CONTRACTOR SHALL RE-USE EXISTING OPENINGS IN WALLS AND ROOF WHEREVER POSSIBLE. COORDINATE WITH OTHER TRADES AS NECESSARY. GENERAL CONTRACTOR SHALL MODIFY OPENING AS REQUIRED TO ACCOMODATE NEW MECHANICAL DEVICE.
3. GENERAL CONTRACTOR SHALL PATCH ALL OPENINGS IN WALLS, ROOF, ETC. THAT WILL NOT BE REUSED FOR FUTURE WORK. COORDINATE AS NECESSARY WITH OTHER TRADES.
4. CONTRACTOR SHALL COORDINATE WITH OWNER PRIOR TO ANY WORK BEING DONE STORAGE OF MECHANICAL EQUIPMENT TO BE RE-USED DURING CONSTRUCTION.
5. PRIOR TO ANY WORK BEING DONE CONTRACTOR SHALL MAKE A CAREFUL EVALUATION OF THE EXISTING CONDITIONS AND VERIFY ALL METHODS OF REMOVAL AND INSTALLATION OF MECHANICAL EQUIPMENT.
6. CONTRACTOR SHALL COORDINATE ALL DEMOLITION WORK WITH THE WORK OF ALL OTHER TRADES.
7. CONTRACTOR SHALL CLEAN ALL AIR DEVICES AND DUCTWORK TO REMAIN PER SPECIFICATIONS.
8. CONTRACTOR SHALL CLEAN ALL EXISTING DUCTWORK INCLUDING LINED DUCTWORK TO REMAIN PER SPECIFICATIONS. PRIOR TO BID AND BEFORE COMMENCEMENT OF ANY WORK ALL EXISTING DUCTWORK TO REMAIN SHALL BE CONFIRMED ON SITE.

NORTH

BUILDING C - DEMOLITION FLOOR PLAN | 1/8" = 1'-0" | 2

WLC ARCHITECTS
CLIENT FOCUSED • PASSION DRIVEN

SOUTHERN CALIFORNIA
8163 ROCHESTER AVENUE, SUITE 100
RANCHO CUCAMONGA
CALIFORNIA 91730-0729

TEL: 909-987-0909
www.wlcarchitects.com

LONGFELLOW ELEMENTARY SCHOOL HVAC REPLACEMENT

COMPTON UNIFIED SCHOOL DISTRICT
1101 S DWIGHT AVE.
COMPTON, CA 90220

MARK GRAHAM C-26046 03-31-19 — LICENSED ARCHITECT — STATE OF CALIFORNIA

ABBY BANDERAS No. M29253 Exp. 6/30/19 — REGISTERED PROFESSIONAL ENGINEER — MECHANICAL — STATE OF CALIFORNIA

CONSULTANT

IDENTIFICATION STAMP
DIV. OF THE STATE ARCHITECT
OFFICE OF REGULATION SERVICES
APPL 03-118423
AC — FLS — SS — EY
DATE MAR 0 6 2018
FILE: 19-23

NO	DATE	BY	DESCRIPTION
			REVISIONS

DRAWN: KC	CHECKED:
DATE: 3/6/2018	SCALE:
PROJECT NUMBER: 570064	

BUILDING C DEMO AND REMODEL FLOOR PLANS

DRAWING NUMBER: M-2.1

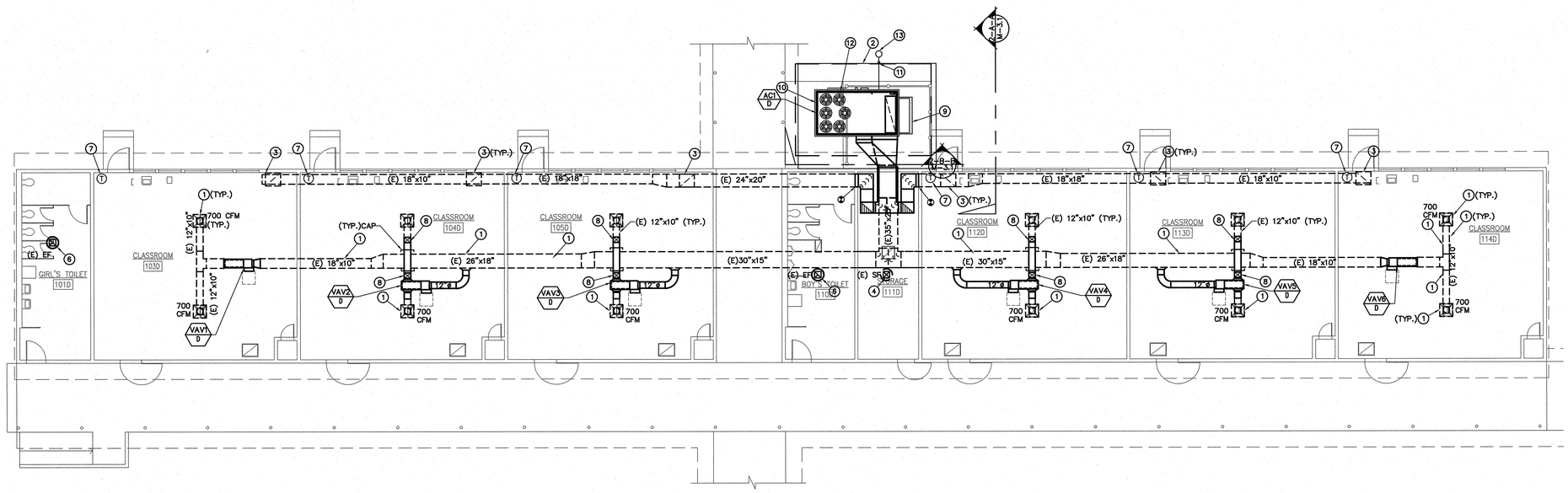

CONSTRUCTION KEY NOTES:

1. EXISTING MAIN SUPPLY DUCTWORK AND SUPPLY AIR DIFFUSERS TO REMAIN.SEE SHEET #2,#3, AND #4/M-4.1 FOR CEILING DIFFUSER AND DUCT SUPPORT DETAIL.
2. NEW FENCE AND CONCRETE PAD.
3. EXISTING MAIN RETURN DUCT AND GRILLES TO REMAIN.SEE SHEET #2,#3, AND #4/M-4.1 FOR CEILING DIFFUSER AND DUCT SUPPORT DETAIL.
4. EXISTING SUPPLY FAN AND DUCTWORK TO REMAIN.
5. CONTRACTOR TO USE M.W. SAUSSE & CO.,INC CURB AND CALCS. SEE SHEET M-4.4.
6. EXISTING EXHAUST FAN AND DUCTWORK TO REMAIN.
7. ELECTRONIC EMS THERMOSTAT MOUNT AT 48" A.F.F. SEE DETAIL SHEET #7/M-4.1 FOR A/C CONTROL.
8. CONTRACTOR TO OFFSET NEW (W) 12"X10" DUCT ABOVE MAIN SUPPLY DUCT.
9. POWER EXHAUST MOUNTED ON THE AC UNIT.
10. NEW AC UNIT AND CURB WILL BE ON CONCRETE PAD. SEE DETAIL SHEET # 9/M-4.1 FOR PAD.
11. ¾" CONDENSATE DRAIN TO DRYWELL. PROVIDE NEW VENTED P-TRAP IF NECESSARY.
12. CONTRACTOR TO PROVIDE EXTENSION ON GAS PIPING AS REQUIRED TO RECONNECT EXISTING GAS PIPING TO NEW AC UNIT.
12. NEW DRY WELL. SEE DETAIL SHEET #5/M-4.1.

CONSTRUCTION NOTES:

1. CONTRACTOR SHALL COORDINATE WORK WITH OTHER TRADES AS NECESSARY PRIOR TO INSTALLATION.
2. CONTRACTOR SHALL MAINTAIN PROPER CLEARANCES FROM ALL ELECTRICAL EQUIPMENT AND SERVICE CLEARANCES FOR MECHANICAL EQUIPMENT.
3. FRESH AIR INTAKES SHALL BE 10'-0" MIN. AWAY FROM ALL EXHAUST OUTLETS, PLUMBING VENTS, AND FLUES.
4. CONTRACTOR SHALL COORDINATE EXACT EQUIPMENT PAD SIZES AND LOCATIONS WITH OTHER TRADES PRIOR TO INSTALLATION.
5. MAINTAIN MANUFACTURER MIN. CLEARANCES ON ALL AC UNITS.
6. BEFORE BIDDING ON THIS WORK, THE CONTRACTOR SHALL MAKE A CAREFUL EXAMINATION OF THE PREMISES, EXISTING EQUIPMENT AND SERVICES. HE SHALL DEFINITELY DETERMINE IN ADVANCE, THE METHODS OF INSTALLING AND CONNECTING THE NEW EQUIPMENT, DUCTWORK, AND PIPING THE MEANS TO BE PROVIDED FOR GETTING THE EQUIPMENT AND MATERIALS INTO PLACE AND SHALL MAKE HIMSELF THOROUGHLY FAMILIAR WITH ALL OF THE REQUIREMENTS OF THE PROJECT. FAILURE TO VISIT THE SITE WILL IN NO WAY RELIEVE THE SUCCESSFUL CONTRACTOR OF THE NECESSITY OF FURNISHING ANY MATERIAL OR PERFORMING ANY WORK THAT MAY BE REQUIRED TO COMPLETE THE WORK IN ACCORDANCE WITH THE DRAWINGS AND SPECIFICATIONS. THIS ADDITIONAL WORK SHALL BE PERFORMED WITHOUT ADDITIONAL COST TO THE OWNER.
7. BEFORE COMMENCEMENT OF WORK, THE CONTRACTOR SHALL VERIFY THE EXACT LOCATIONS AND DIMENSIONS OF ALL EXISTING EQUIPMENT AND ELECTRICAL SERVICES IN THE AREA OF CONSTRUCTION AND NOTIFY THE ENGINEER OF ANY DISCREPANCIES.
8. ALL NEW EXPOSED SHEET METAL DUCTWORK, SHEET METAL CURB / PLATFORM AND DUCT SUPPORT SHALL BE PREPARED AND PAINTED PER DISTRICT STANDARDS.

NORTH

BUILDING D - REMODEL FLOOR PLAN | 1/8" = 1'-0" | 1

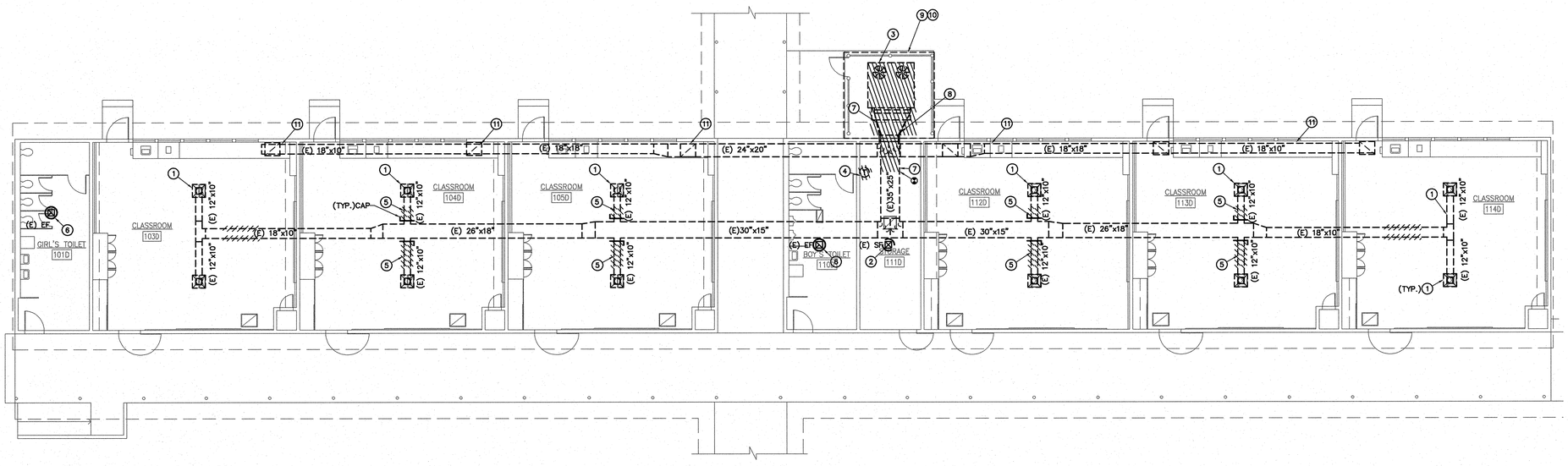

DEMOLITION KEY NOTES:

1. EXISTING MAIN SUPPLY DUCTWORK AND SUPPLY AIR DIFFUSERS TO REMAIN.
2. EXISTING SUPPLY FAN AND DUCTWORK TO REMAIN.
3. EXISTING AC UNIT, AC UNIT CURB AND RELATED ACCESSORIES TO BE REMOVED AND REPLACED WITH NEW AC UNIT.
4. EXISTING T-STAT TO BE REMOVED.
5. PARTIAL EXISTING SUPPLY AIR DUCT AND EXISTING MANUAL VOLUME DAMPER TO BE REMOVED. CAP UNUSED DUCT OPENING.
6. EXISTING EXHAUST FAN AND DUCTWORK TO REMAIN.
7. EXISTING 30"X25" MAIN SUPPLY AIR DUCT TO BE REMOVED AND REPLACED.
8. EXISTING 35"X25" RETURN DUCT TO BE REMOVED AND REPLACED.
9. EXISTING CONCRETE PAD TO BE REMOVED AND REPLACED WITH A NEW PAD.
10. EXISTING FENCE TO BE REMOVED AND REPLACED WITH A NEW FENCE AT A NEW LOCATION.
11. EXISTING MAIN RETURN DUCT AND AIR GRILLES TO REMAIN.

GENERAL DEMOLITION NOTES

1. OWNER SHALL HAVE FIRST RIGHT OF REFUSAL ON ALL ITEMS TO BE REMOVED.CONTRACTOR SHALL VERIFY ALL SUCH ITEMS WITH OWNER PRIOR TO REMOVAL. ALL ITEMS NOT REFUSED BY OWNER SHALL BE REMOVED INTACT AND FULLY FUNCTIONAL BY REFUSED BY OWNER SHALL BE PROPERLY DISPOSED OF BY CONTRACTOR.
2. CONTRACTOR SHALL RE-USE EXISTING OPENINGS IN WALLS AND ROOF WHEREVER POSSIBLE. COORDINATE WITH OTHER TRADES AS NECESSARY. GENERAL CONTRACTOR SHALL MODIFY OPENING AS REQUIRED TO ACCOMMODATE NEW MECHANICAL DEVICE.
3. GENERAL CONTRACTOR SHALL PATCH ALL OPENINGS IN WALLS, ROOF, ETC. THAT WILL NOT BE REUSED FOR FUTURE WORK. COORDINATE AS NECESSARY WITH OTHER TRADES.
4. CONTRACTOR SHALL COORDINATE WITH OWNER PRIOR TO ANY WORK BEING DONE STORAGE OF MECHANICAL EQUIPMENT TO BE RE-USED DURING CONSTRUCTION.
5. PRIOR TO ANY WORK BEING DONE CONTRACTOR SHALL MAKE A CAREFUL EVALUATION OF THE EXISTING CONDITIONS AND VERIFY ALL METHODS OF REMOVAL AND INSTALLATION OF MECHANICAL EQUIPMENT.
6. CONTRACTOR SHALL COORDINATE ALL DEMOLITION WORK WITH THE WORK OF ALL OTHER TRADES.
7. CONTRACTOR SHALL CLEAN ALL AIR DEVICES AND DUCTWORK TO REMAIN PER SPECIFICATIONS.
8. CONTRACTOR SHALL CLEAN ALL EXISTING DUCTWORK INCLUDING LINED DUCTWORK TO REMAIN PER SPECIFICATIONS. PRIOR TO BID AND BEFORE COMMENCEMENT OF ANY WORK ALL EXISTING DUCTWORK TO REMAIN SHALL BE CONFIRMED ON SITE.

NORTH

BUILDING D - DEMOLITION FLOOR PLAN | 1/8" = 1'-0" | 2

WLC ARCHITECTS
CLIENT FOCUSED • PASSION DRIVEN

SOUTHERN CALIFORNIA
8163 ROCHESTER AVENUE, SUITE 100
RANCHO CUCAMONGA
CALIFORNIA 91730-0729
TEL: 909-987-0909
www.wlcarchitects.com

LONGFELLOW ELEMENTARY SCHOOL HVAC REPLACEMENT

COMPTON UNIFIED SCHOOL DISTRICT
1101 S DWIGHT AVE.
COMPTON, CA 90220

LICENSED ARCHITECT — MARK GRAHAM — C-26046 — 03-31-19 — STATE OF CALIFORNIA

REGISTERED PROFESSIONAL ENGINEER — BRIAN BAMERAS — No. M29253 — Exp. 6/30/19 — MECHANICAL — STATE OF CALIFORNIA

CONSULTANT

FILE: 19-23

IDENTIFICATION STAMP
DIV. OF THE STATE ARCHITECT
OFFICE OF REGULATION SERVICES
APPL 03-118423
AC ___ FLS ___ SS IEY
DATE MAR 0 8 2018

NO	DATE	BY	DESCRIPTION
1			REVISIONS

DRAWN: KC	CHECKED:
DATE: 3/6/2018	SCALE:
PROJECT NUMBER: 570064	

BUILDING D DEMO AND REMODEL FLOOR PLANS

DRAWING NUMBER: M-2.2

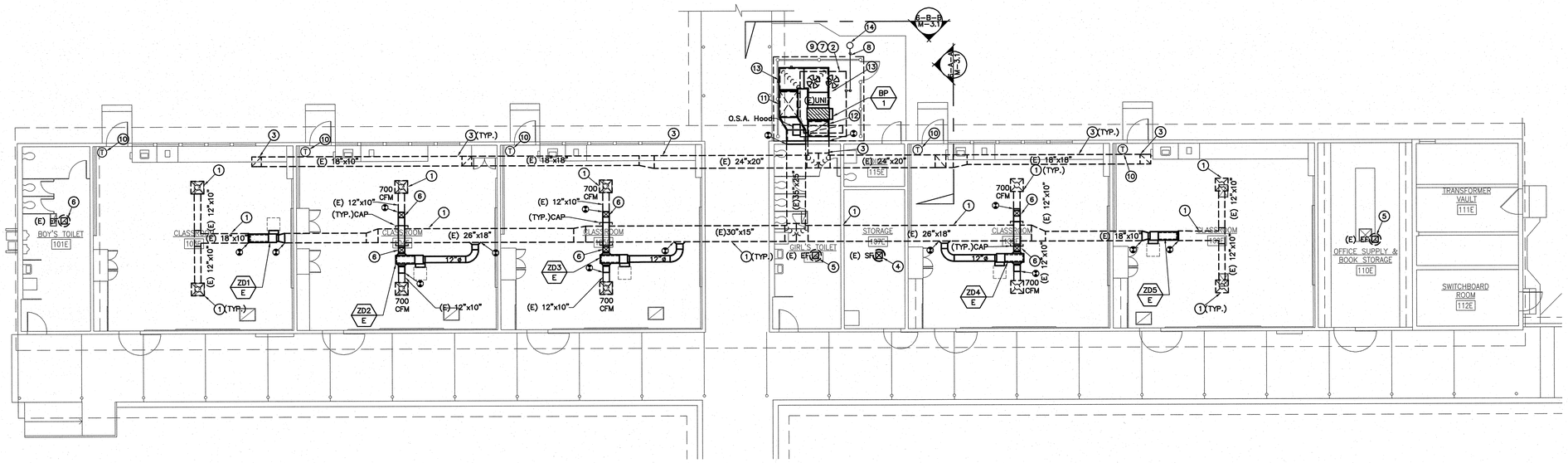

BUILDING E - REMODEL FLOOR PLAN | 1/8" = 1'-0" | 1

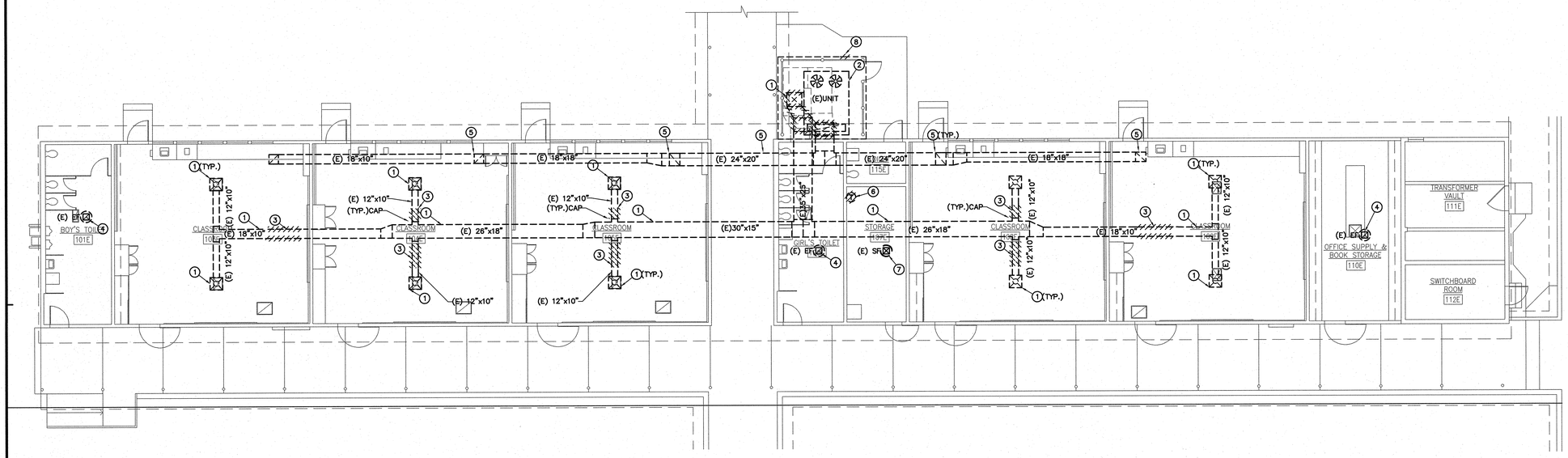

BUILDING E - DEMOLITION FLOOR PLAN | 1/8" = 1'-0" | 2

CONSTRUCTION KEY NOTES:

1. EXISTING MAIN SUPPLY DUCTWORK AND SUPPLY AIR DIFFUSERS TO REMAIN.SEE SHEET #2,#3, AND #4/M-4.1 FOR CEILING DIFFUSER AND DUCT SUPPORT DETAIL.
2. EXISTING UNIT TO REMIAN
3. EXISTING MAIN RETURN DUCT AND GRILLES TO REMAIN.SEE SHEET #2,#3, AND #4/M-4.1 FOR CEILING DIFFUSER AND DUCT SUPPORT DETAIL.
4. EXISTING SUPPLY FAN AND DUCTWORK TO REMAIN.
5. EXISTING EXHAUST FAN AND DUCTWORK TO REMAIN.
6. CONTRACTOR TO OFFSET NEW (W) 12"x10" DUCT ABOVE MAIN SUPPLY DUCT.
7. CONTRACTOR TO PROVIDE EXTENSION ON GAS PIPING TO EXISTING .
8. CONTRACTOR TO PROVIDE AN EXTENSION ON CONDENSATE PIPING TO DRYWELL. PROVIDE NEW VENTED P-TRAP WHERE NECESSARY.
9. CONTRACTOR TO PROVIDE O.S.A. AND RETURN DAMPER IF EXISTING UNIT DOES NOT HAVE ONE.
10. ELECTRONIC EMS THERMOSTAT MOUNT AT 48" A.F.F. SEE DETAIL SHEET #7/M-4.1 FOR A/C CONTROL.
11. NEW 36"x28" (L) 40"x32" SUPPLY DUCT. CONTRACTOR TO PROVIDE CONNECTION TO EXISTING SUPPLY DUCT.
12. NEW 36"x28" (L) 40"x30" SUPPLY DUCT.
13. NEW 36"x12" (L) 40"x16" DUCT TO BE DUCTED TO BYPASS DAMPER AND SUPPLY DUCT.
14. NEW DRYWELL. SEE DETAIL SHEET #5/M-4.1.

CONSTRUCTION NOTES:

1. CONTRACTOR SHALL COORDINATE WORK WITH OTHER TRADES AS NECESSARY PRIOR TO INSTALLATION.
2. CONTRACTOR SHALL MAINTAIN PROPER CLEARANCES FROM ALL ELECTRICAL EQUIPMENT AND SERVICE CLEARANCES FOR MECHANICAL EQUIPMENT.
4. FRESH AIR INTAKES SHALL BE 10'-0" MIN. AWAY FROM ALL EXHAUST OUTLETS, PLUMBING VENTS, AND FLUES.
5. CONTRACTOR SHALL COORDINATE EXACT EQUIPMENT PAD SIZES AND LOCATIONS WITH OTHER TRADES PRIOR TO INSTALLATION.
6. MAINTAIN MANUFACTURER MIN. CLEARANCES ON ALL AC UNITS.
7. BEFORE BIDDING ON THIS WORK, THE CONTRACTOR SHALL MAKE A CAREFUL EXAMINATION OF THE PREMISES, EXISTING EQUIPMENT AND SERVICES. HE SHALL DEFINITELY DETERMINE IN ADVANCE, THE METHODS OF INSTALLING AND CONNECTING THE NEW EQUIPMENT, DUCTWORK, AND PIPING THE MEANS TO BE PROVIDED FOR GETTING THE EQUIPMENT AND MATERIALS INTO PLACE AND SHALL MAKE HIMSELF THOROUGHLY FAMILIAR WITH ALL OF THE REQUIREMENTS OF THE PROJECT. FAILURE TO VISIT THE SITE WILL IN NO WAY RELIEVE THE SUCCESSFUL CONTRACTOR OF THE NECESSITY OF FURNISHING ANY MATERIAL OR PERFORMING ANY WORK THAT MAY BE REQUIRED TO COMPLETE THE WORK IN ACCORDANCE WITH THE DRAWINGS AND SPECIFICATIONS. THIS ADDITIONAL WORK SHALL BE PERFORMED WITHOUT ADDITIONAL COST TO THE OWNER.
8. BEFORE COMMENCEMENT OF WORK, THE CONTRACTOR SHALL VERIFY THE EXACT LOCATIONS AND DIMENSIONS OF ALL EXISTING EQUIPMENT AND ELECTRICAL SERVICES IN THE AREA OF CONSTRUCTION AND NOTIFY THE ENGINEER OF ANY DISCREPANCIES.
9. ALL NEW EXPOSED SHEET METAL DUCTWORK, SHEET METAL CURB / PLATFORM AND DUCT SUPPORT SHALL BE PREPARED AND PAINTED PER DISTRICT STANDARDS.

NORTH

DEMOLITION KEY NOTES:

1. EXISTING MAIN SUPPLY DUCTWORK AND SUPPLY AIR DIFFUSERS TO REMAIN.
2. EXISTING AC UNIT, AC UNIT CURB AND RELATED ACCESSORIES TO REMAIN.
3. PARTIAL EXISTING SUPPLY AIR DUCT AND EXISTING MANUAL VOLUME DAMPER TO BE REMOVED. CAP UNUSED DUCT OPENING.
4. EXISTING EXHAUST FAN AND DUCTWORK TO REMAIN.
5. EXISTING MAIN RETURN DUCT AND AIR GRILLES TO REMAIN.
6. EXISTING TSTAT TO BE REMOVED.
7. EXISTING SUPPLY FAN AND DUCTWORK TO REMAIN.
8. PORTION OF EXISTING UNIT PAD TO BE DEMO FOR CONDENSATE ROUTING TO DRYWELL.

GENERAL DEMOLITION NOTES

1. OWNER SHALL HAVE FIRST RIGHT OF REFUSAL ON ALL ITEMS TO BE REMOVED.CONTRACTOR SHALL VERIFY ALL SUCH ITEMS WITH OWNER PRIOR TO REMOVAL. ALL ITEMS NOT REFUSED BY OWNER SHALL BE REMOVED INTACT AND FULLY FUNCTIONAL BY REFUSED BY OWNER SHALL BE PROPERLY DISPOSED OF BY CONTRACTOR.
2. CONTRACTOR SHALL RE-USE EXISTING OPENINGS IN WALLS AND ROOF WHEREVER POSSIBLE. COORDINATE WITH OTHER TRADES AS NECESSARY. GENERAL CONTRACTOR SHALL MODIFY OPENING AS REQUIRED TO ACCOMMODATE NEW MECHANICAL DEVICE.
3. GENERAL CONTRACTOR SHALL PATCH ALL OPENINGS IN WALLS, ROOF, ETC. THAT WILL NOT BE REUSED FOR FUTURE WORK. COORDINATE AS NECESSARY WITH OTHER TRADES.
4. CONTRACTOR SHALL COORDINATE WITH OWNER PRIOR TO ANY WORK BEING DONE STORAGE OF MECHANICAL EQUIPMENT TO BE RE-USED DURING CONSTRUCTION.
5. PRIOR TO ANY WORK BEING DONE CONTRACTOR SHALL MAKE A CAREFUL EVALUATION OF THE EXISTING CONDITIONS AND VERIFY ALL METHODS OF REMOVAL AND INSTALLATION OF MECHANICAL EQUIPMENT.
6. CONTRACTOR SHALL COORDINATE ALL DEMOLITION WORK WITH THE WORK OF ALL OTHER TRADES.
7. CONTRACTOR SHALL CLEAN ALL AIR DEVICES AND DUCTWORK TO REMAIN PER SPECIFICATIONS.
8. CONTRACTOR SHALL CLEAN ALL EXISTING DUCTWORK INCLUDING LINED DUCTWORK TO REMAIN PER SPECIFICATIONS. PRIOR TO BID AND BEFORE COMMENCEMENT OF ANY WORK ALL EXISTING DUCTWORK TO REMAIN SHALL BE CONFIRMED ON SITE.

NORTH

WLC ARCHITECTS
CLIENT FOCUSED • PASSION DRIVEN

SOUTHERN CALIFORNIA
8163 ROCHESTER AVENUE, SUITE 100
RANCHO CUCAMONGA
CALIFORNIA 91730-0729
TEL: 909-987-0909
www.wlcarchitects.com

LONGFELLOW ELEMENTARY SCHOOL HVAC REPLACEMENT

COMPTON UNIFIED SCHOOL DISTRICT
1101 S DWIGHT AVE.
COMPTON, CA 90220

LICENSED ARCHITECT MARK GRAHAM C-26046 03-31-19 STATE OF CALIFORNIA

REGISTERED PROFESSIONAL ENGINEER JEFF BAKER No. M29253 Exp. 6/30/19 MECHANICAL STATE OF CALIFORNIA

CONSULTANT

IDENTIFICATION STAMP DIV. OF THE STATE ARCHITECT OFFICE OF REGULATION SERVICES
APPL 03-118423
AC FLS SS EY
DATE NOV 0 2018
FILE: 19-23

NO	DATE	BY	DESCRIPTION
			REVISIONS

DRAWN: KC	CHECKED:
DATE: 3/6/2018	SCALE:
PROJECT NUMBER: 570064	

BUILDING E DEMO AND REMODEL FLOOR PLANS

DRAWING NUMBER: M-2.3

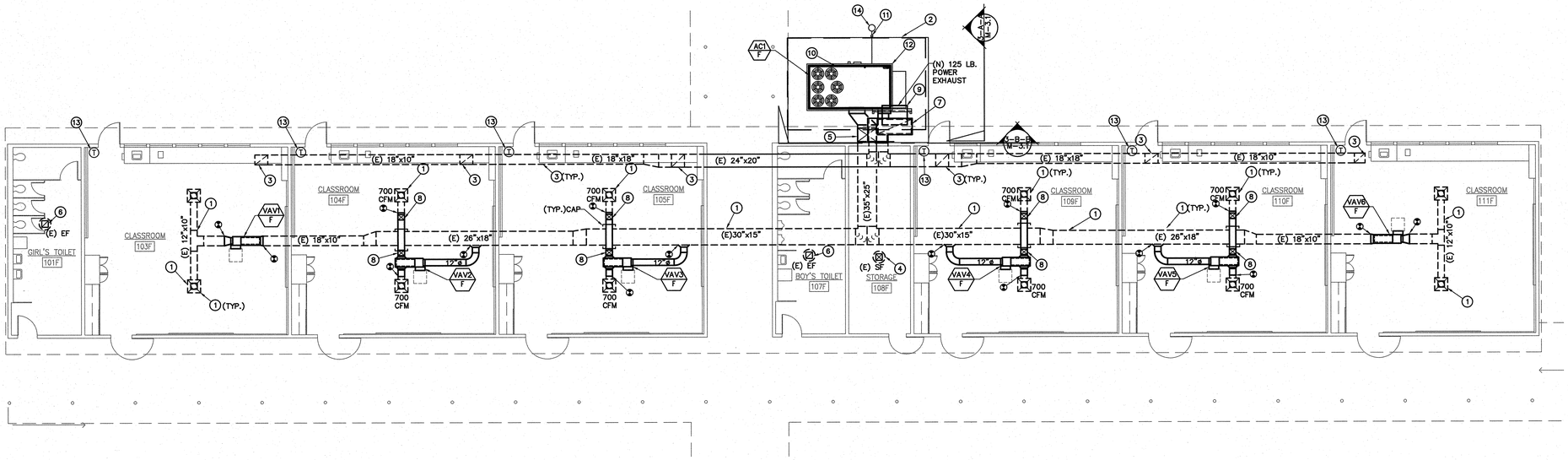

CONSTRUCTION KEY NOTES:

1. EXISTING MAIN SUPPLY DUCTWORK AND SUPPLY AIR DIFFUSERS TO REMAIN.SEE SHEET #2,#3, AND #4/M-4.1 FOR CEILING DIFFUSER AND DUCT SUPPORT DETAIL.
2. NEW FENCE AND CONCRETE PAD.
3. EXISTING MAIN RETURN DUCT AND GRILLES TO REMAIN.SEE SHEET #2,#3, AND #4/M-4.1 FOR CEILING DIFFUSER AND DUCT SUPPORT DETAIL.
4. EXISTING SUPPLY FAN AND DUCTWORK TO REMAIN.
5. NEW 35"X25"(L) SUPPLY AIR DUCT. 40"X28" SHEET METAL SIZES. SEE STRUCTURAL SHEET #1/S2.1.
6. EXISTING EXHAUST FAN AND DUCTWORK TO REMAIN.
7. NEW 60"X26"(L) RETURN AIR DUCT. 64"X30" SHEET METAL SIZES. SEE STRUCTURAL SHEET #1/S2.1.
8. CONTRACTOR TO OFFSET NEW (W) 12"X10" DUCT ABOVE MAIN SUPPLY DUCT.
9. POWER EXHAUST MOUNTED ON THE NEW RETURN DUCT. SEE STRUCTURAL SHEET #1/S2.1.
10. NEW AC UNIT WILL BE ON CONCRETE PAD. SEE DETAIL SHEET #10/M-4.1 FOR PAD.
11. 3/4" CONDENSATE DRAIN TO DRYWELL. PROVIDE NEW VENTED P-TRAP IF NECESSARY.
12. CONTRACTOR TO PROVIDE EXTENSION ON GAS PIPING AS REQUIRED TO RECONNECT EXISTING GAS PIPING TO NEW AC UNIT.
13. ELECTRONIC EMS THERMOSTAT MOUNT AT 48" A.F.F. SEE DETAIL SHEET #7/M-4.1 FOR A/C CONTROL.
14. NEW DRY WELL. SEE DETAIL SHEET #5/M-4.1.

CONSTRUCTION NOTES:

1. CONTRACTOR SHALL COORDINATE WORK WITH OTHER TRADES AS NECESSARY PRIOR TO INSTALLATION.
2. CONTRACTOR SHALL MAINTAIN PROPER CLEARANCES FROM ALL ELECTRICAL EQUIPMENT AND SERVICE CLEARANCES FOR MECHANICAL EQUIPMENT.
4. FRESH AIR INTAKES SHALL BE 10'-0" MIN. AWAY FROM ALL EXHAUST OUTLETS, PLUMBING VENTS, AND FLUES.
5. CONTRACTOR SHALL COORDINATE EXACT EQUIPMENT PAD SIZES AND LOCATIONS WITH OTHER TRADES PRIOR TO INSTALLATION.
6. MAINTAIN MANUFACTURER MIN. CLEARANCES ON ALL AC UNITS.
7. BEFORE BIDDING ON THIS WORK, THE CONTRACTOR SHALL MAKE A CAREFUL EXAMINATION OF THE PREMISES, EXISTING EQUIPMENT AND SERVICES. HE SHALL DEFINITELY DETERMINE IN ADVANCE, THE METHODS OF INSTALLING AND CONNECTING THE NEW EQUIPMENT, DUCTWORK, AND PIPING THE MEANS TO BE PROVIDED FOR GETTING THE EQUIPMENT AND MATERIALS INTO PLACE AND SHALL MAKE HIMSELF THOROUGHLY FAMILIAR WITH ALL OF THE REQUIREMENTS OF THE PROJECT. FAILURE TO VISIT THE SITE WILL IN NO WAY RELIEVE THE SUCCESSFUL CONTRACTOR OF THE NECESSITY OF FURNISHING ANY MATERIAL OR PERFORMING ANY WORK THAT MAY BE REQUIRED TO COMPLETE THE WORK IN ACCORDANCE WITH THE DRAWINGS AND SPECIFICATIONS. THIS ADDITIONAL WORK SHALL BE PERFORMED WITHOUT ADDITIONAL COST TO THE OWNER.
8. BEFORE COMMENCEMENT OF WORK, THE CONTRACTOR SHALL VERIFY THE EXACT LOCATIONS AND DIMENSIONS OF ALL EXISTING EQUIPMENT AND ELECTRICAL SERVICES IN THE AREA OF CONSTRUCTION AND NOTIFY THE ENGINEER OF ANY DISCREPANCIES.
9. ALL NEW EXPOSED SHEET METAL DUCTWORK, SHEET METAL CURB / PLATFORM AND DUCT SUPPORT SHALL BE PREPARED AND PAINTED PER DISTRICT STANDARDS.

NORTH

BUILDING F - REMODEL FLOOR PLAN | 1/8" = 1'-0" | 1

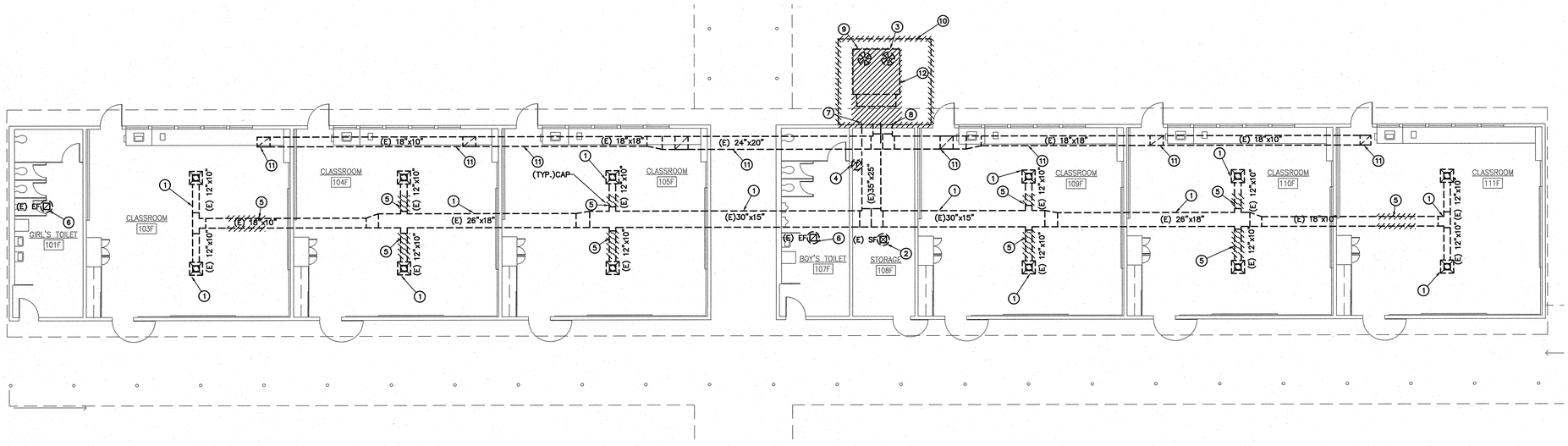

DEMOLITION KEY NOTES:

1. EXISTING MAIN SUPPLY DUCTWORK AND SUPPLY AIR DIFFUSERS TO REMAIN.
2. EXISTING SUPPLY FAN AND DUCTWORK TO REMAIN.
3. EXISTING AC UNIT, AC UNIT CURB AND RELATED ACCESSORIES TO BE REMOVED AND REPLACED WITH NEW AC UNIT.
4. EXISTING T-STAT TO BE REMOVED.
5. PARTIAL EXISTING SUPPLY AIR DUCT AND EXISTING MANUAL VOLUME DAMPER TO BE REMOVED. CAP UNUSED DUCT OPENING.
6. EXISTING EXHAUST FAN AND DUCTWORK TO REMAIN.
7. EXISTING 30"X25" MAIN SUPPLY AIR DUCT TO BE REMOVED AND REPLACED.
8. EXISTING 35"X25" RETURN DUCT TO BE REMOVED AND REPLACED.
9. EXISTING CONCRETE PAD TO BE REMOVED AND REPLACED WITH A NEW PAD.
10. EXISTING FENCE TO BE REMOVED AND REPLACED WITH A NEW FENCE AT A NEW LOCATION.
11. EXISTING MAIN RETURN DUCT AND AIR GRILLES TO REMAIN.
12. EXISTING AC UNIT CURB AND RELATED ACCESSORIES TO BE REMOVED AND REPLACED WITH NEW.

GENERAL DEMOLITION NOTES

1. OWNER SHALL HAVE FIRST RIGHT OF REFUSAL ON ALL ITEMS TO BE REMOVED.CONTRACTOR SHALL VERIFY ALL SUCH ITEMS WITH OWNER PRIOR TO REMOVAL. ALL ITEMS NOT REFUSED BY OWNER SHALL BE REMOVED INTACT AND FULLY FUNCTIONAL BY REFUSED BY OWNER SHALL BE PROPERLY DISPOSED OF BY CONTRACTOR.
2. CONTRACTOR SHALL RE-USE EXISTING OPENINGS IN WALLS AND ROOF WHEREVER POSSIBLE. COORDINATE WITH OTHER TRADES AS NECESSARY. GENERAL CONTRACTOR SHALL MODIFY OPENING AS REQUIRED TO ACCOMMODATE NEW MECHANICAL DEVICE.
3. GENERAL CONTRACTOR SHALL PATCH ALL OPENINGS IN WALLS, ROOF, ETC. THAT WILL NOT BE REUSED FOR FUTURE WORK. COORDINATE AS NECESSARY WITH OTHER TRADES.
4. CONTRACTOR SHALL COORDINATE WITH OWNER PRIOR TO ANY WORK BEING DONE STORAGE OF MECHANICAL EQUIPMENT TO BE RE-USED DURING CONSTRUCTION.
5. PRIOR TO ANY WORK BEING DONE CONTRACTOR SHALL MAKE A CAREFUL EVALUATION OF THE EXISTING CONDITIONS AND VERIFY ALL METHODS OF REMOVAL AND INSTALLATION OF MECHANICAL EQUIPMENT.
6. CONTRACTOR SHALL COORDINATE ALL DEMOLITION WORK WITH THE WORK OF ALL OTHER TRADES.
7. CONTRACTOR SHALL CLEAN ALL AIR DEVICES AND DUCTWORK TO REMAIN PER SPECIFICATIONS.
8. CONTRACTOR SHALL CLEAN ALL EXISTING DUCTWORK INCLUDING LINED DUCTWORK TO REMAIN PER SPECIFICATIONS. PRIOR TO BID AND BEFORE COMMENCEMENT OF ANY WORK ALL EXISTING DUCTWORK TO REMAIN SHALL BE CONFIRMED ON SITE.

NORTH

BUILDING F - DEMOLITION FLOOR PLAN | 1/8" = 1'-0" | 2

ARCHITECTS
WLC
CLIENT FOCUSED • PASSION DRIVEN

SOUTHERN CALIFORNIA
8163 ROCHESTER AVENUE, SUITE 100
RANCHO CUCAMONGA
CALIFORNIA 91730-0729

TEL: 909-987-0909
www.wlcarchitects.com

LONGFELLOW ELEMENTARY SCHOOL HVAC REPLACEMENT

COMPTON UNIFIED SCHOOL DISTRICT
1101 S DWIGHT AVE.
COMPTON, CA 90220

LICENSED ARCHITECT MARK GRAHAM C-26046 03-31-19 STATE OF CALIFORNIA

REGISTERED PROFESSIONAL ENGINEER BAKERJIAN No. M28253 Exp. 6/30/19 MECHANICAL STATE OF CALIFORNIA

CONSULTANT

IDENTIFICATION STAMP DIV. OF THE STATE ARCHITECT OFFICE OF REGULATION SERVICES
APPL 03-118423
AC — FLS — SS — EY
DATE MAY 0 9 2019
FILE: 19-23

NO	DATE	BY	DESCRIPTION
1			REVISIONS

DRAWN: KC	CHECKED:
DATE: 3/6/2018	SCALE:
PROJECT NUMBER: 570064	

BUILDING F DEMO AND REMODEL FLOOR PLANS

DRAWING NUMBER: M-2.4

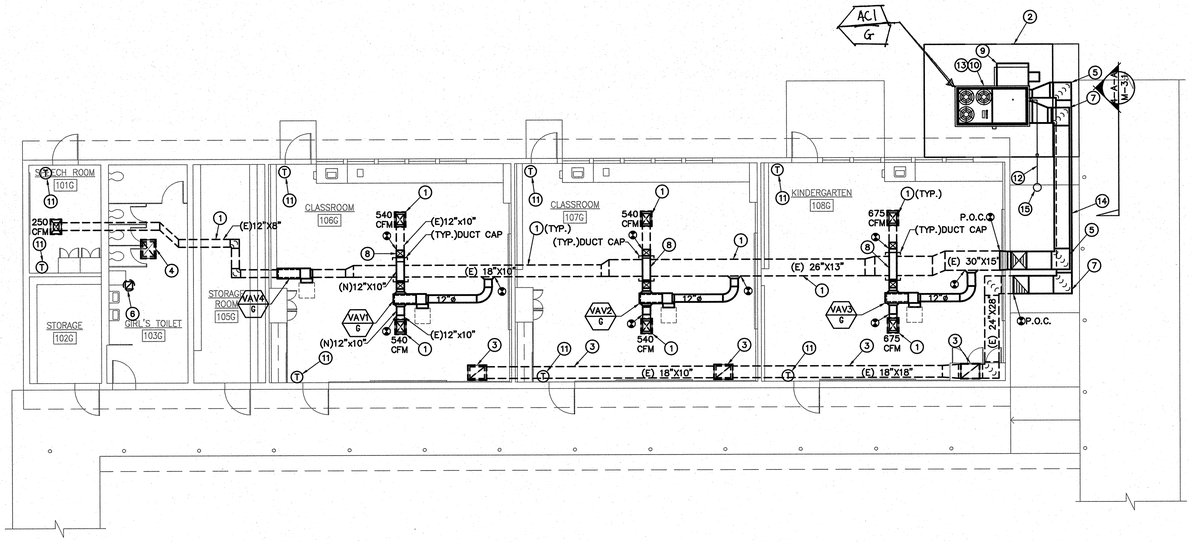

CONSTRUCTION KEY NOTES:

1. EXISTING MAIN SUPPLY DUCTWORK AND SUPPLY AIR DIFFUSERS TO REMAIN.SEE SHEET #2,#3, AND #4/M-4.1 FOR CEILING DIFFUSER AND DUCT SUPPORT DETAIL.
2. NEW FENCE AND CONCRETE PAD. SEE ARCHITECT SHEET FOR MORE DETAILS.
3. EXISTING MAIN RETURN DUCT AND GRILLES TO REMAIN.SEE SHEET #2,#3, AND #4/M-4.1 FOR CEILING DIFFUSER AND DUCT SUPPORT DETAIL.
4. EXISTING MAKE UP AIR HOOD AND DUCTWORK TO REMAIN.
5. NEW 24"X20"(L) SUPPLY AIR DUCT ON TOP. 28"X24" SHEET METAL SIZES. SEE STRUCTURAL SHEET DETAIL #3/S2.1 FOR DUCT SUPPORT.
6. EXISTING EXHAUST FAN AND DUCTWORK TO REMAIN.
7. NEW 24"X20"(L) RETURN AIR DUCT ON BOTTOM. 28"X24" SHEET METAL SIZES. SEE STRUCTURAL SHEET DETAIL #3/S2.1 FOR DUCT SUPPORT.
8. CONTRACTOR TO OFFSET NEW (W) 12"X10" DUCT ABOVE MAIN EXISTING SUPPLY DUCT.
9. POWER EXHAUST MOUNTED ON THE AC UNIT.
10. AC UNIT WILL BE ON 14" FACTORY CURB FOR POWER EXHAUST. SEE SCHEDULE SHEET M-0.2 AC UNIT SCHEDULE REMARK # 6 FOR CURB.
11. ELECTRONIC EMS THERMOSTAT MOUNT AT 48" A.F.F. SEE DETAIL SHEET #7/M-4.1 FOR A/C CONTROL.
12. 3/4" CONDENSATE DRAIN TO DRY WELL. PROVIDE NEW VENTED P-TRAP IF NECESSARY.
13. CONTRACTOR TO PROVIDE EXTENSION ON GAS AND CONDENSATE PIPING TO NEW AC UNITS.
14. SEE STRUCTURAL SHEET DETAIL #3/S2.1 FOR DUCT SUPPORT.
15. NEW DRY WELL. SEE DETAIL SHEET #5/M-4.1.

CONSTRUCTION NOTES:

1. CONTRACTOR SHALL COORDINATE WORK WITH OTHER TRADES AS NECESSARY PRIOR TO INSTALLATION.
2. CONTRACTOR SHALL MAINTAIN PROPER CLEARANCES FROM ALL ELECTRICAL EQUIPMENT AND SERVICE CLEARANCES FOR MECHANICAL EQUIPMENT.
3. FRESH AIR INTAKES SHALL BE 10'-0" MIN. AWAY FROM ALL EXHAUST OUTLETS, PLUMBING VENTS, AND FLUES.
4. CONTRACTOR SHALL COORDINATE EXACT EQUIPMENT PAD SIZES AND LOCATIONS WITH OTHER TRADES PRIOR TO INSTALLATION.
5. MAINTAIN MANUFACTURER MIN. CLEARANCES ON ALL AC UNITS.
6. BEFORE BIDDING ON THIS WORK, THE CONTRACTOR SHALL MAKE A CAREFUL EXAMINATION OF THE PREMISES, EXISTING EQUIPMENT AND SERVICES. HE SHALL DEFINITELY DETERMINE IN ADVANCE, THE METHODS OF INSTALLING AND CONNECTING THE NEW EQUIPMENT, DUCTWORK, AND PIPING THE MEANS TO BE PROVIDED FOR GETTING THE EQUIPMENT AND MATERIALS INTO PLACE AND SHALL MAKE HIMSELF THOROUGHLY FAMILIAR WITH ALL OF THE REQUIREMENTS OF THE PROJECT. FAILURE TO VISIT THE SITE WILL IN NO WAY RELIEVE THE SUCCESSFUL CONTRACTOR OF THE NECESSITY OF FURNISHING ANY MATERIAL OR PERFORMING ANY WORK THAT MAY BE REQUIRED TO COMPLETE THE WORK IN ACCORDANCE WITH THE DRAWINGS AND SPECIFICATIONS. THIS ADDITIONAL WORK SHALL BE PERFORMED WITHOUT ADDITIONAL COST TO THE OWNER.
7. BEFORE COMMENCEMENT OF WORK, THE CONTRACTOR SHALL VERIFY THE EXACT LOCATIONS AND DIMENSIONS OF ALL EXISTING EQUIPMENT AND ELECTRICAL SERVICES IN THE AREA OF CONSTRUCTION AND NOTIFY THE ENGINEER OF ANY DISCREPANCIES.
8. ALL NEW EXPOSED SHEET METAL DUCTWORK, SHEET METAL CURB / PLATFORM AND DUCT SUPPORT SHALL BE PREPARED AND PAINTED PER DISTRICT STANDARDS.

NORTH

BUILDING G - REMODEL FLOOR PLAN | 1/8" = 1'-0" | 1

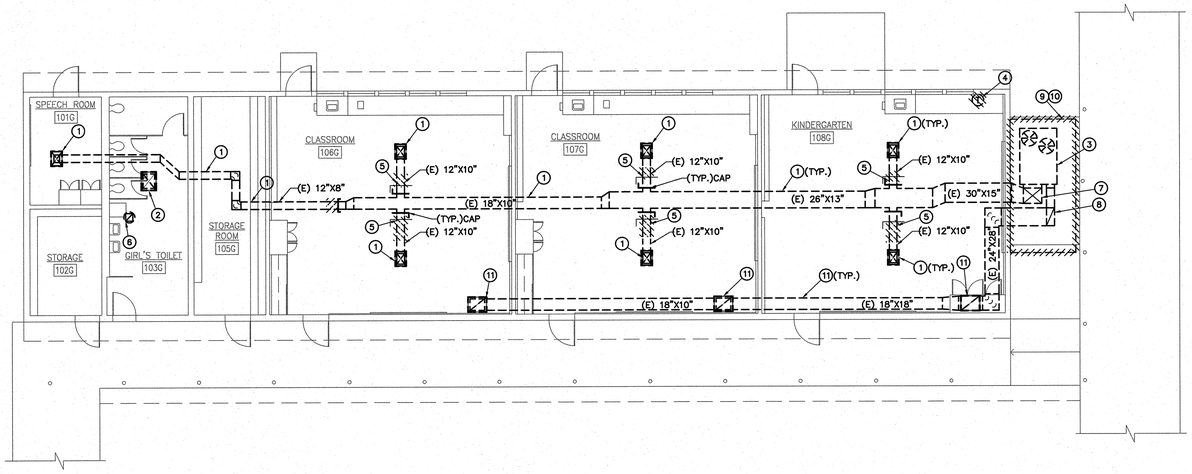

DEMOLITION KEY NOTES:

1. EXISTING MAIN SUPPLY DUCTWORK AND SUPPLY AIR DIFFUSERS TO REMAIN.
2. EXISTING MAKE UP AIR HOOD AND DUCTWORK TO REMAIN.
3. EXISTING AC UNIT, AC UNIT CURB AND RELATED ACCESSORIES TO BE REMOVED AND REPLACED WITH NEW AC UNIT.
4. EXISTING T-STAT TO BE REMOVED.
5. PARTIAL EXISTING SUPPLY AIR DUCT AND EXISTING MANUAL VOLUME DAMPER TO BE REMOVED. CAP UNUSED DUCT OPENING.
6. EXISTING EXHAUST FAN AND DUCTWORK TO REMAIN.
7. EXISTING 30"X15"(L) MAIN SUPPLY AIR DUCT TO BE REMOVED AND REPLACED.
8. EXISTING 24"X28" (L) RETURN DUCT TO BE REMOVED AND REPLACED.
9. EXISTING CONCRETE PAD TO BE REMOVED AND REPLACED WITH A NEW PAD.
10. EXISTING FENCE TO BE REMOVED AND REPLACED WITH A NEW FENCE. SEE ARCHITECT SHEET FOR MORE DETAILS.
11. EXISTING MAIN RETURN DUCT AND AIR GRILLES TO REMAIN.

GENERAL DEMOLITION NOTES

1. OWNER SHALL HAVE FIRST RIGHT OF REFUSAL ON ALL ITEMS TO BE REMOVED.CONTRACTOR SHALL VERIFY ALL SUCH ITEMS WITH OWNER PRIOR TO REMOVAL. ALL ITEMS NOT REFUSED BY OWNER SHALL BE REMOVED INTACT AND FULLY FUNCTIONAL BY REFUSED BY OWNER SHALL BE PROPERLY DISPOSED OF BY CONTRACTOR.
2. CONTRACTOR SHALL RE-USE EXISTING OPENINGS IN WALLS AND ROOF WHEREVER POSSIBLE. COORDINATE WITH OTHER TRADES AS NECESSARY. GENERAL CONTRACTOR SHALL MODIFY OPENING AS REQUIRED TO ACCOMMODATE NEW MECHANICAL DEVICE.
3. GENERAL CONTRACTOR SHALL PATCH ALL OPENINGS IN WALLS, ROOF, ETC. THAT WILL NOT BE REUSED FOR FUTURE WORK. COORDINATE AS NECESSARY WITH OTHER TRADES.
4. PRIOR TO ANY WORK BEING DONE CONTRACTOR SHALL MAKE A CAREFUL EVALUATION OF THE EXISTING CONDITIONS AND VERIFY ALL METHODS OF REMOVAL AND INSTALLATION OF MECHANICAL EQUIPMENT.
5. CONTRACTOR SHALL COORDINATE ALL DEMOLITION WORK WITH THE WORK OF ALL OTHER TRADES.
6. CONTRACTOR SHALL CLEAN ALL AIR DEVICES AND DUCTWORK TO REMAIN PER SPECIFICATIONS.
7. CONTRACTOR SHALL CLEAN ALL EXISTING DUCTWORK INCLUDING LINED DUCTWORK TO REMAIN PER SPECIFICATIONS. PRIOR TO BID AND BEFORE COMMENCEMENT OF ANY WORK ALL EXISTING DUCTWORK TO REMAIN SHALL BE CONFIRMED ON SITE.

NORTH

BUILDING G - DEMOLITION FLOOR PLAN | 1/8" = 1'-0" | 2

WLC ARCHITECTS
CLIENT FOCUSED • PASSION DRIVEN
SOUTHERN CALIFORNIA
8163 ROCHESTER AVENUE, SUITE 100
RANCHO CUCAMONGA
CALIFORNIA 91730-0729
TEL: 909-987-0909
www.wlcarchitects.com

LONGFELLOW ELEMENTARY SCHOOL HVAC REPLACEMENT

COMPTON UNIFIED SCHOOL DISTRICT
1101 S DWIGHT AVE.
COMPTON, CA 90220

LICENSED ARCHITECT MARK GRAHAM C-26546 03-31-19 STATE OF CALIFORNIA
REGISTERED PROFESSIONAL ENGINEER JAMES BARFIELD No. M29253 Exp. 6/30/19 MECHANICAL STATE OF CALIFORNIA

CONSULTANT

IDENTIFICATION STAMP DIV. OF THE STATE ARCHITECT OFFICE OF REGULATION SERVICES
APPL 03-118423
AC FLS SS EY
DATE MAR 05 2018
FILE: 19-23

NO	DATE	BY	DESCRIPTION
1			REVISIONS

DRAWN: KC | CHECKED:
DATE: 3/6/2018 | SCALE:
PROJECT NUMBER: 570064

BUILDING G DEMO AND REMODEL FLOOR PLANS

DRAWING NUMBER: M-2.5

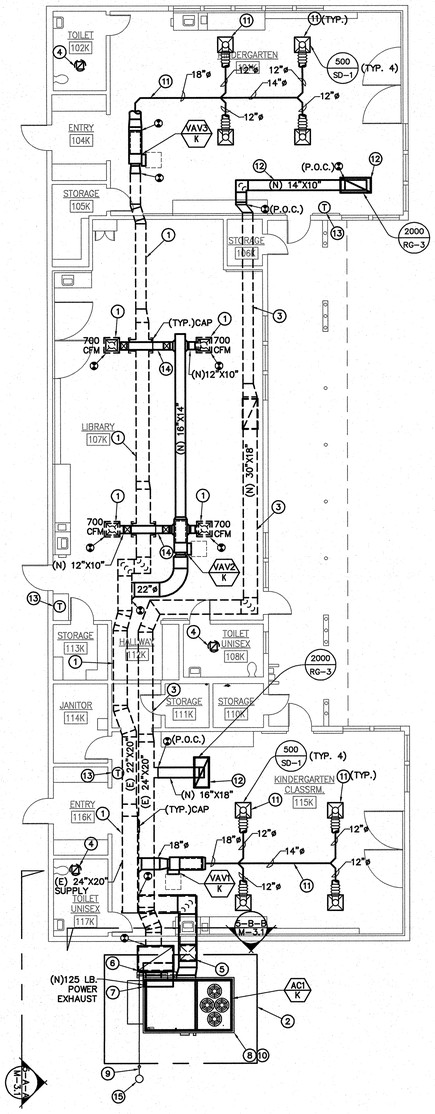

CONSTRUCTION KEY NOTES:

1. EXISTING MAIN SUPPLY DUCTWORK AND SUPPLY AIR DIFFUSERS TO REMAIN. SEE SHEET #2,#3, AND #4/M-4.1 FOR CEILING DIFFUSER AND DUCT SUPPORT DETAIL.
2. NEW FENCE AND CONCRETE PAD.
3. EXISTING MAIN RETURN DUCT AND GRILLES TO REMAIN.SEE SHEET #2,#3, AND #4/M-4.1 FOR CEILING DIFFUSER AND DUCT SUPPORT DETAIL.
4. EXISTING EXHAUST FAN AND DUCTWORK TO REMAIN.
5. NEW 24"X22"(L) SUPPLY AIR DUCT. 28"X26" SHEET METAL SIZES. SEE STRUCTURAL DETAIL SHEET #4/S2.1.
6. NEW 52"X36"(L) RETURN AIR DUCT. 56"X40" SHEET METAL SIZES. SEE STRUCTURAL DETAIL SHEET #4/S2.1.
7. POWER EXHAUST MOUNTED ON THE NEW RETURN DUCT. SEE STRUCTURAL DETAIL SHEET #4/S2.1.
8. NEW AC UNIT WILL BE ON CONCRETE PAD. SEE DETAIL SHEET 10/M-4.1 FOR PAD.
9. ¾" CONDENSATE DRAIN TO CONNECT TO NEW DRY WELL. PROVIDE NEW VENTED P-TRAP IF NECESSARY.
10. CONTRACTOR TO PROVIDE EXTENSION ON GAS AND CONDENSATE PIPING TO EXISTING . PROVIDE NEW VENTED P-TRAP WHERE NECESSARY.
11. NEW SUPPLY AIR DUCT AND DIFFUSER TO REPLACE EXISTING.SEE SHEET #2,#3, AND #4/M-4.1 FOR CEILING DIFFUSER AND DUCT SUPPORT DETAIL.
12. NEW RETURN DUCT AND GRILLE TO REPLACE EXISTING. SEE MECHANICAL DETAIL SHEET #4/M-4.1.
13. ELECTRONIC EMS THERMOSTAT MOUNT AT 48" A.F.F. SEE DETAIL SHEET #7/M-4.1 FOR A/C CONTROL.
14. CONTRACTOR TO OFFSET NEW (W) 12"X10" DUCT ABOVE MAIN SUPPLY DUCT. SEE MECHANICAL DETAIL SHEET.
15. NEW DRY WELL. SEE DETAIL SHEET #5/M-4.1.

CONSTRUCTION NOTES:

1. CONTRACTOR SHALL COORDINATE WORK WITH OTHER TRADES AS NECESSARY PRIOR TO INSTALLATION.
2. CONTRACTOR SHALL MAINTAIN PROPER CLEARANCES FROM ALL ELECTRICAL EQUIPMENT AND SERVICE CLEARANCES FOR MECHANICAL EQUIPMENT.
4. FRESH AIR INTAKES SHALL BE 10'-0" MIN. AWAY FROM ALL EXHAUST OUTLETS, PLUMBING VENTS, AND FLUES.
5. CONTRACTOR SHALL COORDINATE EXACT EQUIPMENT PAD SIZES AND LOCATIONS WITH OTHER TRADES PRIOR TO INSTALLATION.
6. MAINTAIN MANUFACTURER MIN. CLEARANCES ON ALL AC UNITS.
7. BEFORE BIDDING ON THIS WORK, THE CONTRACTOR SHALL MAKE A CAREFUL EXAMINATION OF THE PREMISES, EXISTING EQUIPMENT AND SERVICES. HE SHALL DEFINITELY DETERMINE IN ADVANCE, THE METHODS OF INSTALLING AND CONNECTING THE NEW EQUIPMENT, DUCTWORK, AND PIPING THE MEANS TO BE PROVIDED FOR GETTING THE EQUIPMENT AND MATERIALS INTO PLACE AND SHALL MAKE HIMSELF THOROUGHLY FAMILIAR WITH ALL OF THE REQUIREMENTS OF THE PROJECT. FAILURE TO VISIT THE SITE WILL IN NO WAY RELIEVE THE SUCCESSFUL CONTRACTOR OF THE NECESSITY OF FURNISHING ANY MATERIAL OR PERFORMING ANY WORK THAT MAY BE REQUIRED TO COMPLETE THE WORK IN ACCORDANCE WITH THE DRAWINGS AND SPECIFICATIONS. THIS ADDITIONAL WORK SHALL BE PERFORMED WITHOUT ADDITIONAL COST TO THE OWNER.
8. BEFORE COMMENCEMENT OF WORK, THE CONTRACTOR SHALL VERIFY THE EXACT LOCATIONS AND DIMENSIONS OF ALL EXISTING EQUIPMENT AND ELECTRICAL SERVICES IN THE AREA OF CONSTRUCTION AND NOTIFY THE ENGINEER OF ANY DISCREPANCIES.
9. ALL NEW EXPOSED SHEET METAL DUCTWORK, SHEET METAL CURB / PLATFORM AND DUCT SUPPORT SHALL BE PREPARED AND PAINTED PER DISTRICT STANDARDS.

NORTH

BUILDING K - REMODEL FLOOR PLAN | 1/8" = 1'-0" | 1

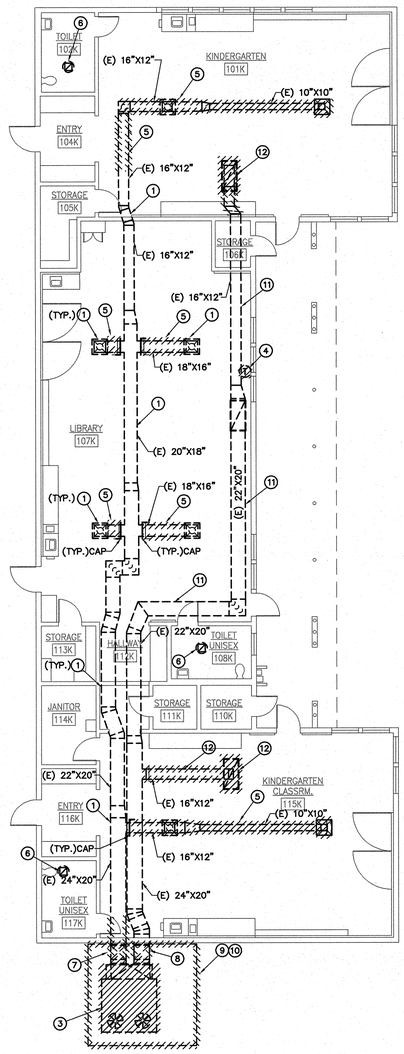

DEMOLITION KEY NOTES:

1. EXISTING MAIN SUPPLY DUCTWORK AND SUPPLY AIR DIFFUSERS TO REMAIN.
2.
3. EXISTING AC UNIT, AC UNIT CURB AND RELATED ACCESSORIES TO BE REMOVED AND REPLACED WITH NEW AC UNIT.
4. EXISTING T-STAT TO BE REMOVED.
5. PARTIAL EXISTING SUPPLY AIR DUCT AND EXISTING MANUAL VOLUME DAMPER TO BE REMOVED. CAP UNUSED DUCT OPENING.
6. EXISTING EXHAUST FAN AND DUCTWORK TO REMAIN.
7. EXISTING 24"X20" MAIN SUPPLY AIR DUCT TO BE REMOVED AND REPLACED.
8. EXISTING 24"X20" RETURN DUCT TO BE REMOVED AND REPLACED.
9. EXISTING CONCRETE PAD TO BE REMOVED AND REPLACED WITH A NEW PAD.
10. EXISTING FENCE TO BE REMOVED AND REPLACED WITH A NEW FENCE AT A NEW LOCATION.
11. EXISTING MAIN RETURN DUCT AND AIR GRILLES TO REMAIN.
12. EXISTING RETURN DUCT AND AIR GRILLES TO BE REMOVED.

GENERAL DEMOLITION NOTES

1. OWNER SHALL HAVE FIRST RIGHT OF REFUSAL ON ALL ITEMS TO BE REMOVED.CONTRACTOR SHALL VERIFY ALL SUCH ITEMS WITH OWNER PRIOR TO REMOVAL. ALL ITEMS NOT REFUSED BY OWNER SHALL BE REMOVED INTACT AND FULLY FUNCTIONAL BY REFUSED BY OWNER SHALL BE PROPERLY DISPOSED OF BY CONTRACTOR.
2. CONTRACTOR SHALL RE-USE EXISTING OPENINGS IN WALLS AND ROOF WHEREVER POSSIBLE. COORDINATE WITH OTHER TRADES AS NECESSARY. GENERAL CONTRACTOR SHALL MODIFY OPENING AS REQUIRED TO ACCOMMODATE NEW MECHANICAL DEVICE.
3. GENERAL CONTRACTOR SHALL PATCH ALL OPENINGS IN WALLS, ROOF, ETC. THAT WILL NOT BE REUSED FOR FUTURE WORK. COORDINATE AS NECESSARY WITH OTHER TRADES.
4. CONTRACTOR SHALL COORDINATE WITH OWNER PRIOR TO ANY WORK BEING DONE STORAGE OF MECHANICAL EQUIPMENT TO BE RE-USED DURING CONSTRUCTION.
5. PRIOR TO ANY WORK BEING DONE CONTRACTOR SHALL MAKE A CAREFUL EVALUATION OF THE EXISTING CONDITIONS AND VERIFY ALL METHODS OF REMOVAL AND INSTALLATION OF MECHANICAL EQUIPMENT.
6. CONTRACTOR SHALL COORDINATE ALL DEMOLITION WORK WITH THE WORK OF ALL OTHER TRADES.
7. CONTRACTOR SHALL CLEAN ALL AIR DEVICES AND DUCTWORK TO REMAIN PER SPECIFICATIONS.
8. CONTRACTOR SHALL CLEAN ALL EXISTING DUCTWORK INCLUDING LINED DUCTWORK TO REMAIN PER SPECIFICATIONS. PRIOR TO BID AND BEFORE COMMENCEMENT OF ANY WORK ALL EXISTING DUCTWORK TO REMAIN SHALL BE CONFIRMED ON SITE.

NORTH

BUILDING K - DEMOLITION FLOOR PLAN | 1/8" = 1'-0" | 2

ARCHITECTS
WLC
CLIENT FOCUSED • PASSION DRIVEN

SOUTHERN CALIFORNIA
8163 ROCHESTER AVENUE, SUITE 100
RANCHO CUCAMONGA
CALIFORNIA 91730-0729

TEL: 909-987-0909
www.wlcarchitects.com

LONGFELLOW ELEMENTARY SCHOOL HVAC REPLACEMENT

COMPTON UNIFIED SCHOOL DISTRICT
1101 S DWIGHT AVE.
COMPTON, CA 90220

LICENSED ARCHITECT — KEVIN GRAHAM — C-26046 — 03-31-19 — STATE OF CALIFORNIA

REGISTERED PROFESSIONAL ENGINEER — ROBERT BANKERD — No. M29253 — Exp. 6/30/19 — MECHANICAL — STATE OF CALIFORNIA

CONSULTANT

R.E. 19-23

IDENTIFICATION STAMP
DIV. OF THE STATE ARCHITECT
OFFICE OF REGULATION SERVICES
APPL 03-118423
AC — FLS — SS
DATE MAR 0 6 2018

NO	DATE	BY	DESCRIPTION
			REVISIONS

DRAWN: KC	CHECKED:
DATE: 3/6/2018	SCALE:
PROJECT NUMBER: 570064	

BUILDING K DEMO AND REMODEL FLOOR PLANS

DRAWING NUMBER: M-2.6

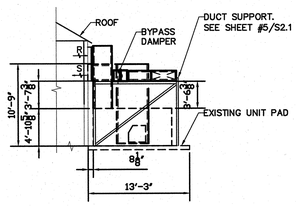

SECTION A-A

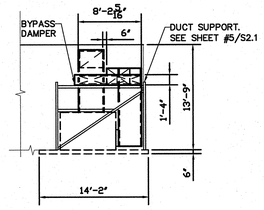

SECTION B-B

MECHANICAL SECTION BUILDING E

SCALE NONE 6

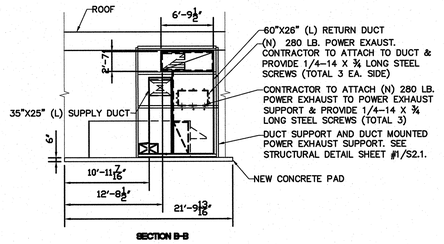

SECTION B-B

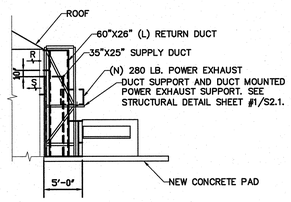

SECTION A-A

MECHANICAL SECTION BUILDING F

SCALE NONE 3

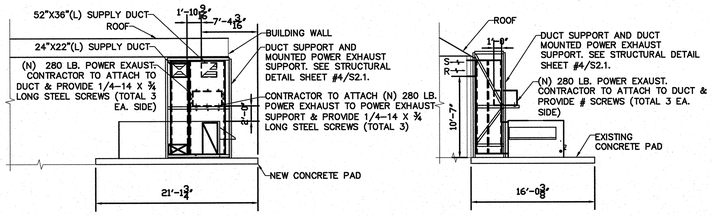

SECTION B-B

SECTION A-A

MECHANICAL SECTION BUILDING K

SCALE NONE 5

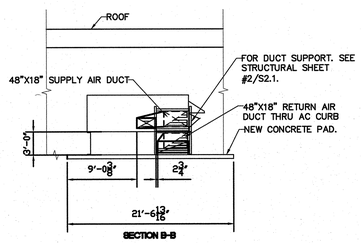

SECTION B-B

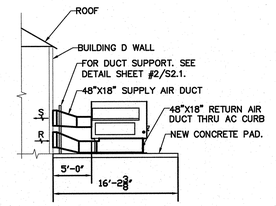

SECTION A-A

MECHANICAL SECTION BUILDING D

SCALE NONE 2

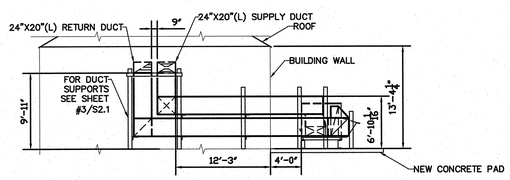

SECTION A-A

MECHANICAL SECTION BUILDING G

SCALE NONE 4

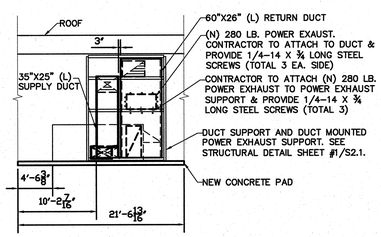

SECTION B-B

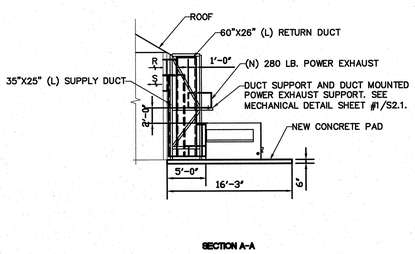

SECTION A-A

MECHANICAL SECTION BUILDING C

SCALE NONE 1

ARCHITECTS
WLC
CLIENT FOCUSED • PASSION DRIVEN

SOUTHERN CALIFORNIA
8163 ROCHESTER AVENUE, SUITE 100
RANCHO CUCAMONGA
CALIFORNIA 91730-0729

TEL: 909-987-0909

www.wlcarchitects.com

LONGFELLOW ELEMENTARY SCHOOL HVAC REPLACEMENT

COMPTON UNIFIED SCHOOL DISTRICT
1101 S DWIGHT AVE.
COMPTON, CA 90220

LICENSED ARCHITECT — MARK GRAHAM C-26046 03-31-19 — STATE OF CALIFORNIA

REGISTERED PROFESSIONAL ENGINEER — ROBERT BANEKOV No. M29253, Exp. 6/30/19 — MECHANICAL — STATE OF CALIFORNIA

CONSULTANT

IDENTIFICATION STAMP
DIV. OF THE STATE ARCHITECT
OFFICE OF REGULATION SERVICES
APPL 03-118423
AC — FLS SS KEY
DATE MAR 0 9 2018
FILE: 19-23

NO	DATE	BY	DESCRIPTION
			REVISIONS

DRAWN: KC	CHECKED:
DATE: 3/6/2018	SCALE:
PROJECT NUMBER: 570064	

MECHANICAL SECTIONS

DRAWING NUMBER: M-3.1

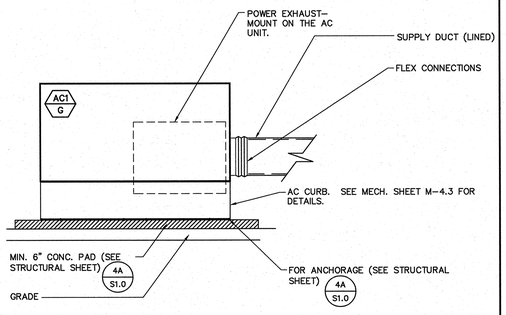

AC UNIT WITH CURB MOUNTING DETAIL

SCALE NONE | 13

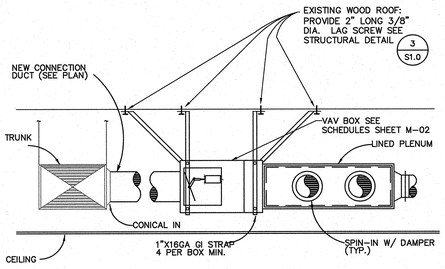

VAV BOX DETAIL

SCALE NONE | 11

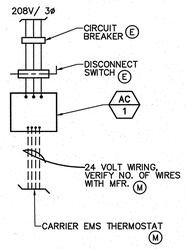

A/C CONTROL

SCALE NONE | 7

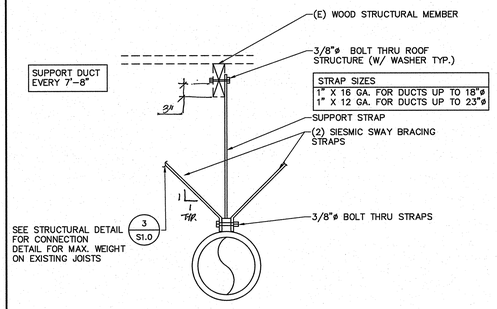

DUCT SUPPORT DETAIL – WOOD

SCALE NONE | 4

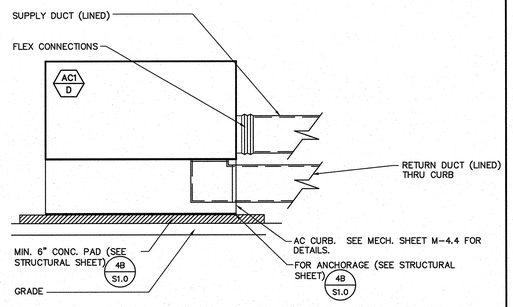

AC UNIT WITHOUT CURB MOUNTING DETAIL

SCALE NONE | 10

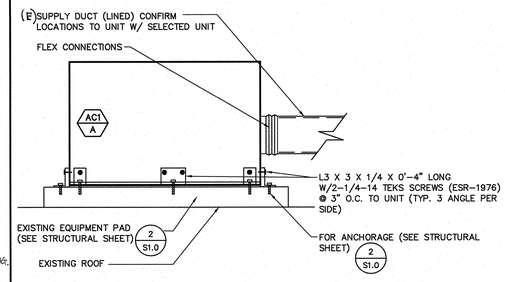

AC UNIT WITHOUT CURB MOUNTING DETAIL

SCALE NONE | 6

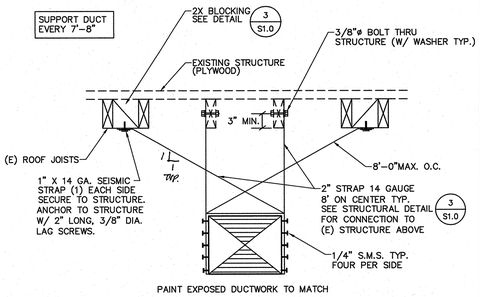

EXPOSED DUCT SUPPORT DETAIL – WOOD

SCALE NONE | 3

AC UNIT WITH DUCT THRU CURB MOUNTING DETAIL

SCALE NONE | 9

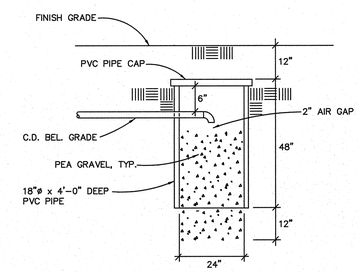

DRYWELL DETAIL

SCALE NONE | 5

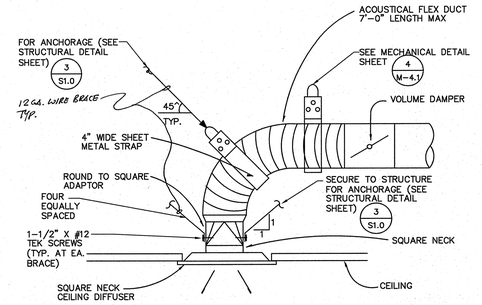

CEILING DIFFUSER DETAIL

SCALE NONE | 2

NOT USED

SCALE NONE | 12

NOT USED

SCALE NONE | 8

NOT USED

SCALE NONE

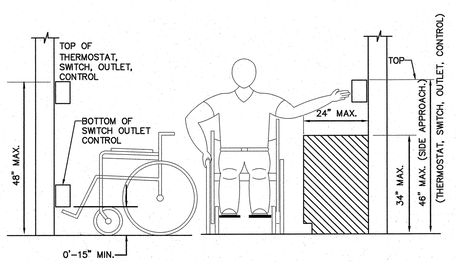

ADA CONTROL, DEVICE MOUNTING HEIGHT DETAIL

SCALE NONE | 1

ARCHITECTS
WLC
CLIENT FOCUSED • PASSION DRIVEN
SOUTHERN CALIFORNIA
8163 ROCHESTER AVENUE, SUITE 100
RANCHO CUCAMONGA
CALIFORNIA 91730-0729
TEL: 909-987-0909
www.wlcarchitects.com

LONGFELLOW ELEMENTARY SCHOOL HVAC REPLACEMENT

COMPTON UNIFIED SCHOOL DISTRICT
1101 S DWIGHT AVE.
COMPTON, CA 90220

LICENSED ARCHITECT MARK GRAHAM C-26046 03-31-19 STATE OF CALIFORNIA

REGISTERED PROFESSIONAL ENGINEER MARK BANERJEE No. M29253 Exp. 6/30/19 MECHANICAL STATE OF CALIFORNIA

CONSULTANT

IDENTIFICATION STAMP
DIV. OF THE STATE ARCHITECT
OFFICE OF REGULATION SERVICES
APPL 03-118423
AC FLS SS
DATE MAY 0 6 2019
FILE: 19-23

NO	DATE	BY	DESCRIPTION
1			REVISIONS

DRAWN: KC | CHECKED:
DATE: 3/6/2018 | SCALE:
PROJECT NUMBER: 570064

MECHANICAL DETAILS

DRAWING NUMBER: M-4.1

DETAIL-3

MAKE	MAKE	TYPE	SIZE	CURB WT
AC-1/G	CARRIER	48LCB	12A	220#

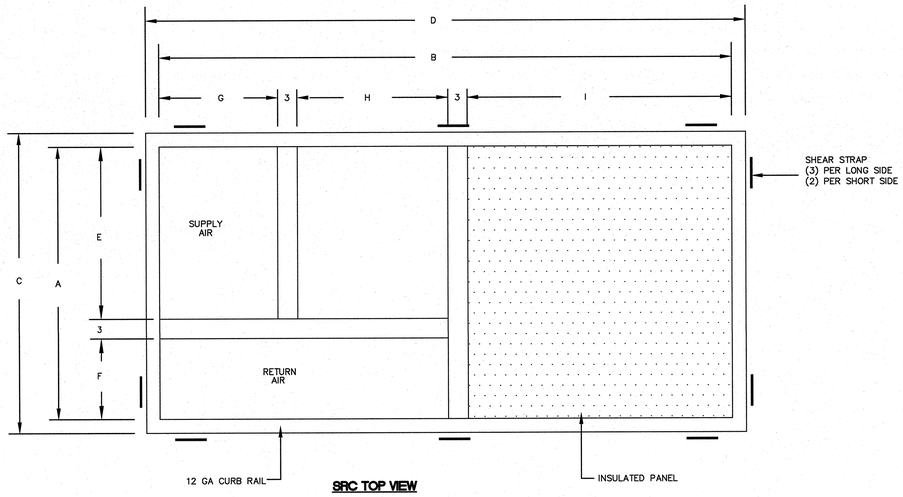

SRC TOP VIEW

A	B	C	D	E	F	G	H	I			
54-1/4	105-3/4	57-3/4	109-1/4	35-7/16	15-13/16	29-7/16	20-15/16	52-7/8			
						J	K	L	M	N	O
						60-1/16	111-3/4	3	3	109-3/4	58-1/16

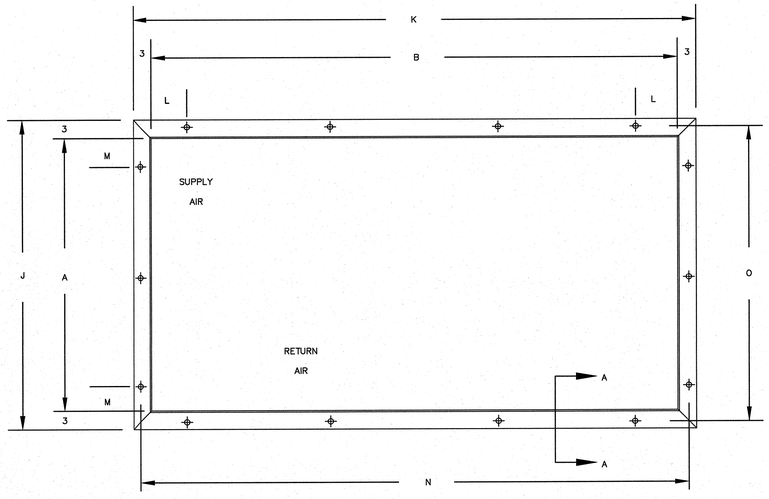

SRC FOOTPRINT

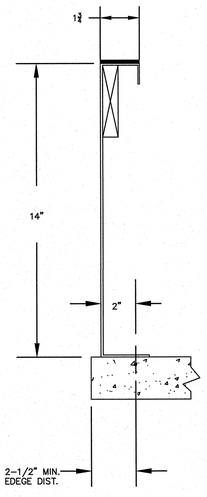

SECTION A-A

NOTES:

1. N & O DIMENSIONS ARE CENTERLINES OF ANCHOR HOLES IN CURB BOTTOM FLANGE.
2. DUCT SUPPORTS NOT SHOWN FOR CLARITY.
3. FOR ANCHORAGE, SEE STRUCTURAL DETAIL SHEET #4/S1.0.

TOP AND BOTTOM CURB DETAILS — SCALE NONE — 3

DETAIL-2

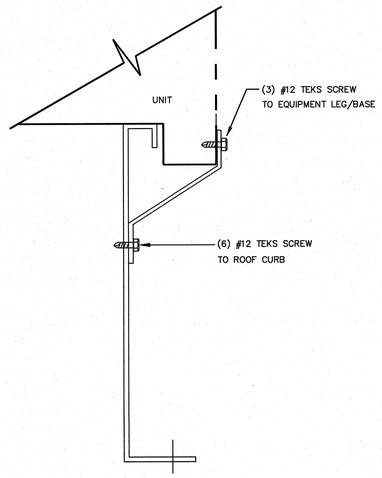

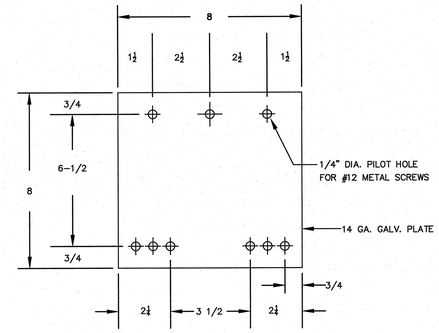

SEISMIC STRAP

ISOLATOR AND SEISMIC STRAP DETAIL — SCALE NONE — 2

DETAIL-1

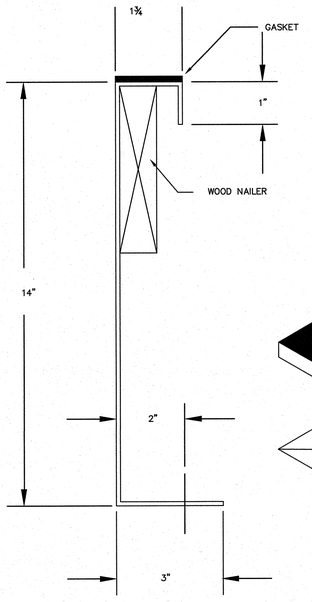

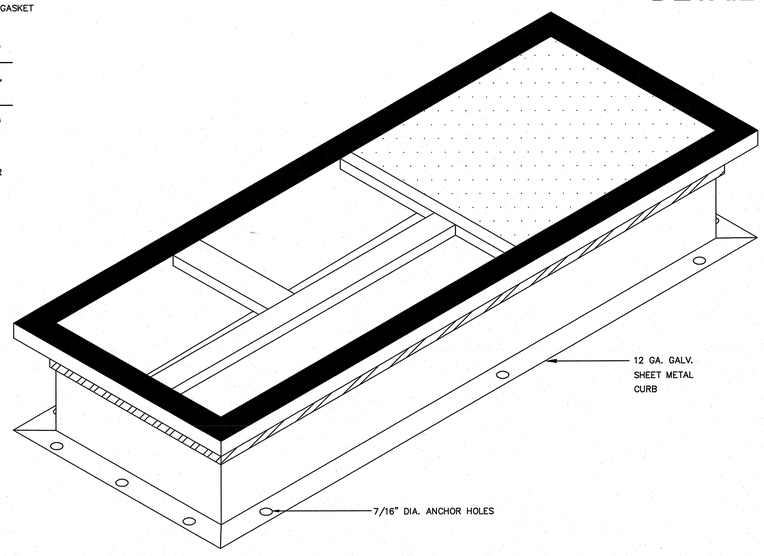

NOTES:

1. FOR ANCHOR REQUIREMENTS AND DETAILS OF ISOLATORS AND SEISMIC STRAPS, SEE DETAIL 2, 3.
2. SUBMITTED ROOF CURBS ARE LEVEL. PITCHED ROOF CURBS ARE AVAILABLE UPON REQUEST TO MATCH ROOF SLOPE.
3. NOT FOR CONSTRUCTION, ALL DIMENSIONS REQUIRE FINAL REVIEW AT COMMENCEMENT OF PROJECT

AC1/G UNITS ISO CURB MOUNTING EQUIPMENT PLATFORM DETAIL — SCALE NONE — 1

WLC ARCHITECTS
CLIENT FOCUSED • PASSION DRIVEN
SOUTHERN CALIFORNIA
8163 ROCHESTER AVENUE, SUITE 100
RANCHO CUCAMONGA
CALIFORNIA 91730-0729
TEL: 909-987-0909
www.wlcarchitects.com

LONGFELLOW ELEMENTARY SCHOOL
HVAC REPLACEMENT
COMPTON UNIFIED SCHOOL DISTRICT
1101 S DWIGHT AVE.
COMPTON, CA 90220

LICENSED ARCHITECT MARK GRAHAM C-26046 03-31-19 STATE OF CALIFORNIA

REGISTERED PROFESSIONAL ENGINEER ABBY BANERJEE No. M29253 Exp. 6/30/19 MECHANICAL STATE OF CALIFORNIA

CONSULTANT

IDENTIFICATION STAMP
DIV. OF THE STATE ARCHITECT
OFFICE OF REGULATION SERVICES
APPL 03-118423
AC — FLS — SS
DATE

FILE: 19-23

NO	DATE	BY	DESCRIPTION

REVISIONS

DRAWN: KC — CHECKED:
DATE: 3/6/2018 — SCALE:
PROJECT NUMBER: 570064

MECHANICAL DETAILS

DRAWING NUMBER: M-4.3

DETAIL-3

MARK	MAKE	TYPE	SIZE	CURB WT.
AC-1/D	CARRIER	48LCD	24	850 #

NOTES:

1) INDICATES SEISMIC TIE-DOWN PLATE.
(3) PER LONG SIDE, (3) PER SHORT SIDE, SEE DETAIL 2.

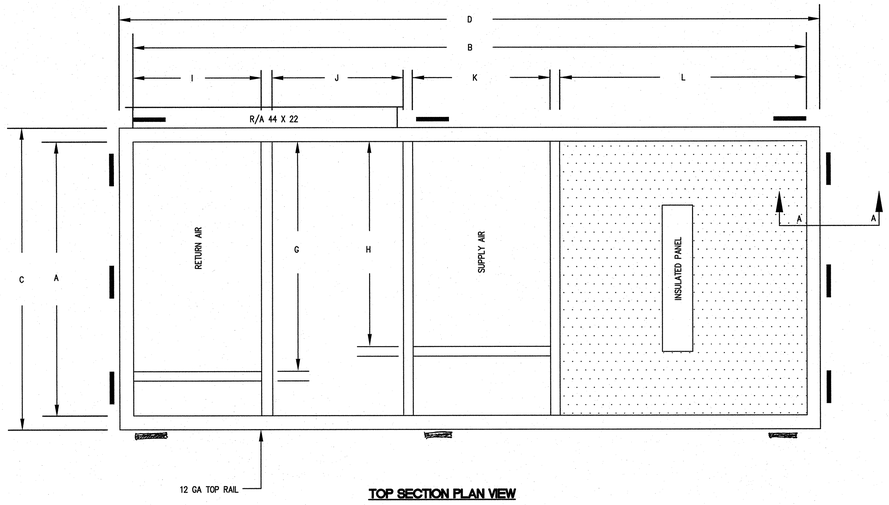

TOP SECTION PLAN VIEW

A	B	C	D	E	F	G	H	I	J	K	L	M
76-7/8	148-3/16	80-3/8	151-11/16	---	----	69-9/16	63-7/8	22-3/16	21-7/8	22-7/8	71-3/16	--
						N	O	P	Q	R	S	T
						82-7/8	154-3/16	3	3	---	152-3/16	80-7/8

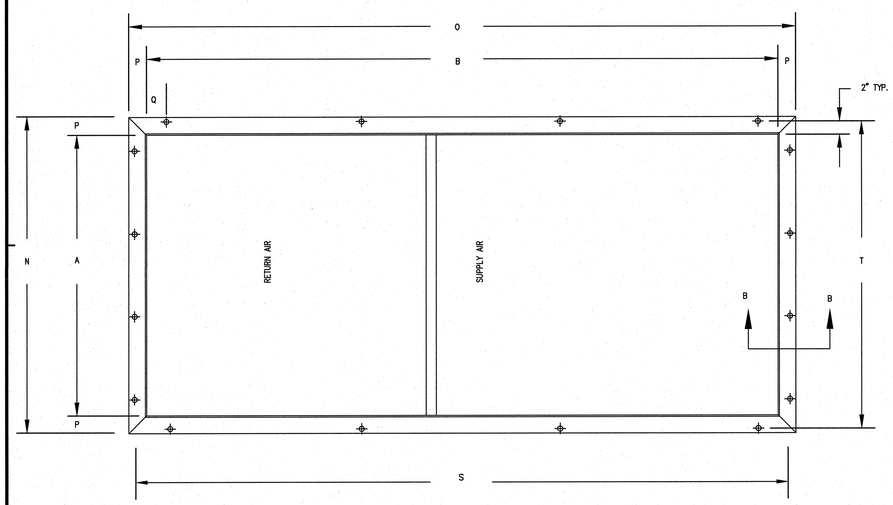

BOTTOM SECTION FOOTPRINT

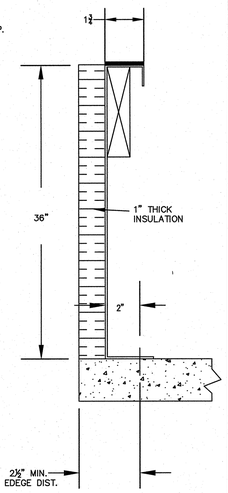

SECTION A-A

NOTES:

1. S & T DIMENSIONS ARE CENTERLINES OF ANCHOR HOLES IN CURB BOTTOM FLANGE.
2. DUCT SUPPORTS NOT SHOWN FOR CLARITY.
3. FOR ANCHORAGE, SEE STRUCTURAL DETAIL SHEET #4/S1.0.

TOP AND BOTTOM CURB DETAILS SCALE NONE 3

DETAIL-2

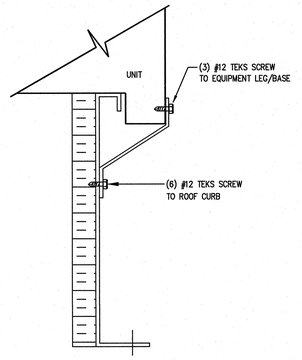

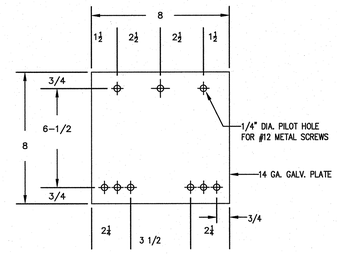

SEISMIC STRAP

AC CURB. SEE SHEET M4.2 FOR DETAILS.

ISOLATOR AND SEISMIC STRAP DETAIL SCALE NONE 2

DETAIL-1

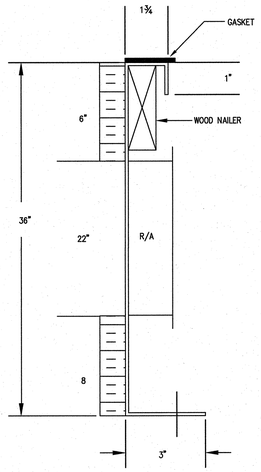

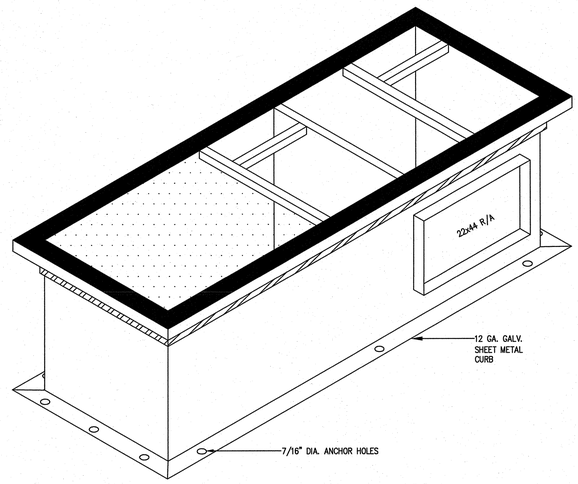

NOTES:

1. FOR ANCHOR REQUIREMENTS AND DETAILS OF ISOLATORS AND SEISMIC STRAPS, SEE DETAIL 2, 3.
2. SUBMITTED ROOF CURBS ARE LEVEL. PITCHED ROOF CURBS ARE AVAILABLE UPON REQUEST TO MATCH ROOF SLOPE.
3. NOT FOR CONSTRUCTION, ALL DIMENSIONS REQUIRE FINAL REVIEW AT COMMENCEMENT OF PROJECT

AC1/D UNITS ISO CURB MOUNTING EQUIPMENT PLATFORM DETAIL SCALE NONE 1

WLC ARCHITECTS
CLIENT FOCUSED • PASSION DRIVEN

SOUTHERN CALIFORNIA
8163 ROCHESTER AVENUE, SUITE 100
RANCHO CUCAMONGA
CALIFORNIA 91730-0729
TEL: 909-987-0909
www.wlcarchitects.com

LONGFELLOW ELEMENTARY SCHOOL HVAC REPLACEMENT

COMPTON UNIFIED SCHOOL DISTRICT
1101 S DWIGHT AVE.
COMPTON, CA 90220

LICENSED ARCHITECT MARK GRAHAM C-26046 03-31-19 STATE OF CALIFORNIA

REGISTERED PROFESSIONAL ENGINEER ABBY BANERJEE No. M29253 Exp. 6/30/19 MECHANICAL STATE OF CALIFORNIA

CONSULTANT

FILE: 19-23
IDENTIFICATION STAMP DIV. OF THE STATE ARCHITECT OFFICE OF REGULATION SERVICES
APPL 03-118423
AC FLS SS EY
DATE MAR 0 9 2018

NO	DATE	BY	DESCRIPTION

REVISIONS

DRAWN: KC	CHECKED:
DATE: 3/6/2018	SCALE:
PROJECT NUMBER: 570064	

MECHANICAL DETAILS

DRAWING NUMBER: M-4.4

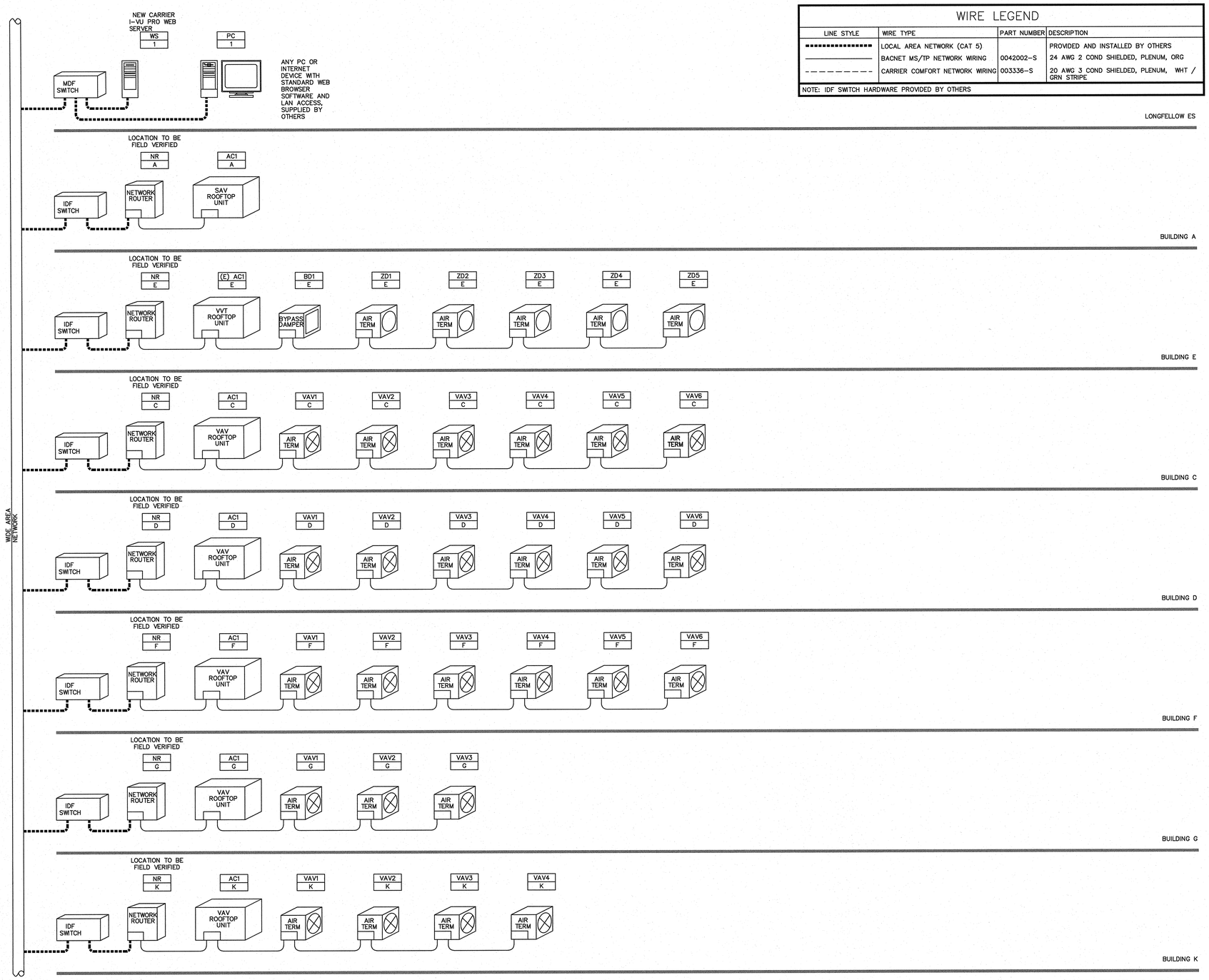

CONTROLS PROVIDED AND INSTALLED BY RUSSELL SIGLER INC CONTROLS GROUP

WIRE LEGEND

LINE STYLE	WIRE TYPE	PART NUMBER	DESCRIPTION
▪▪▪▪▪▪▪▪▪▪	LOCAL AREA NETWORK (CAT 5)		PROVIDED AND INSTALLED BY OTHERS
———	BACNET MS/TP NETWORK WIRING	0042002-S	24 AWG 2 COND SHIELDED, PLENUM, ORG
– – – – – –	CARRIER COMFORT NETWORK WIRING	003336-S	20 AWG 3 COND SHIELDED, PLENUM, WHT / GRN STRIPE

NOTE: IDF SWITCH HARDWARE PROVIDED BY OTHERS

GENERAL NOTES:

1. WHERE SCHEMATIC CONTROL IS NOT SHOWN THE CONTRACTOR SHALL COORDINATE WITH THE UNIT MANUFACTURER AND PROVIDE REQUIRED CONTROL/WIRING DIAGRAM AND PROPOSED SEQUENCE OF OPERATION.
2. PROVIDE ADDITIONAL MAIN DCP GLOBAL CONTROL PANELS TO ASSURE PROPER OPERATION, CAPACITY REQUIREMENTS AND COMMUNICATION SPEED. LOCATE IN ELECTRIC OR TR ROOMS ON ADDITIONAL FLOORS TO ACHIEVE THE MOST EFFECTIVE INSTALLATION.
3. SEE MECHANICAL SCHEDULES AND SHEETS FOR FINAL UNIT COUNTS.
4. ALL LOW VOLTAGE CONDUIT AND WIRING FOR THE EMS/CONTROLS IS THE RESPONSIBILITY OF THE EMS CONTRACTOR.
5. ALL WIRING TO BE INSTALLED IN CONDUIT IN NON-CONCEALED AND/OR NON-ACCESSABLE AREAS.
6. ALL HIGH VOLTAGE INTERLOCK WIRING FOR THE CONTROL AND EMS SYSTEMS IS THE RESPONSIBILITY OF THE EMS CONTRACTOR UNLESS SPECIFICALLY STATED OTHERWISE.
7. ALL HIGH VOLTAGE POWER WIRING IS THE RESPONSIBILITY OF THE DIV. 26 ELECTRICAL CONTRACTOR UNLESS SPECIFICALLY STATED OTHERWISE.
8. FOR GENERAL NOTES SEE DRAWING M-01.
9. PROVIDE GRAPHIC PROGRAMMING LANGUAGE VIEWED AND MAINTAINED FROM OPERATOR WORK STATION AND INTERACTIVE GRAPHICS FOR USER INTERFACE.
10. PROVIDE GRAPHIC PROGRAMMING LANGUAGE (HARDWARE AND SOFTWARE) AS REQUIRED TO INTERACT WITH EXISTING CAMPUS BUILDING MANAGEMENT SYSTEM.
11. THIS INFORMATION IS DIAGRAMMATIC ONLY (CORRECT COUNTS FOR ALL CONTROL DEVICES BY CONTROLS CONTRACTOR).
12. PROVIDE NECESSARY INTERFACE TO CONNECT TO OTHER MANUFACTURER OPEN PROTOCOL MICROPROCESSOR BASED EQUIPMENT. COORDINATE WITH UNIT MANUFACTURERS TO MAKE THIS CONNECTION POSSIBLE.
13. ALL DIGITAL INPUTS (DI) AND OUTPUTS (DO) SHALL HAVE RUNTIME ACCUMULATOR FOR MAINTENANCE MONITORING.
14. CONTROLS SYSTEM SHALL BE INTEGRATED WITH BUILDING NETWORK TO ALLOW USE OF THE CONTROL SYSTEM AT ANY WORKSTATION. MULTI-LEVEL PASSWORDS SHALL BE INCORPORATED.
15. BIDDERS SHALL CREATE THEIR OWN ARCHITECTURE TO PROVIDE FOR A FULLY FUNCTIONING OPEN PROTOCOL THAT IS COMPATIBLE WITH ANY BUILDING MANAGEMENT SYSTEM.
16. PROVIDE TIME DELAY PROGRAM FOR SEQUENCED RESTARTING OF ALL EQUIPMENT.
17. PROVIDE QUANTITY AND DETERMINE LOCATION OF ALL 120V POWER CONNECTIONS REQUIRED FOR ALL PANELS,TRANSFORMERS, CONTROLLERS, ETC. TO ACCOMPLISH INSTALLATION AND A FULLY FUNCTIONING SYSTEM.
18. ALL LOW VOLTAGE CONTROLS WIRING INCLUDING LINE VOLTAGE (120 VOLT) WIRING TO PROVIDE POWER TO BUILDING AUTOMATION SYSTEM (BAS) PANELS SHALL BE FURNISHED AND INSTALLED BY CONTROLS CONTRACTOR. COORDINATE WITH ELECTRICAL CONTRACTOR TO DETERMINE SOURCES FOR 120 VOLT.
19. ALL PIPING NECESSARY FOR CONTROLS SCOPE OF WORK SHALL BE FURNISHED AND INSTALLED BY CONTROLS CONTRACTOR.
20. DDC SYSTEM POINTS AND OPERATING SEQUENCES REFLECTED ON THIS DOCUMENT SHALL PROVIDE BASIS OF DESIGN FOR CONTROLS SYSTEMS.
21. CONTROLS CONTRACTOR SHALL BE FULLY RESPONSIBLE TO DESIGN, FURNISH, AND INSTALL CENTRALIZED DDC CONTROLS SYSTEM TO DELIVER FULLY FUNCTIONAL CONTROLS SYSTEM. ALL NECESSARY HARDWARE AND SOFTWARE SHALL BE INCLUDED.
22. CONTROLS CONTRACTOR SHALL REVIEW ELECTRICAL DRAWINGS TO INCLUDE ADDITIONAL CONTROLS SCOPE AS REQUIRED.
23. ALL INPUTS AND OUTPUTS SHALL BE TRENDED.
24. CONTROLS CONTRACTOR SHALL PROVIDE REQUIRED ASSISTANCE TO COMMISSION VARIOUS MECHANICAL, PLUMBING AND ELECTRICAL SYSTEM.
25. ALL CONTROL POINTS ARE REQUIRED TO BE READABLE, GRAPHICALLY VIEWABLE AND TRENDABLE BY FACILITY PERSONNEL.
26. THE BMS/BAS/EMS SYSTEM SHALL INITIATE ALARMS AND NOTIFY TENANT VIA TEXT MESSAGE AND E-MAIL.
27. SURVEY ALL THE CONSTRUCTION FLOORS AND PROVIDE NEW GRAPHIC/PROGRAMMING (HARDWARE AND SOFTWARE) FOR MECHANICAL, PLUMBING AND ELECTRICAL SYSTEM.
28. ALL CONTROL DEVICES SHALL BE FIELD CALIBRATE FOR CLOSE TEMPERATURE CONTROLS.
29. FURNISH, INSTALL, AND WIRE NEW BACNET CONTROLLERS.
30. 110V POWER FOR ALL CONTROL DEVICES & PANELS BY ELECTRICAL CONTRACTOR. DIIV 18.
31. EXACT BACNET MS/TP NETWORK LAYOUT TO BE DETERMINED BY CONTROLS CONTRACTOR.
32. ALL LOW VOLTAGE HVAC CONTROLS WIRING IN NON-CONCEALED AND/OR NON-ACCESSABLE AREAS SHALL BE IN EMT CONDUIT.
33. CREATE EQUIPMENT GRAPHICS FOR ALL EQUIPMENT AND FLOOR PLAN GRAPHICS.

CONTROL LEGEND	
ABBR.	DESCRIPTION
A	ACTUATOR
AC	AIR CONDITIONER
ACCU	AIR COOLED CONDENSING UNIT
AI	ANALOG INPUT
AO	ANALOG OUTPUT
BI	BINARY INPUT
BO	BINARY OUTPUT
BMS	BUILDING MANAGEMENT SYSTEM
BACNET	BUILDING AUTOMATION AND CONTROL NETWORK
BD	BYPASS DAMPER
BP	BUILDING PRESSURE
CCN	CARRIER COMFORT NETWORK
CU	CONDENSING UNIT
CV	CONSTANT VOLUME
CO2	CARBON DIOXIDE
CSR	CURRENT SENSING RELAY
DPT	DIFFERENTIAL PRESSURE TRANSDUCER
D/X	DIRECT EXPANSION
E	EXISTING
EA	EXHAUST AIR
EAC	EXISTING AIR CONDITIONER
EF	EXHAUST FAN
FB	FEEDBACK
FLTR	FILTER
FCU	FAN COIL UNIT
HP	HEAT PUMP
HV	HEATING VENTILATION
H/X	HEAT EXCHANGER
IDF	NTERMEDIATE DISTRIBUTION FRAME
M	MANUAL
MDF	MAIN DISTRIBUTION FRAME
MS/TP	MASTER SLAVE / TOKEN PASS
NL	NETWORK LINK
NR	NETWORK ROUTER
N	NEW
OA	OUTSIDE AIR
OAT	OUTSIDE AIR TEMPERATURE
OAD	OUTSIDE AIR DAMPER
RA	RETURN AIR
RAT	RETURN AIR TEMPERATURE
RAD	RETURN AIR DAMPER
RH	RELATIVE HUMIDITY
RTU	ROOF TOP UNIT
SAC	SPLIT AIR CONDITIONER
SA	SUPPLY AIR
SD	SMOKE DETECTOR
SP	SUPPLY DUCT PRESSURE
SF	SUPPLY FAN
SAV	STAGED AIR VOLUME
SAT	SUPPLY AIR TEMPERATURE
SPD	SPEED
STAT	STATUS
S/S	START / STOP
TEMP	TEMPERATURE
TS	TEMPERATURE SENSOR
WMPU	WALL MOUNTED PACKAGE UNIT
WS	WEB SERVER
VVT	VARIABLE VOLUME, TEMPERATURE
VAV	VARIABLE AIR VOLUME
VFD	VARIABLE FREQUENCY DRIVE
ZD	ZONE DAMPER

ICON	DESCRIPTION	ICON	DESCRIPTION
	– FAN		– ENTHALPY SENSOR
	– HEATING COIL – COOLING COIL – HEAT EXCHANGER		– SPACE SENSOR
	– BAROMETRIC DAMPER – AIR HOOD		– PRESSURE SENSOR
	TEMPERATURE SENSOR		– DIFFERENTIAL PRESSURE SENSOR
	– FILTER		– CURRENT SENSOR
	– ECONOMIZER		– ACTUATED DAMPER

EMCS RISER DIAGRAM

SCALE NONE

1

ARCHITECTS
WLC
CLIENT FOCUSED • PASSION DRIVEN

SOUTHERN CALIFORNIA
8163 ROCHESTER AVENUE, SUITE 100
RANCHO CUCAMONGA
CALIFORNIA 91730-0729

TEL: 909-987-0909

www.wlcarchitects.com

LONGFELLOW ELEMENTARY SCHOOL HVAC REPLACEMENT

COMPTON UNIFIED SCHOOL DISTRICT
1101 S DWIGHT AVE.
COMPTON, CA 90220

LICENSED ARCHITECT
MARK GRAHAM
C-26046
03-31-19
STATE OF CALIFORNIA

REGISTERED PROFESSIONAL ENGINEER
BRIAN BANKHEAD
No. M29253
Exp. 6/30/19
MECHANICAL
STATE OF CALIFORNIA

CONSULTANT

IDENTIFICATION STAMP
DIV. OF THE STATE ARCHITECT
OFFICE OF REGULATION SERVICES
APPL 03-118423
AC FLS SS KEY
DATE MAR 04 2019
FILE: 19-23

NO	DATE	BY	DESCRIPTION
1			REVISIONS

DRAWN: KC
CHECKED:
DATE: 3/6/2018
SCALE:
PROJECT NUMBER: 570064

WIRING DIAGRAM DETAILS

DRAWING NUMBER: M-5.1

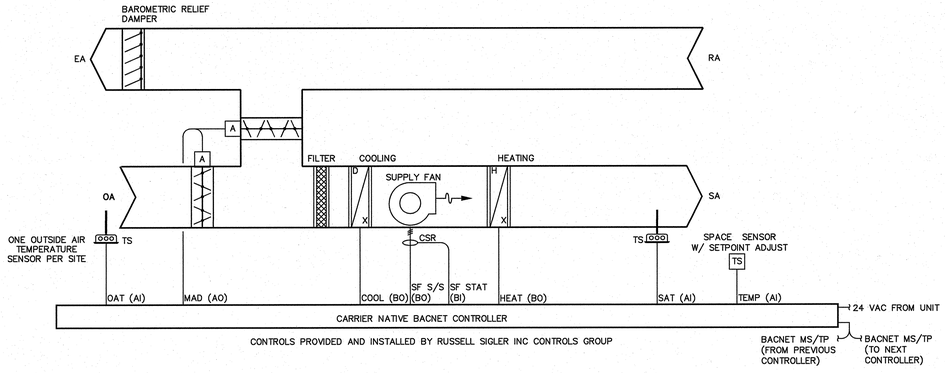

SEQUENCE OF OPERATION

INDOOR FAN
DURING OCCUPIED PERIODS, FAN SHALL OPERATE CONTINUOUSLY. DURING UNOCCUPIED PERIODS, FAN SHALL OPERATE WHEN THE SPACE TEMPERATURE EXCEEDS THE UNOCCUPIED HEATING OR COOLING SETPOINTS.

SINGLE SPEED
THE FAN OPERATES AT ONE SPEED ONLY AND PROVIDES ON/OFF OPERATION.

HEATING MODE
THE CONTROLLER WILL MEASURE THE ZONE TEMPERATURE AND STAGE THE HEATING TO MAINTAIN ITS HEATING SETPOINT. TO PREVENT SHORT CYCLING, THE STAGE WILL HAVE A USER DEFINABLE (ADJ.) MINIMUM RUNTIME. THE HEATING WILL BE ENABLED WHENEVER: OUTSIDE AIR TEMPERATURE IS LESS THAN 65°F (ADJ.), THE ZONE TEMPERATURE IS BELOW HEATING SETPOINT, THE SUPPLY FAN STATUS IS ON, AND THE COOLING IS NOT ACTIVE.

COOLING MODE
THE CONTROLLER WILL MEASURE THE ZONE TEMPERATURE AND STAGE THE COOLING TO MAINTAIN ITS COOLING SETPOINT. TO PREVENT SHORT CYCLING, THE STAGE WILL HAVE A USER DEFINABLE (ADJ.) MINIMUM RUNTIME. THE COOLING WILL BE ENABLED WHENEVER: OUTSIDE AIR TEMPERATURE IS GREATER THAN 60°F (ADJ.), THE ECONOMIZER IS DISABLED OR FULLY OPEN, THE ZONE TEMPERATURE IS ABOVE COOLING SETPOINT, THE SUPPLY FAN STATUS IS ON, AND THE HEATING IS NOT ACTIVE.

ECONOMIZER
THE FOLLOWING CONDITIONS MUST BE TRUE FOR ECONOMIZER OPERATION:
- THE OUTDOOR AIR TEMPERATURE IS LESS THAN THE SPACE TEMPERATURE AND LESS THAN 75°F (ADJ.)
- THE INDOOR FAN IS ON
- THE UNIT HAS A VALID SUPPLY AIR TEMPERATURE INPUT

THE ECONOMIZER MINIMUM POSITION IS ADJUSTED TO PROVIDE A CONSTANT AMOUNT OF OUTDOOR AIR. IF THE FAN IS ON HIGH SPEED, THE ECONOMIZER MINIMUM POSITION WILL BE SET TO 20% OPEN (ADJ.). IF THE FAN IS ON LOW SPEED, THE ECONOMIZER MINIMUM POSITION WILL BE SET TO 33% OPEN (ADJ.).

IF ALL PRECEDING CONDITIONS ARE TRUE, THE ECONOMIZER PID LOOP MODULATES THE DAMPER BETWEEN THE MINIMUM POSITION AND 100% OPEN.

DURING ECONOMIZER OPERATION, THE ECONOMIZER POSITION IS REDUCED AS THE SAT FALLS BELOW 50°F ± 5°F, BUT NEVER CLOSES BELOW THE APPLICABLE MINIMUM POSITION.

SINGLE ZONE CONSTANT AIR VOLUME ROOFTOP UNIT DETAIL (AC1-A)

SCALE NONE 1

ARCHITECTS
WLC
CLIENT FOCUSED • PASSION DRIVEN
SOUTHERN CALIFORNIA
8163 ROCHESTER AVENUE, SUITE 100
RANCHO CUCAMONGA
CALIFORNIA 91730-0729
TEL: 909-987-0909
www.wlcarchitects.com

LONGFELLOW ELEMENTARY SCHOOL
HVAC REPLACEMENT
COMPTON UNIFIED SCHOOL DISTRICT
1101 S DWIGHT AVE.
COMPTON, CA 90220

LICENSED ARCHITECT MARK GRAHAM C-26046 03-31-19 STATE OF CALIFORNIA

REGISTERED PROFESSIONAL ENGINEER ABBY BANERJEE No. M29253 Exp. 6/30/19 MECHANICAL STATE OF CALIFORNIA

CONSULTANT

IDENTIFICATION STAMP
DIV. OF THE STATE ARCHITECT
OFFICE OF REGULATION SERVICES
APPL 03-118423
AC ___ FLS ___ SS ___
DATE MAR 06 2019
FILE: 19-23

NO	DATE	BY	DESCRIPTION

REVISIONS

DRAWN: KC	CHECKED:
DATE: 3/6/2018	SCALE:
PROJECT NUMBER: 570064	

WIRING DIAGRAM DETAILS

DRAWING NUMBER: M-5.2

EXISTING TRANE UNIT

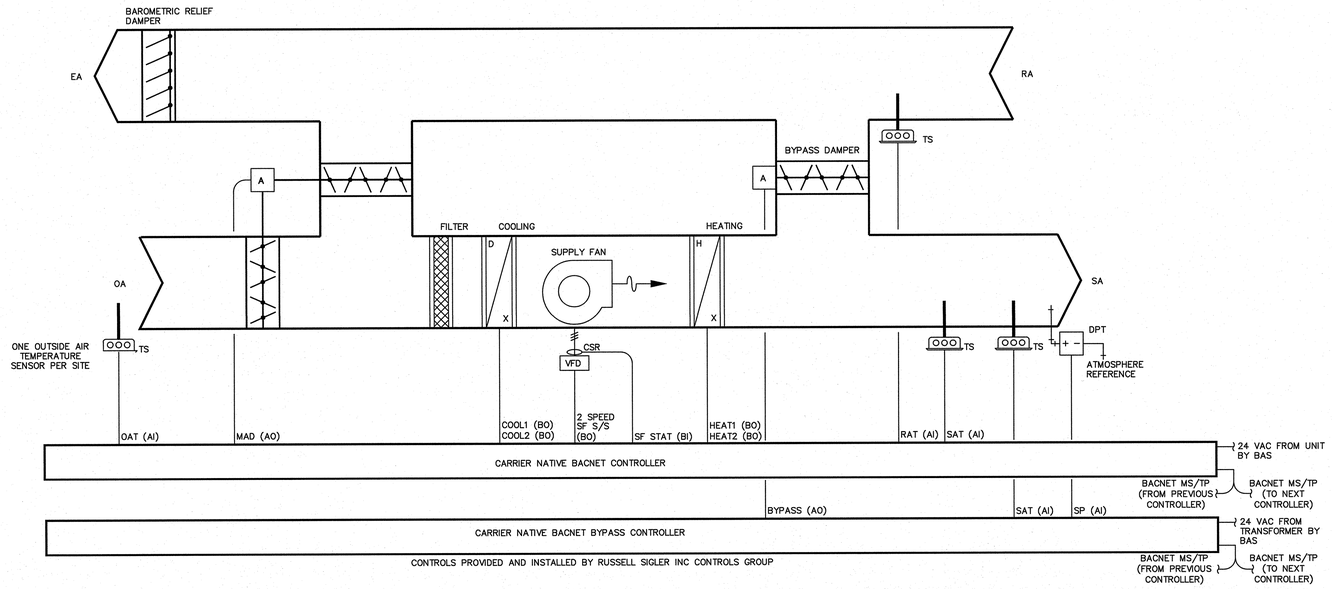

CHANGEOVER/BYPASS SYSTEM

VWT ROOFTOP UNIT AND BYPASS DAMPER DETAIL [(E)AC1-E AND BD1-E]

SCALE NONE 1

SEQUENCE OF OPERATION

INDOOR FAN
DURING OCCUPIED PERIODS, THE FAN SHALL OPERATE CONTINUOUSLY. DURING UNOCCUPIED PERIODS, THE FAN SHALL OPERATE WHEN THE SPACE TEMPERATURE EXCEEDS THE UNOCCUPIED HEATING OR COOLING SETPOINTS. THE FAN OPERATES AT 1 OF 2 SPEEDS DEPENDING ON THE MODE OF OPERATION AND LOAD CONDITIONS. DURING VENT ONLY MODE AND LOW LOAD CONDITIONS, THE FAN OPERATES AT LOW SPEED. IF LOAD CONDITIONS INCREASE OR IF THERE IS A CALL FOR HEATING, THE FAN OPERATES AT HIGH SPEED.

HEATING MODE
THE CONTROLLER WILL STAGE THE HEATING TO MAINTAIN ITS DISCHARGE AIR TEMPERATURE HEATING SETPOINT. TO PREVENT SHORT CYCLING, THE STAGE WILL HAVE A USER DEFINABLE (ADJ.) MINIMUM RUNTIME. THE HEATING WILL BE ENABLED BY LINKAGE MASTER (SEE TERMINAL DETAIL BELOW).

COOLING MODE
THE CONTROLLER WILL STAGE THE COOLING TO MAINTAIN ITS DISCHARGE AIR TEMPERATURE COOLING SETPOINT. TO PREVENT SHORT CYCLING, THE STAGE WILL HAVE A USER DEFINABLE (ADJ.) MINIMUM RUNTIME. THE COOLING WILL BE ENABLED BY LINKAGE MASTER (SEE TERMINAL DETAIL BELOW).

ECONOMIZER
THE FOLLOWING CONDITIONS MUST BE TRUE FOR ECONOMIZER OPERATION:
- THE OUTDOOR AIR TEMPERATURE IS LESS THAN THE SPACE TEMPERATURE AND LESS THAN 75°F (ADJ.)
- THE INDOOR FAN IS ON
- THE UNIT HAS A VALID SUPPLY AIR TEMPERATURE INPUT

THE ECONOMIZER MINIMUM POSITION IS ADJUSTED TO PROVIDE A CONSTANT AMOUNT OF OUTDOOR AIR. IF THE FAN IS ON HIGH SPEED, THE ECONOMIZER MINIMUM POSITION WILL BE SET TO 20% OPEN (ADJ.). IF THE FAN IS ON LOW SPEED, THE ECONOMIZER MINIMUM POSITION WILL BE SET TO 33% OPEN (ADJ.).

IF ALL PRECEDING CONDITIONS ARE TRUE, THE ECONOMIZER PID LOOP MODULATES THE DAMPER BETWEEN THE MINIMUM POSITION AND 100% OPEN.

DURING ECONOMIZER OPERATION, THE ECONOMIZER POSITION IS REDUCED AS THE SAT FALLS BELOW 50°F ± 5°F, BUT NEVER CLOSES BELOW THE APPLICABLE MINIMUM POSITION.

VVT BYPASS DAMPER
WHILE THE INDOOR FAN RUNS, THE BYPASS SHALL MODULATE TO MAINTAIN DUCT PRESSURE AT A CONFIGURABLE SETPOINT. IF THE STATIC PRESSURE IS BELOW THE STATIC PRESSURE SETPOINT THE BYPASS DAMPER WILL MODULATE CLOSE TO BUILD DUCT STATIC PRESSURE UNTIL THE STATIC PRESSURE IS AT SETPOINT. IF THE STATIC PRESSURE IS ABOVE THE STATIC PRESSURE SETPOINT THE BYPASS DAMPER WILL MODULATE OPEN TO RELIEVE DUCT STATIC PRESSURE UNTIL THE STATIC PRESSURE IS AT SETPOINT.

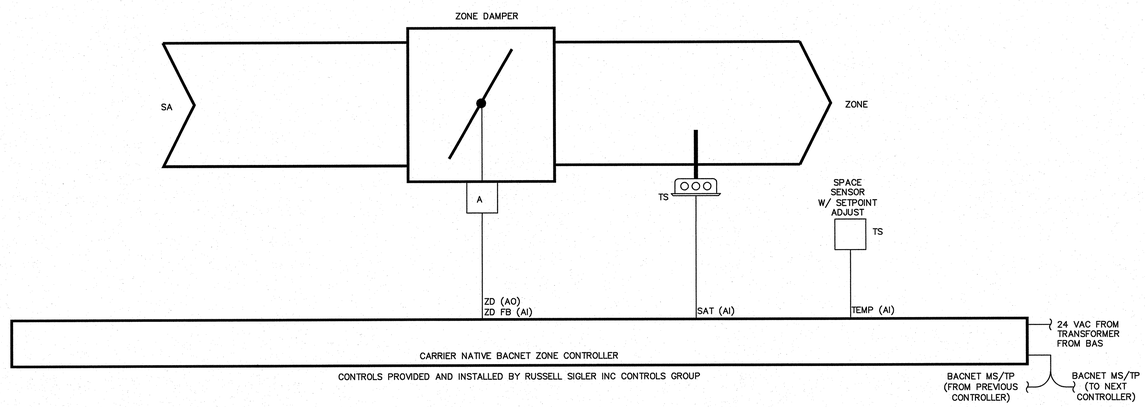

CHANGEOVER/BYPASS SYSTEM

SEQUENCE OF OPERATION

LINKAGE
THE CONTROL SYSTEM USES LINKAGE TO EXCHANGE DATA BETWEEN THE ZONE TERMINALS AND THEIR AIR SOURCE TO FORM A COORDINATED HVAC SYSTEM. THE SYSTEM'S AIR SOURCE CONTROLLER, ZONE CONTROLLERS, AND BYPASS CONTROLLER ARE LINKED SO THAT THEIR DATA EXCHANGE CAN BE MANAGED BY ONE ZONE CONTROLLER CONFIGURED AS THE VVT MASTER. THE VVT MASTER GATHERS THE FOLLOWING INFORMATION FROM THE SLAVE ZONE CONTROLLERS: OCCUPANCY STATUS, SETPOINTS, ZONE TEMPERATURE, DAMPER POSITION, AND OPTIMAL START DATA.

LINKAGE MASTER (HIGHEST ADDRESSED ZONE CONTROLLER IN VVT SYSTEM, TO BE DETERMINED BY CONTROLS CONTRACTOR)
THE VVT MASTER DETERMINES SYSTEM OPERATION BY PRIORITIZING HEATING AND COOLING REQUIREMENTS FROM ALL THE ZONES BASED ON THEIR OCCUPANCY AND DEMAND. THE VVT MASTER SCANS THE SYSTEM CONTINUOUSLY TO DETERMINE IF ANY ZONES ARE OCCUPIED.

ESTABLISHING COOLING MODE
THE VVT MASTER WILL SCAN ALL ZONES TO COLLECT SYSTEM TEMPERATURE DEMAND DATA. DEMAND SHALL BE THE DIFFERENCE BETWEEN THE ZONE SETPOINT AND THE ACTUAL ZONE TEMPERATURE. THE REFERENCE ZONE, DURING EACH SCAN, SHALL BE THE ZONE WITH THE GREATEST COOLING OR HEATING DEMAND. ZONE CALLERS SHALL BE DETERMINE BY THE TOTAL NUMBER OF ZONES WITH COOLING OR HEATING DEMANDS OF 1.5°F OR MORE ABOVE THE ZONES.

IF THE TOTAL NUMBER OF ZONES REQUESTING COOLING OUTNUMBER THOSE REQUESTING HEATING, AND THE OUTSIDE AIR TEMPERATURE IS ABOVE THE COOLING LOCKOUT LIMIT OF 60°F (ADJ.), THE VVT MASTER SHALL REQUEST THE CENTRAL UNIT TO ENTER THE COOLING MODE. ALL ZONES REQUIRING HEATING SHALL POSITION THEIR ZONE DAMPERS TO THEIR CONFIGURED MINIMUM DAMPER POSITION WITH THE CENTRAL UNIT IN THE COOLING MODE.

SWITCHING TO HEATING
IF THE TOTAL NUMBER OF ZONES REQUESTING HEATING OUTNUMBER THOSE REQUESTING COOLING, AND THE OUTSIDE AIR TEMPERATURE IS BELOW THE HEATING LOCKOUT LIMIT OF 65°F (ADJ.), THE VVT MASTER SHALL REQUEST THE CENTRAL UNIT TO ENTER THE HEATING MODE. ALL ZONES REQUIRING COOLING SHALL POSITION THEIR ZONE DAMPERS TO THEIR CONFIGURED MINIMUM OR VENTILATION DAMPER POSITION DURING SYSTEM CHANGE-OVER.

VVT ZONE DAMPER
DURING OCCUPIED PERIODS, THE ZONE CONTROLLER WILL OPEN AND CLOSE TO MAINTAIN SPACE TEMPERATURE WITHIN SETPOINTS. IF THE MODE OF THE UNIT MATCHES THE DEMAND OF THE ZONE, THE DAMPER WILL OPEN PROPORTIONALLY TO SPACE TEMPERATURE (DIRECT ACTING FOR COOLING, REVERSE ACTING FOR HEATING). IF THE ZONE IS AT SETPOINT AND THE DUCT TEMPERATURE IS NEUTRAL, THE DAMPER WILL OPEN FOR VENTILATION. OTHERWISE, THE ZONE DAMPER WILL GO TO ITS MINIMUM POSITION.

AIR TERMINAL DETAIL (ZD1-E THRU ZD5-E)

SCALE NONE 2

ARCHITECTS
WLC
CLIENT FOCUSED • PASSION DRIVEN

SOUTHERN CALIFORNIA
8163 ROCHESTER AVENUE, SUITE 100
RANCHO CUCAMONGA
CALIFORNIA 91730-0729

TEL: 909-987-0909

www.wlcarchitects.com

LONGFELLOW ELEMENTARY SCHOOL HVAC REPLACEMENT

COMPTON UNIFIED SCHOOL DISTRICT

1101 S DWIGHT AVE.
COMPTON, CA 90220

LICENSED ARCHITECT MARK GRAHAM C-26046 03-31-19 STATE OF CALIFORNIA

REGISTERED PROFESSIONAL ENGINEER ABBY BANDEKEH No. M29253 Exp. 6/30/19 MECHANICAL STATE OF CALIFORNIA

CONSULTANT

IDENTIFICATION STAMP
DIV. OF THE STATE ARCHITECT
OFFICE OF REGULATION SERVICES
APPL 03-118423
AC FLS SS EV
DATE MAR 26 2018
FILE: 19-23

NO	DATE	BY	DESCRIPTION
			REVISIONS

DRAWN: KC	CHECKED:
DATE: 3/6/2018	SCALE:
PROJECT NUMBER: 570064	

WIRING DIAGRAM DETAILS

DRAWING NUMBER: M-5.3

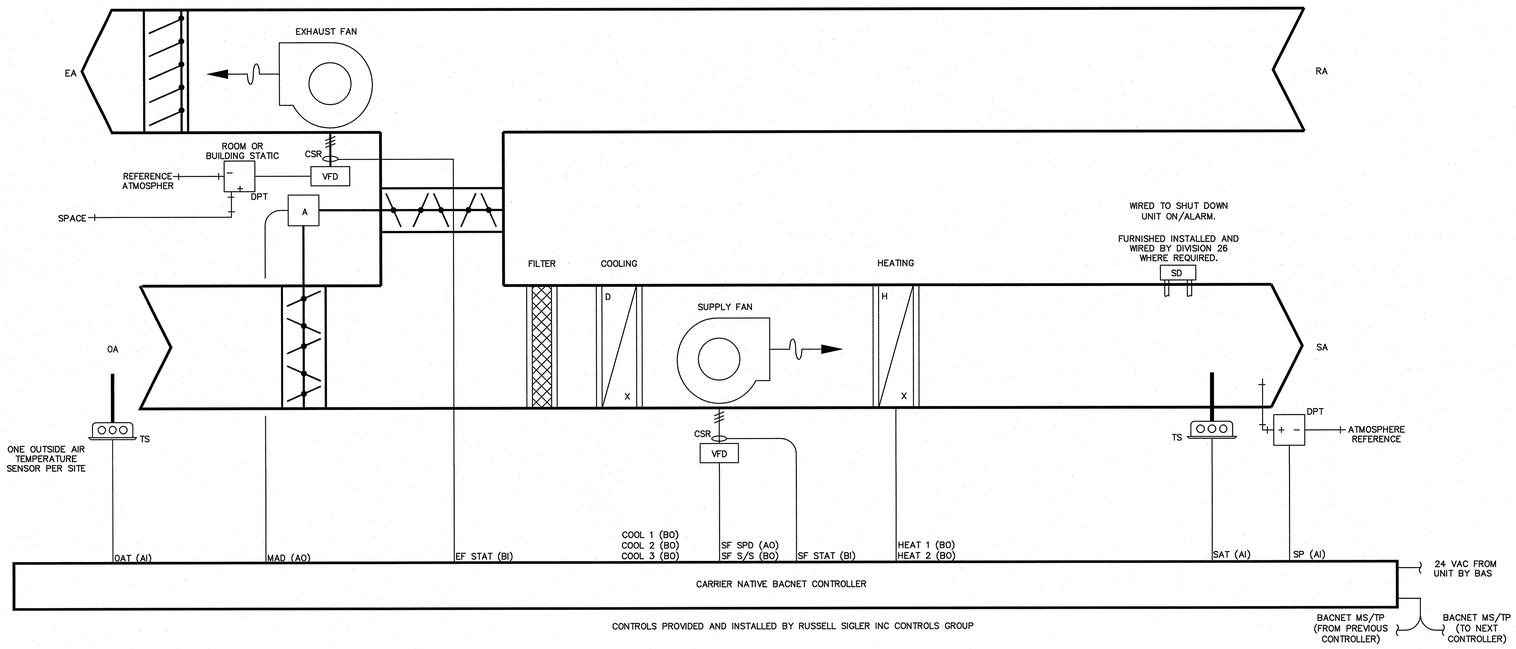

VARIABLE AIR VOLUME ROOFTOP UNIT DETAIL (AC1-C, AC1-D, AC1-F, AC1-G AND AC1-K)

SCALE NONE 1

SEQUENCE OF OPERATION

SUPPLY FAN
DURING OCCUPIED PERIODS, THE SUPPLY FAN SHALL OPERATE CONTINUOUSLY. DURING UNOCCUPIED PERIODS, THE SUPPLY FAN SHALL OPERATE WHEN THE SPACE TEMPERATURE EXCEEDS THE UNOCCUPIED HEATING OR COOLING SETPONTS .THE SUPPLY FAN SHALL MODULATE TO MAINTAIN A DUCT STATIC PRESSURE SETPOINT OF 0.5 INCH WC (ADJ.).

HEATING MODE
THE CONTROLLER WILL MEASURE THE ZONE TEMPERATURE AND STAGE THE HEATING TO MAINTAIN ITS DISCHARGE AIR TEMPERATURE HEATING SETPOINT. TO PREVENT SHORT CYCLING, THE STAGE WILL HAVE A USER DEFINABLE (ADJ.) MINIMUM RUNTIME. THE HEATING WILL BE ENABLED BY LINKAGE MASTER (SEE AIR TERMINAL DETAIL BELOW).

COOLING MODE
THE CONTROLLER STAGE THE COOLING TO MAINTAIN ITS DISCHARGE AIR TEMPERATURE COOLING SETPOINT. TO PREVENT SHORT CYCLING, THE STAGE WILL HAVE A USER DEFINABLE (ADJ.) MINIMUM RUNTIME. THE COOLING WILL BE ENABLED BY LINKAGE MASTER (SEE AIR TERMINAL DETAIL BELOW).

ECONOMIZER
THE FOLLOWING CONDITIONS MUST BE TRUE FOR ECONOMIZER OPERATION:
- THE OUTDOOR AIR TEMPERATURE IS LESS THAN THE SPACE TEMPERATURE AND LESS THAN 75°F (ADJ.)
- THE INDOOR FAN IS ON
- THE UNIT HAS A VALID SUPPLY AIR TEMPERATURE INPUT

THE ECONOMIZER MINIMUM POSITION IS ADJUSTED TO PROVIDE A CONSTANT AMOUNT OF OUTDOOR AIR. THE CONTROLLER WILL DETERMINE THE REQUIRED MINIMUM ECONOMIZER POSITION (0–100%) BASED ON THE FAN'S ACTUAL OPERATION SPEED. IF THE FAN OPERATES AT MAXIMUM SPEED, THE ECONOMIZER MINIMUM POSITION WILL BE SET TO 20% (ADJ.). WHEN THE FAN OPERATES AT ITS LOWEST SPEED, THE ECONOMIZER MINIMUM POSITION WILL BE SET TO 33% (ADJ.). FOR ANY FAN SPEED BETWEEN THE MINIMUM AND MAXIMUM SPEEDS, THE CONTROLLER SHALL CALCULATE A MINIMUM ECONOMIZER POSITION BY A LINEAR INTERPOLATION BETWEEN THESE TWO VALUES. WHEN COOLING IS REQUIRED, IF ALL PRECEDING CONDITIONS ARE TRUE, THE ECONOMIZER PID LOOP MODULATES THE DAMPER BETWEEN THE MINIMUM POSITION AND 100% OPEN TO MAINTAIN THE SUPPLY AIR SETPOINT..

POWER EXHAUST
THE EXHAUST FAN SHALL BE ENABLED WHEN SUPPLY FAN IS RUNNING AND SHALL MODULATE TO MAINTAIN THE ROOM PRESSURE SET POINT (AS DETERMINED BY AIR BALANCER). NOT CONTROLLED THROUGH EMS.

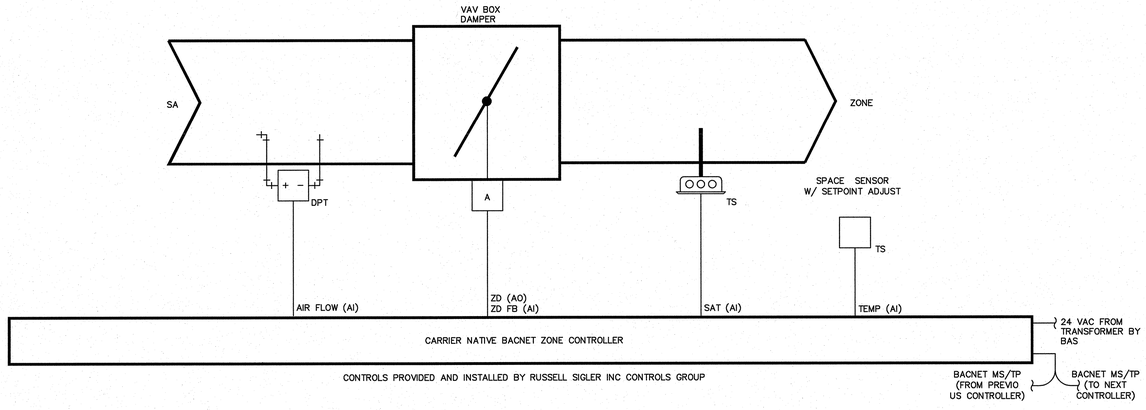

AIR TERMINAL DETAIL (TYPICAL VAV ZONE)

SCALE NONE 2

SEQUENCE OF OPERATION

LINKAGE
THE CONTROL SYSTEM USES LINKAGE TO EXCHANGE DATA BETWEEN THE ZONE TERMINALS AND THEIR AIR SOURCE TO FORM A COORDINATED HVAC SYSTEM. THE SYSTEM'S AIR SOURCE CONTROLLER AND ZONE CONTROLLERS ARE LINKED SO THAT THEIR DATA EXCHANGE CAN BE MANAGED BY ONE ZONE CONTROLLER CONFIGURED AS THE VAV MASTER. THE VAV MASTER GATHERS THE FOLLOWING INFORMATION FROM THE SLAVE ZONE CONTROLLERS: OCCUPANCY STATUS, SETPOINTS, ZONE TEMPERATURE, DAMPER POSITION, AND OPTIMAL START DATA.

LINKAGE MASTER OPERATION (HIGHEST ADDRESSED ZONE CONTROLLER IN VAV SYSTEM, TO BE DETERMINED BY CONTROLS CONTRACTOR)
THE VAV MASTER WILL SCAN THE ZONES FOR COOLING DEMAND, HEATING DEMAND, AND OCCUPANCY. THE LINKAGE MASTER WILL CALCULATE A WEIGHTED AVERAGE COOLING AND HEATING DEMAND SEPARATELY. IF ANY ZONE IN THE SYSTEM IS OCCUPIED, IT WILL SET THE UNIT TO OCCUPIED MODE AND SEND THE LARGEST DEMAND TO THE UNIT TO STAGE HEATING AND COOLING PROPERLY.

ESTABLISHING COOLING MODE
THE VAV MASTER WILL SCAN ALL ZONES TO COLLECT SYSTEM TEMPERATURE DEMAND DATA. DEMAND SHALL BE THE DIFFERENCE BETWEEN THE ZONE SETPOINT AND THE ACTUAL ZONE TEMPERATURE. THE REFERENCE ZONE, DURING EACH SCAN, SHALL BE THE ZONE WITH THE GREATEST COOLING OR HEATING DEMAND. ZONE CALLERS SHALL BE DETERMINE BY THE TOTAL NUMBER OF ZONES WITH COOLING OR HEATING DEMANDS OF 1.5°F OR MORE ABOVE THE ZONES.

IF THE TOTAL NUMBER OF ZONES REQUESTING COOLING OUTNUMBER THOSE REQUESTING HEATING, AND THE OUTSIDE AIR TEMPERATURE IS ABOVE THE COOLING LOCKOUT LIMIT OF 60°F (ADJ.), THE VAV MASTER SHALL REQUEST THE CENTRAL UNIT TO ENTER THE COOLING MODE. ALL ZONES REQUIRING HEATING SHALL POSITION THEIR ZONE DAMPERS TO THEIR CONFIGURED MINIMUM DAMPER POSITION WITH THE CENTRAL UNIT IN THE COOLING MODE.

SWITCHING TO HEATING
IF THE TOTAL NUMBER OF ZONES REQUESTING HEATING OUTNUMBER THOSE REQUESTING COOLING, AND THE OUTSIDE AIR TEMPERATURE IS BELOW THE HEATING LOCKOUT LIMIT OF 65°F (ADJ.), THE VAV MASTER SHALL REQUEST THE CENTRAL UNIT TO ENTER THE HEATING MODE. ALL ZONES REQUIRING COOLING SHALL POSITION THEIR ZONE DAMPERS TO THEIR CONFIGURED MINIMUM OR VENTILATION DAMPER POSITION DURING SYSTEM CHANGE–OVER.

VAV ZONE CONTROLLER
PROVIDES PRESSURE–INDEPENDENT ZONE TEMPERATURE CONTROL BY MODULATING ITS BUILT–IN DAMPER ACTUATOR TO CONTROL THE FLOW OF PRIMARY AIR INTO THE ZONE. THE DAMPER MODULATES THE AIRFLOW SETPOINT BETWEEN THE MODE'S CONFIGURABLE MINIMUM AND MAXIMUM AIRFLOW BASED ON THE OCCUPANCY STATUS OF THE ZONE. THIS MINIMUM INSURES SUFFICIENT MINIMUM AIRFLOW AT THE AIR SOURCE AND SUFFICIENT VENTILATION TO THE ZONE DURING OCCUPIED PERIODS. (DIRECT ACTING FOR COOLING, REVERSE ACTING FOR HEATING).

ARCHITECTS
WLC
CLIENT FOCUSED • PASSION DRIVEN

SOUTHERN CALIFORNIA
8163 ROCHESTER AVENUE, SUITE 100
RANCHO CUCAMONGA
CALIFORNIA 91730-0729

TEL: 909-987-0909

www.wlcarchitects.com

LONGFELLOW ELEMENTARY SCHOOL HVAC REPLACEMENT

COMPTON UNIFIED SCHOOL DISTRICT

1101 S DWIGHT AVE.
COMPTON, CA 90220

LICENSED ARCHITECT MARK GRAHAM C-26046 03-31-19 STATE OF CALIFORNIA

REGISTERED PROFESSIONAL ENGINEER ABBY BANDAREE No. M29253 Exp. 6/30/19 MECHANICAL STATE OF CALIFORNIA

CONSULTANT

IDENTIFICATION STAMP
DIV. OF THE STATE ARCHITECT
OFFICE OF REGULATION SERVICES
APPL 03-118423
AC FLS SS EY
DATE MAR 0 6 2018
FILE: 19-23

NO	DATE	BY	DESCRIPTION
1			REVISIONS

DRAWN: KC	CHECKED:
DATE: 3/6/2018	SCALE:
PROJECT NUMBER: 570064	

WIRING DIAGRAM DETAILS

DRAWING NUMBER: M-5.4

SYSTEM POINT LIST

SYSTEM POINT DESCRIPTION	POINT TYPE					ALARMS							
PACKAGED ROOFTOP UNIT – VVT WITH BYPASS – GAS/ELECTRIC	GRAPHIC	HARDWARE INPUT	HARDWARE OUTPUT	SOFTWARE POINT	DEFAULT VALUE	HIGH ANALOG	LOW ANALOG	BINARY	LATCH DIAGNOSTIC	SENSOR FAIL	COMMUNICATION FAIL	DIAGNOSTICS	NOTES:
UNIT ENABLE/DISABLE	X			X							X		
SYSTEM MODE	X												
SUPPLY FAN CONTROL	X	BO						X				FAN FAIL	
SUPPLY FAN STATUS	X	BI						X				FAN FAIL	
BYPASS DAMPER CONTROL	X	AO											
BYPASS DAMPER POSITION FEEDBACK	X	AI											
SUPPLY AIR TEMPERATURE	X	AI				X	X			X		SENSOR FAIL	
SUPPLY AIR TEMPERATURE COOLING SETPOINT	X			AV	65°F								
SUPPLY AIR TEMPERATURE HEATING SETPOINT	X			AV	110°F								
RETURN AIR TEMPERATURE	X	AI											
MIXED AIR TEMPERATURE	X	AI											
SUPPLY AIR DUCT STATIC PRESSURE	X	AI				X	X					SENSOR FAIL	
SUPPLY AIR DUCT STATIC PRESSURE SETPOINT	X			AV									
ECONOMIZER DAMPERS CONTROL	X	AO											
DAMPER POSITION FEEDBACK	X	AI		AV									
DAMPER MINIMUM POSITION SETPOINT	X	AO		AV	15%								
HEAT STAGES CONTROL	X	BO											EACH STAGE
OUTDOOR AIR TEMPERATURE	X	AI											NOTE 1.
OUTDOOR AIR HUMIDITY	X	AI											NOTE 1.
HEAT FAIL		BI						X					
DIRTY FILTER	X	BI						X				FILTER STATUS – DIRTY	
EVAPORATOR		AI								X		EVAPORATOR TEMPERATURE SENSOR FAIL	
LOW PRESSURE CONTROL		BI						X				LOW PRESSURE DIAGNOSTIC	
CONDENSER		AI								X		CONDENSER TEMPERATURE SENSOR FAIL	
COMPRESSOR TRIP	X	BI						X				COMPRESSOR DIAGNOSTIC	
COMPRESSOR CONTACTORS CONTROL	X	BO						X					EACH STAGE
COMPRESSOR CONTACTORS STATUS	X	BI						X					EACH STAGE
CONDENSER FAN CONTACT STATUS		BI						X					
RUNTIME – MAINTENANCE REQUIRED				BV	2000 HOURS							MAINTENANCE REQUIRED	
HEAT STATUS	X			BV									

GENERAL NOTES:

NOTE 1. CAN BE COMMUNICATED VALUE

SYSTEM POINT LIST

SYSTEM POINT DESCRIPTION	POINT TYPE					ALARMS							
PACKAGED ROOFTOP UNIT – VAV GAS/ELECTRIC	GRAPHIC	HARDWARE INPUT	HARDWARE OUTPUT	SOFTWARE POINT	DEFAULT VALUE	HIGH ANALOG	LOW ANALOG	BINARY	LATCH DIAGNOSTIC	SENSOR FAIL	COMMUNICATION FAIL	DIAGNOSTICS	NOTES:
UNIT ENABLE/DISABLE	X			X							X		
SYSTEM MODE	X												
SUPPLY FAN CONTROL	X	BO						X				FAN FAIL	
SUPPLY FAN STATUS	X	BI						X				FAN FAIL	
SUPPLY FAN VFD. MAX OCC.				AV	100%								
SUPPLY VFD SPEED CONTROL	X	AO											
SUPPLY VFD SPEED FEEDBACK	X	AI											
EXHAUST FAN STATUS	X	BI						X					
SUPPLY AIR TEMPERATURE	X	AI				X	X			X		SENSOR FAIL	
SUPPLY AIR TEMPERATURE COOLING SETPOINT	X			AV	65°F								
SUPPLY AIR TEMPERATURE HEATING SETPOINT	X			AV	110°F								
RETURN AIR TEMPERATURE	X	AI											
MIXED AIR TEMPERATURE	X	AI											
SUPPLY AIR DUCT STATIC PRESSURE	X	AI				X	X					SENSOR FAIL	
SUPPLY AIR DUCT STATIC PRESSURE SETPOINT	X			AV									
ECONOMIZER DAMPERS CONTROL	X	AO											
DAMPER POSITION FEEDBACK	X	AI		AV	15%								
DAMPER MINIMUM POSITION SETPOINT	X			AV	15%								
HEAT STAGES CONTROL	X	BO											EACH STAGE
OUTDOOR AIR TEMPERATURE	X	AI											NOTE 1.
OUTDOOR AIR HUMIDITY	X	AI											NOTE 1.
HEAT FAIL		BI						X					
DIRTY FILTER	X	BI						X				FILTER STATUS – DIRTY	
EVAPORATOR		AI								X		EVAPORATOR TEMPERATURE SENSOR FAIL	
LOW PRESSURE CONTROL		BI						X				LOW PRESSURE DIAGNOSTIC	
CONDENSER		AI								X		CONDENSER TEMPERATURE SENSOR FAIL	
COMPRESSOR TRIP	X	BI						X				COMPRESSOR DIAGNOSTIC	
COMPRESSOR CONTACTORS CONTROL	X	BO						X					EACH STAGE
COMPRESSOR CONTACTORS STATUS	X	BI						X					EACH STAGE
CONDENSER FAN CONTACT STATUS		BI						X					
RUNTIME – MAINTENANCE REQUIRED				BV	2000 HOURS							MAINTENANCE REQUIRED	
HEAT STATUS	X			BV									

GENERAL NOTES:

NOTE 1. CAN BE COMMUNICATED VALUE

SYSTEM POINT LIST

SYSTEM POINT DESCRIPTION	POINT TYPE					ALARMS							
Package Rooftop Unit Constant Volume Single Zone	GRAPHIC	HARDWARE INPUT	HARDWARE OUTPUT	SOFTWARE POINT	DEFAULT VALUE	HIGH ANALOG	LOW ANALOG	BINARY	LATCH DIAGNOSTIC	SENSOR FAIL	COMMUNICATION FAIL	DIAGNOSTICS	NOTES:
UNIT CONTROLLER COMMUNICATIONS	X										X		
SPACE SENSOR – TEMPERATURE	X	AI							X	X		TEMPERATURE SENSOR FAIL	
SPACE SENSOR – LOCAL SETPOINT	X	AI								X		LOCAL SETPOINT FAIL	
SPACE SENSOR – ON/CANCEL		BI											
SUPPLY FAN STATUS	X	BI								X		FAN FAIL	
SUPPLY FAN START/STOP	X		BO										
OCCUPIED COOLING SETPOINT	X			AV	74°F	110°F	40°F						
OCCUPIED HEATING SETPOINT	X			AV	71°F	105°F	40°F						
UNOCCUPIED COOLING SETPOINT	X			AV	85°F								
UNOCCUPIED HEATING SETPOINT	X			AV	60°F								
COMPRESSOR CONTROL	X		BO										
HEAT STATUS	X			X									EACH STAGE
MODE: HEAT/COOL	X			X									
HEATING SETPOINT	X			AV	68°f								
EXHAUST FAN STATUS	X	BI								X		FAN FAIL	
EXHAUST MODE	X			BV									
CONDENSER FAN STATUS	X	BI											CONDENSER FANS A & B
SUPPLY AIR TEMPERATURE	X	AI								X			
COOLING STAGES ACTIVE	X			X									EACH STAGE
ECONOMIZER DAMPER POSITION COMMAND	X		AO										
ECONOMIZER DAMPER POSITION	X	AI											
ECONOMIZER MINIMUM POSITION SETPOINT	X			AV	15%								
OUTDOOR AIR TEMPERATURE	X	AI								X			
RETURN AIR TEMPERATURE	X	AI								X			
CO2 CONCENTRATION – SPACE	X	AI											
TIMED OVERRIDE REQUEST		BI											
TIMED OVERRIDE REQUEST CANCEL		BI											
OCCUPY/UNOCCUPY MODE	X												
PRIORITY SHUTDOWN	X							X					
DIRTY FILTER	X							X					
MANUAL RESET REQUIRED	X								X				

GENERAL NOTES:

SYSTEM POINT LIST

SYSTEM POINT DESCRIPTION	POINT TYPE					ALARMS							
VAV TERMINAL UNIT WITH DDC CONTROLS	GRAPHIC	HARDWARE INPUT	HARDWARE OUTPUT	SOFTWARE POINT	DEFAULT VALUE	HIGH ANALOG	LOW ANALOG	BINARY	LATCH DIAGNOSTIC	SENSOR FAIL	COMMUMICATION FAIL	DIAGNOSTICS	NOTES:
SPACE SENSOR – TEMPERATURE	X	AI							X	X		TEMP SENSOR FAIL	
SPACE SENSOR – SETPOINT	X	AI								X		LOCAL SETPOINT FAIL	
SPACE SENSOR – ON/CANCEL		BI											
AIRFLOW CFM	X	AI								X		SENSOR FAIL	
DAMPER	X		AO										
SUPPLY AIR TEMPERATURE SENSOR	X	AI				110°F	35°F		X	X		TEMP SENSOR FAIL	
MINIMUM COOLING AIRFLOW SETPOINT	X			AV									SEE VAV SCHEDULE FOR VALUES
MAXIMUM COOLING AIRFLOW SETPOINT				AV									SEE VAV SCHEDULE FOR VALUES
MINIMUM HEATING AIRFLOW SETPOINT	X			AV									SEE VAV SCHEDULE FOR VALUES
MAXIMUM HEATING AIRFLOW SETPOINT				AV									SEE VAV SCHEDULE FOR VALUES
OCCUPIED COOLING SETPOINT	X			AV	74°F	110°F	40°F						
OCCUPIED HEATING SETPOINT	X			AV	71°F	105°F	40°F						
UNOCCUPIED COOLING SETPOINT	X			AV	85°F								
UNOCCUPIED HEATING SETPOINT	X			AV	60°F								
OCCUPIED BY-PASS TIME OVERRIDE				AV	2 HOURS								
BAS COMMUNICATION STATE	X			BV							X		
SPACE CARBON DIOXIDE SENSOR	X	AI				600 PPM				X			WHERE SHOWN OM MECHANICAL DRAWINGS

GENERAL NOTES:

SYSTEM POINT LIST

SYSTEM POINT DESCRIPTION	POINT TYPE					ALARMS							
VVT ZONE DAMPERS WITH DDC CONTROLS	GRAPHIC	HARDWARE INPUT	HARDWARE OUTPUT	SOFTWARE POINT	DEFAULT VALUE	HIGH ANALOG	LOW ANALOG	BINARY	LATCH DIAGNOSTIC	SENSOR FAIL	COMMUMICATION FAIL	DIAGNOSTICS	NOTES:
SPACE SENSOR – TEMPERATURE	X	AI							X	X		TEMPERATURE SENSOR FAIL	
SPACE SENSOR – SETPOINT	X	AI								X		LOCAL SETPOINT FAIL	
SPACE SENSOR – ON/CANCEL		BI											
DAMPER	X		AO										
SUPPLY AIR TEMPERATURE SENSOR	X	AI				110°F	35°F		X	X		TEMPERATURE SENSOR FAIL	
MINIMUM COOLING DAMPER POSITION SETPOINT	X			AV									SEE VAV SCHEDULE FOR VALUES
MAXIMUM COOLING DAMPER POSITION SETPOINT				AV									SEE VAV SCHEDULE FOR VALUES
MINIMUM HEATING DAMPER POSITION SETPOINT	X			AV									SEE VAV SCHEDULE FOR VALUES
MAXIMUM HEATING DAMPER POSITION SETPOINT				AV									SEE VAV SCHEDULE FOR VALUES
OCCUPIED COOLING SETPOINT	X			AV	74°F	110°F	40°F						
OCCUPIED HEATING SETPOINT	X			AV	71°F	105°F	40°F						
UNOCCUPIED COOLING SETPOINT	X			AV	85°F								
UNOCCUPIED HEATING SETPOINT	X			AV	60°F								
MODE: HEATING/COOLING	X			AV	2 HOURS								
OCCUPIED BY-PASS TIME OVERRIDE				AV	2 HOURS								
BAS COMMUNICATION STATE	X			BV							X		
SPACE CARBON DIOXIDE SENSOR	X	AI				600 PPM				X			WHERE SHOWN ON MECHANICAL DRAWINGS

GENERAL NOTES:

SYSTEM POINT LIST

SCALE NONE 1

ARCHITECTS WLC

CLIENT FOCUSED • PASSION DRIVEN

SOUTHERN CALIFORNIA
8163 ROCHESTER AVENUE, SUITE 100
RANCHO CUCAMONGA
CALIFORNIA 91730-0729

TEL: 909-987-0909

www.wlcarchitects.com

LONGFELLOW ELEMENTARY SCHOOL HVAC REPLACEMENT

COMPTON UNIFIED SCHOOL DISTRICT

1101 S DWIGHT AVE.
COMPTON, CA 90220

LICENSED ARCHITECT MARK GRAHAM C-26046 03-31-19 STATE OF CALIFORNIA

REGISTERED PROFESSIONAL ENGINEER ABBY BANERJEE No. M29253 Exp. 6/30/19 MECHANICAL STATE OF CALIFORNIA

CONSULTANT

IDENTIFICATION STAMP
DIV. OF THE STATE ARCHITECT
OFFICE OF REGULATION SERVICES
APPL 03-118423
AC — FLS ✓ SS EY
DATE MAR 0 6 2018
FILE: 19-23

NO	DATE	BY	DESCRIPTION
#	REVISIONS		

DRAWN: KC	CHECKED:
DATE: 3/6/2018	SCALE:
PROJECT NUMBER: 570064	

SYSTEM POINT LISTS

DRAWING NUMBER: M-5.5

Project Name:	Longfellow Elementary School - Building A	NRCC-PRF-01-E	Page 2 of 18
Project Address:	1101 S DWIGHT AVE, COMPTON 90220	Calculation Date/Time:	08:15, Mon, Oct 02, 2017
Compliance Scope:	Existing/Alteration	Input File Name:	2017-09-11 Longfellow ES BLDG. A - T-24.cbd16e

A. PROJECT GENERAL INFORMATION

1.	Project Location (city)	COMPTON	8.	Standards Version	Compliance2016
2.	CA Zip Code	90220	9.	Compliance Software (version)	EnergyPro 7.1
3.	Climate Zone	8	10.	Weather File	NEWTONDISS-NSRDB#DP-FLD_722956_CZ2010.epw
4.	Total Conditioned Floor Area In Scope	1,854 ft²	11.	Building Orientation (deg)	29.0 deg
5.	Total Unconditioned Floor Area	692 ft²	12.	Permitted Scope of Work	Existing/Alteration
6.	Total # of Stories (Maintable Above Grade)	1	13.	Building Type(s)	Nonresidential
7.	Total # of dwelling units	0	14.	Elev Type	Naturalvlue

B. COMPLIANCE RESULTS FOR PERFORMANCE COMPONENTS (Annual TDV Energy Use, kBtu/ft²-yr) — § 140.1

BUILDING COMPLIES

1. Energy Component	2. Standard Design (TDV)	3. Proposed Design (TDV)	4. Compliance Margin (TDV)	5. Percent Better than Standard
Space Heating	1.91	2.84	-1.03	-53.9%
Space Cooling	76.69	73.08	3.59	4.7%
Indoor Fans	149.28	63.93	85.35	57.2%
Heat Rejection	--	--	--	--
Pumps & Misc.	--	--	--	--
Domestic Hot Water	6.65	--	--	0.0%
Indoor Lighting	41.86	--	--	0.0%
COMPLIANCE TOTAL	**276.39**	**188.74**	**87.65**	**31.7%**
Receptacle	328.39	358.39	0.0	0.0%
Process	--	--	--	--
Other Ltg.	--	--	--	--
TOTAL	**604.79**	**357.13**	**87.7**	**22.8%**

CA Building Energy Efficiency Standards- 2016 Nonresidential Compliance — Report Version: NRCC-PRF-01-E-08082017-4377 — Report Generated at: 2017-10-02 08:21:55

Project Name:	Longfellow Elementary School - Building A	NRCC-PRF-01-E	Page 3 of 18
Project Address:	1101 S DWIGHT AVE, COMPTON 90220	Calculation Date/Time:	08:15, Mon, Oct 02, 2017
Compliance Scope:	Existing/Alteration	Input File Name:	2017-09-11 Longfellow ES BLDG. A - T-24.cbd16e

C. PRIORITY PLAN CHECK/ INSPECTION ITEMS (In order of highest to lowest TDV energy savings)

1st	Indoor Fans; Check envelope and mechanical
2nd	Space Cooling; Check envelope and mechanical
3rd	Heat Rejection; Check envelope and mechanical
4th	Pumps & Misc.; Check mechanical
5th	Domestic Hot Water; Check mechanical
6th	Indoor Lighting; Check lighting
7th	Space Heating; Check envelope and mechanical

Compliance Margin By Energy Component (from Table B column 4)

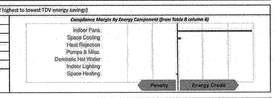

D. EXCEPTIONAL CONDITIONS

The building does not include service water heating. Verify that service water heating is not required and is not included in the design.

E. HERS VERIFICATION

This Section Does Not Apply

F. ADDITIONAL REMARKS

None Provided.

CA Building Energy Efficiency Standards- 2016 Nonresidential Compliance — Report Version: NRCC-PRF-01-E-08082017-4377 — Report Generated at: 2017-10-02 08:21:55

Project Name:	Longfellow Elementary School - Building A	NRCC-PRF-01-E	Page 4 of 18
Project Address:	1101 S DWIGHT AVE, COMPTON 90220	Calculation Date/Time:	08:15, Mon, Oct 02, 2017
Compliance Scope:	Existing/Alteration	Input File Name:	2017-09-11 Longfellow ES BLDG. A - T-24.cbd16e

G. COMPLIANCE PATH & CERTIFICATE OF COMPLIANCE SUMMARY

Identify which building components use the performance or prescriptive path for compliance. "NA" = not in project.
For components that utilize the performance path, indicate the sheet number that includes mandatory notes on plans.

Building Component	Compliance Path	Compliance Forms (required for submittal)	Location of Mandatory Notes on Plans
Envelope	☑	Performance — NRCC-PRF-ENV-DETAILS (section of the NRCC-PRF-01-E)	
	☐	Prescriptive — NRCC-ENV-01 / 02 / 03 / 04 / 05 / 06 / 07-E	
	☐	NA	
Mechanical	☑	Performance — NRCC-PRF-MCH-DETAILS (section of the NRCC-PRF-01-E)	
	☐	Prescriptive — NRCC-MCH-01 / 02 / 03 / 04 / 05 / 06 / 07-E	
	☐	NA	
Domestic Hot Water	☐	Performance — NRCC-PRF-PLB-DETAILS (section of the NRCC-PRF-01-E)	
	☑	Prescriptive — NRCC-PLB-01-E	
	☐	NA	
Lighting (Indoor Conditioned)	☐	Performance — NRCC-PRF-LTI-DETAILS (section of the NRCC-PRF-01-E)	
	☑	Prescriptive — NRCC-LTI-01 / 02 / 03 / 04 / 05-E	
	☐	NA	
Covered Process: Commercial Kitchens	☐	Performance — 53 (section of the NRCC-PRF-01-E)	
	☐	Prescriptive — NRCC-PRC-01-E	
	☑	NA:	
Covered Process: Computer Rooms	☐	Performance — 53 (section of the NRCC-PRF-01-E)	
	☐	Prescriptive — NRCC-PRC-02-E	
	☑	NA:	
Covered Process: Laboratory Exhaust	☐	Performance — 54 (section of the NRCC-PRF-01-E)	
	☐	Prescriptive — NRCC-PRC-01-E	
	☑	NA:	

CA Building Energy Efficiency Standards- 2016 Nonresidential Compliance — Report Version: NRCC-PRF-01-E-08082017-4377 — Report Generated at: 2017-10-02 08:21:55

Project Name:	Longfellow Elementary School - Building A	NRCC-PRF-01-E	Page 5 of 18
Project Address:	1101 S DWIGHT AVE, COMPTON 90220	Calculation Date/Time:	08:15, Mon, Oct 02, 2017
Compliance Scope:	Existing/Alteration	Input File Name:	2017-09-11 Longfellow ES BLDG. A - T-24.cbd16e

H. CERTIFICATE OF INSTALLATION, CERTIFICATE OF ACCEPTANCE & CERTIFICATE OF VERIFICATION SUMMARY (NRCI/NRCA/NRCV) –
Documentation Author to indicate which Certificates must be submitted for the features to be recognized for compliance
See Tables G. and H. in MCH and ETI Details Sections for Acceptance Tests and forms by equipment.

Building Component	Compliance Forms (required for submittal)	Confirmed: Plan	Confirmed: Field
Envelope	☑ NRCI-ENV-01-E - For all buildings	☐	☐
	☐ NRCA-ENV-02-E - NFRC label verification for fenestration	☐	☐
	☑ NRCI-MCH-01-E - For all buildings with Mechanical Systems	☐	☐
Mechanical	☐ NRCA-MCH-02-A - Outdoor Air	☐	☐
	☐ NRCA-MCH-03-A – Constant Volume Single Zone HVAC	☐	☐
	☐ NRCA-MCH-04-H - Air Distribution Duct Leakage	☐	☐
	☐ NRCA-MCH-05-A - Air Economizer Controls	☐	☐
	☐ NRCA-MCH-06-A - Demand Control Ventilation	☐	☐
	☐ NRCA-MCH-07-A – Supply Fan Variable Flow Controls	☐	☐
	☐ NRCA-MCH-08-A - Valve Leakage Test	☐	☐
	☐ NRCA-MCH-09-A – Supply Water Temp Reset Controls	☐	☐
	☐ NRCA-MCH-10-A -Hydronic System Variable Flow Controls	☐	☐
	☐ NRCA-MCH-13-A – Auto Demand Shed Controls	☐	☐
	☐ NRCA-MCH-15-A – Packaged Direct Expansion Units	☐	☐
	☐ NRCA-MCH-18-A- Air Handling Units and Zone Terminal Units.	☐	☐
	☐ NRCA-MCH-14-A- Chilled/Hot Water Energy Storage	☐	☐
	☐ NRCA-MCH-16-A – Thermal Energy Storage	☐	☐
	☐ NRCA-MCH-17-A – Supply Air Temp Reset Controls	☐	☐
	☐ NRCA-MCH-19-A – Condensate Water Temp Reset Controls	☐	☐
	☐ NRCA-MCH-18-A – Energy Monsoring/Heat Controls/Systems	☐	☐
	☐ NRCVMCH-04-N- Duct Leakage Test	☐	☐

CA Building Energy Efficiency Standards- 2016 Nonresidential Compliance — Report Version: NRCC-PRF-01-E-08082017-4377 — Report Generated at: 2017-10-02 08:21:55

Project Name:	Longfellow Elementary School - Building A	NRCC-PRF-01-E	Page 6 of 18
Project Address:	1101 S DWIGHT AVE, COMPTON 90220	Calculation Date/Time:	08:15, Mon, Oct 02, 2017
Compliance Scope:	Existing/Alteration	Input File Name:	2017-09-11 Longfellow ES BLDG. A - T-24.cbd16e

H. CERTIFICATE OF INSTALLATION, CERTIFICATE OF ACCEPTANCE & CERTIFICATE OF VERIFICATION SUMMARY (NRCI/NRCA/NRCV) –
Documentation Author to indicate which Certificates must be submitted for the features to be recognized for compliance
See Tables G. and H. in MCH and ETI Details Sections for Acceptance Tests and forms by equipment.

Building Component	Compliance Forms (required for submittal)	Confirmed: Plan	Confirmed: Field
Plumbing	☐ NRCI-PRC-01-E Refrigerated Warehouse	☐	☐
	☐ NRCA-PRC-05-F - Compressed Air Systems	☐	☐
	☐ NRCA-PRC-01-F - Kitchen Exhaust	☐	☐
	☐ NRCA-PRC-03-F –Garage Exhaust.	☐	☐
Covered Process	☐ NRCA-PRC-04-F - Refrigerated Warehouse- Evaporator Fan Motor Controls	☐	☐
	☐ NRCA-PRC-05-F - Refrigerated Warehouse- Evaporative Condenser Controls	☐	☐
	☐ NRCA-PRC-06-F- Refrigerated Warehouse- Air Cooled Condenser Controls	☐	☐
	☐ NRCA-PRC-07F- Refrigerated Warehouse- Variable Speed Compressor	☐	☐
	☐ NRCA-PRC-08-F- Electrical Resistance Underslab Heating System	☐	☐

CA Building Energy Efficiency Standards- 2016 Nonresidential Compliance — Report Version: NRCC-PRF-01-E-08082017-4377 — Report Generated at: 2017-10-02 08:21:55

Project Name:	Longfellow Elementary School - Building A	NRCC-PRF-01-E	Page 7 of 18
Project Address:	1101 S DWIGHT AVE, COMPTON 90220	Calculation Date/Time:	08:15, Mon, Oct 02, 2017
Compliance Scope:	Existing/Alteration	Input File Name:	2017-09-11 Longfellow ES BLDG. A - T-24.cbd16e

I. ENVELOPE GENERAL INFORMATION (See NRCC-PRF-ENV-DETAILS for more information)

					Confirmed: Plan	Confirmed: Field
1.	Total Conditioned Floor Area	1,854 ft²	5.	Number of Floors Above Grade	1	
2.	Total Unconditioned Floor Area	692 ft²	6.	Number of Floors Below Grade	0	
3.	Addition Conditioned Floor Area	0 ft²				
4.	Addition Unconditioned Floor Area	0 ft²				

J. Opaque Surface & Orientation

	8. Total Gross Surface Area	9. Total Fenestration Area	10. Window to Wall Ratio
North Wall:	466 ft²	46 ft²	10.0%
East Wall	808 ft²	132 ft²	16.4%
South Wall	669 ft²	124 ft²	18.6%
West Wall	845 ft²	54 ft²	6.4%
Total:	2,788 ft²	357 ft²	12.8%
Roof	2,214 ft²	0 ft²	00.0%

CA Building Energy Efficiency Standards- 2016 Nonresidential Compliance — Report Version: NRCC-PRF-01-E-08082017-4377 — Report Generated at: 2017-10-02 08:21:55

Project Name:	Longfellow Elementary School - Building A	NRCC-PRF-01-E	Page 8 of 18
Project Address:	1101 S DWIGHT AVE, COMPTON 90220	Calculation Date/Time:	08:15, Mon, Oct 02, 2017
Compliance Scope:	Existing/Alteration	Input File Name:	2017-09-11 Longfellow ES BLDG. A - T-24.cbd16e

I. FENESTRATION ASSEMBLY SUMMARY — § 110.6 — Confirmed

1. Fenestration Assembly Name / Tag or ID.	2. Fenestration Type / Product Type / Frame Type	3. Certification Method*	4. Assembly Method	5. Area ft²	6. Overall U-factor	7. Overall SHGC	8. Vt	9. Shading	Plan	Field
Single Metal Clear	Vertical/Fenestration Exact/Window Metal/Framing	Default Performance	Slidebolt	474	1.19	0.81	0.77	X	☐	☐

* Stock installed manufacturer shall have a certified NFRC Label Certificate or use the CEC default values found in Table 110.6-A and Table 110.6-B. Center of Glass (COG) values are for the glass only, determined by the manufacturers, and not chosen for ease of installation. Use built fenestration values not calculated per Nonresidential Appendix NA6 and not used in this analysis.
** Stock: R= New, A = Altered, E = Existing

Tabing compliance credit for fenestration shading devices? (if "Yes", see NRCC-PRF-ENV-DETAILS for more information) — No

K. OPAQUE SURFACE ASSEMBLY SUMMARY — § 120.7/ § 140.3 — Confirmed

1. Surface Name	2. Surface Type	3. Area (ft²)	4. Framing Type	5. Cavity R-Value	6. Continuous R-Value	7. U-Factor / F-Factor / C-Factor	8. Shading	Plan	Field
R-19 Wall4	ExteriorWall	3756	Wood	13	NA	U-Factor: 0.122	X	☐	☐
R-19 Roof Cathedral10	Roof	2905	Wood	13	NA	U-Factor: 0.067	X	☐	☐
Slab On Grade12	UndergroundFloor	2905	NA	0	NA	F-Factor: 0.730	X	☐	☐
R-13 Wall41	InteriorWall	220	Wood	13	NA	U-Factor: 0.099	X	☐	☐

* Glazing: N= Storefront, A = Curtainwall, E = Entrance

L. ROOFING PRODUCT SUMMARY — § 140.3 — Confirmed

1. Product Type	2. Product Density (lb/ft³)	3. Aged Solar Reflectance	4. Thermal Emittance	5. SRI	6. Cool Roof Credit	7. Roofing Product Description	Plan	Field
R-13 Roof Cathedral10	4.45104	0.08	0.75	NA	No	NA	☐	☐

CA Building Energy Efficiency Standards- 2016 Nonresidential Compliance — Report Version: NRCC-PRF-01-E-08082017-4377 — Report Generated at: 2017-10-02 08:21:55

Project Name:	Longfellow Elementary School - Building A	NRCC-PRF-01-E	Page 9 of 18
Project Address:	1101 S DWIGHT AVE, COMPTON 90220	Calculation Date/Time:	08:15, Mon, Oct 02, 2017
Compliance Scope:	Existing/Alteration	Input File Name:	2017-09-11 Longfellow ES BLDG. A - T-24.cbd16e

M. HVAC SYSTEM SUMMARY (see NRCC-PRF-MCH-DETAILS for more information) — § 110.1 / § 110.2

Any System Equipment * Plan & Economizer* Info Included Below In Table H1 — Confirmed: Plan ☐ Field ☐

1. Equip Name	2. Equip Type	3. System Type (Simple * or Complex *)	4. Qty	5. Total Heating Output (kBtu/h)	6. Supp Heat Source (Y/N)	7. Total Cooling Output (kBtu/h)	8. Efficiency		9. Economizer	10. Acceptance Testing Required? (Y/N) *	11. Fault Detect	
							Cooling	Heating				
Building A.	S2AC (Split)Psheat	Simple	1	74	No	0	57	SEER:14.0 / EER:12.0	AFUE:81.0	Yes	N	☐ ☐

* Any System Equipment including furnaces, air handling units, heat pumps, etc.
** Simple System must complete NRCC-ECN-03-E prior to passing design review form
*** Complex System must complete NRCC-ECM-09-E and corresponding design review form
**** Economizer, of which acceptance tests are required per is provided in NRCC-PRF-MCH-DETAILS

Discrepancy between modeled and designed equipment sizing? (if "Yes", see Table R "Additional Remarks" for an explanation) — No

Mot System Equipment Serves Dues Not Apply

N. ECONOMIZER & FAN SYSTEMS SUMMARY* — § 140.4 — Confirmed

1. Equip Name	2. Supply Fan: Outside Air CFM	2. Supply Fan: CFM	2. Supply Fan: HP	2. Supply Fan: BHP	2. Supply Fan: TSP (Inch WC)	2. Supply Fan: Control	3. Return Fan: CFM	3. Return Fan: HP	3. Return Fan: BHP	3. Return Fan: TSP (Inch WC)	3. Return Fan: Control	4. Economizer Type (if present)	Plan	Field
Building A.	278	2065	0.93	0.878	1.81	ConstantVolume	NA	NA	NA	NA	NA	ItsEconomizer	☐	☐

* Mechanical ventilation calculations and exhaust fans are included in the NRCC-PRF-MCH-DETAILS section

CA Building Energy Efficiency Standards- 2016 Nonresidential Compliance — Report Version: NRCC-PRF-01-E-08082017-4377 — Report Generated at: 2017-10-02 08:21:55

Project Name:	Longfellow Elementary School - Building A	NRCC-PRF-01-E	Page 10 of 18
Project Address:	1101 S DWIGHT AVE, COMPTON 90220	Calculation Date/Time:	08:15, Mon, Oct 02, 2017
Compliance Scope:	Existing/Alteration	Input File Name:	2017-09-11 Longfellow ES BLDG. A - T-24.cbd16e

O. EQUIPMENT CONTROLS — § 120.2 — Confirmed

1. Equip Name	2. Equip Type	3. Controls	Plan	Field
Building A	S2AC	No DCV Controls No Economizer No Supply Air Temp. Control No Optimum Start No Evaporative Cooler	☐	☐

P. SYSTEM DISTRIBUTION SUMMARY — § 120.4/ § 140.4(l)

Dry System Distribution						Confirmed	
1. Equip Name	2. Equip Type	3. Duct Leakage and Sealing Required per 140.4(l)	4. Duct Leakage will be verified per NA5 and NA2	5. Ducts: Insulation R-Value	5. Ducts: Location	Plan	Field
Building A	S2AC	No	No	0	Unconditioned	☐	☐

Does the Project Include Zonal Systems? (if "Yes", see NRCC-PRF-MCH-DETAILS for system information)	No
Does the Project Include a Solar Ready Buildings? (if "Yes", see NRCC-PRF-MCH-DETAILS for system information)	No
Multifamily or Hotel/ Motel Occupancy? (if "Yes", see NRCC-PRF-MCH-DETAILS for DHW system information)	No

Q. INDOOR CONDITIONED LIGHTING GENERAL INFO (see NRCC-PRF-LTI-DETAILS for more info) — § 140.6 — Confirmed

1. Occupancy Type * *	2. Conditioned Floor Area ft² (ft²)	3. Installed Lighting Power (Watts)	4. Lighting Control Credits: (Watts).	5. Additional (Custom) Allowance		Plan	Field
				Area Category Footprints (Watts)	Tailored Method (Watts).		
Building Totals:		0	0	0	0	☐	☐

* See Table 140.6-C
** See ACM 2016 Exp. unconditioned spaces.
*Lighting information for existing spaces modeled is not included in the table
**Multiple entries for an Occupancy Type may be listed in the table as there have been approved for Building Tareas that have the same floor multiplier.

CA Building Energy Efficiency Standards- 2016 Nonresidential Compliance — Report Version: NRCC-PRF-01-E-08082017-4377 — Report Generated at: 2017-10-02 08:21:55

Project Name:	Longfellow Elementary School - Building A	NRCC-PRF-01-E	Page 11 of 18
Project Address:	1101 S DWIGHT AVE, COMPTON 90220	Calculation Date/Time:	08:15, Mon, Oct 02, 2017
Compliance Scope:	Existing/Alteration	Input File Name:	2017-09-11 Longfellow ES BLDG. A - T-24.cbd16e

R. INDOOR CONDITIONED LIGHTING SCHEDULE (Adapted from NRCC-LTI-01-E)* — § 130.0

This Section Does Not Apply

*If lighting power duration were used in the compliance model (lighting dependently) will need to check prescriptive items for controls behavior details.

S1. COVERED PROCESS SUMMARY – ENCLOSED PARKING GARAGES — § 140.9

This Section Does Not Apply

S2. COVERED PROCESS SUMMARY – COMMERCIAL KITCHENS — § 140.9

This Section Does Not Apply

S3. COVERED PROCESS SUMMARY – COMPUTER ROOMS — § 140.9

This Section Does Not Apply

S4. COVERED PROCESS SUMMARY – LABORATORY EXHAUSTS — § 140.9

This Section Does Not Apply

T. UNMET LOAD HOURS

This Section Does Not Apply

U. ENERGY USE SUMMARY

Energy Component	Standard Design Site (kWh/y)	Proposed Design Site (kWh/y)	Margin (kWh/y)	Standard Design Site (kBtu)	Proposed Design Site (kBtu)	Margin (kBtu)
Space Heating	--	--	--	2.1	3.2	-1.1
Space Cooling	3.2	4.2	-0.0	--	--	--
Indoor Fans	12.5	5.3	7.2	--	--	--
Heat Rejection	--	--	--	--	--	--
Pumps & Misc.	--	--	--	--	--	--
Domestic Hot Water	--	--	--	8.6	8.6	0.0
Indoor Lighting	9.1	9.1	0.0	--	--	--
COMPLIANCE TOTAL	**18.9**	**12.6**	**6.2**	**10.7**	**11.8**	**-1.1**
Receptacle	7.9	7.9	0.0	--	--	--

CA Building Energy Efficiency Standards- 2016 Nonresidential Compliance — Report Version: NRCC-PRF-01-E-08082017-4377 — Report Generated at: 2017-10-02 08:21:55

Project Name:	Longfellow Elementary School - Building A	NRCC-PRF-01-E	Page 12 of 18
Project Address:	1101 S DWIGHT AVE, COMPTON 90220	Calculation Date/Time:	08:15, Mon, Oct 02, 2017
Compliance Scope:	Existing/Alteration	Input File Name:	2017-09-11 Longfellow ES BLDG. A - T-24.cbd16e

U. ENERGY USE SUMMARY

Energy Component	Standard Design Site (kWh/y)	Proposed Design Site (kWh/y)	Margin (kWh/y)	Standard Design Site (kBtu)	Proposed Design Site (kBtu)	Margin (kBtu)
Process	--	--	--	--	--	--
Other Ltg.	--	--	--	--	--	--
TOTAL	**36.7**	**29.5**	**6.2**	**10.7**	**11.8**	**-1.1**

CA Building Energy Efficiency Standards- 2016 Nonresidential Compliance — Report Version: NRCC-PRF-01-E-08082017-4377 — Report Generated at: 2017-10-02 08:21:55

Project Name:	Longfellow Elementary School - Building A	NRCC-PRF-01-E	Page 13 of 18
Project Address:	1101 S DWIGHT AVE, COMPTON 90220	Calculation Date/Time:	08:15, Mon, Oct 02, 2017
Compliance Scope:	Existing/Alteration	Input File Name:	2017-09-11 Longfellow ES BLDG. A - T-24.cbd16e

DOCUMENTATION AUTHOR'S DECLARATION STATEMENT — § 10-103

I certify that this Certificate of Compliance documentation is accurate and complete.

Documentation Author Name: Jinkal Patel	
Company: Optimum Energy Design	Signature:
Address: 5200 East La Palma Avenue	Signature Date: 10/02/2017
City/State/Zip: Anaheim California 92807	CEA Identification (if applicable):
Phone: (714)939-2277	

RESPONSIBLE PERSON'S DECLARATION STATEMENT

I certify via following under penalty of perjury, under the laws of the State of California:

1	I hereby affirm that I am eligible under the provisions of Division 3 of the Business and Professions Code to sign this document as the person responsible for its preparation; and that I am licensed in the State of California as a civil engineer, mechanical engineer, electrical engineer, or I am a licensed architect.
2	I affirm that I am eligible under the provisions of Division 3 of the Business and Professions Code by section 5537.2 or 6737.3 to sign this document as the person responsible for its preparation; and that I am a licensed contractor performing this work.
3	I affirm that I am eligible under Division 3 of the Business and Professions Code to sign this document because it pertains to a structure or type of work described as exempt pursuant to Business and Professions Code Section 5537, 5538 and 6737.1.

Responsible Envelope Designer Name:	Signature:
Company: Optimum Energy Design	Date Signed:
Address: 5200 East La Palma Avenue	Declaration Statement Type:
City/State/Zip: Anaheim California 92807	Title: License #:
Phone: (714) 939-2277	
Responsible Lighting Designer Name:	Signature: NOT IN SCOPE
Company:	Date Signed:
Address:	Declaration Statement Type:
City/State/Zip:	Title: License #:
Phone:	
Responsible Mechanical Designer Name: Abby Banerjee	Signature:
Company: Optimum Energy Design	Date Signed: 10/02/2017
Address: 5200 East La Palma Avenue	Declaration Statement Type:
City/State/Zip: Anaheim California 92807	Title: License #: M29253
Phone: (714) 693-2277	

CA Building Energy Efficiency Standards- 2016 Nonresidential Compliance — Report Version: NRCC-PRF-01-E-08082017-4377 — Report Generated at: 2017-10-02 08:21:55

Project Name:	Longfellow Elementary School - Building A	NRCC-PRF-01-E	Page 14 of 18
Project Address:	1101 S DWIGHT AVE, COMPTON 90220	Calculation Date/Time:	08:15, Mon, Oct 02, 2017
Compliance Scope:	Existing/Alteration	Input File Name:	2017-09-11 Longfellow ES BLDG. A - T-24.cbd16e

NRCC-PRF-ENV-DETAILS -SECTION START-

A. OPAQUE SURFACE ASSEMBLY DETAILS — Confirmed: Plan ☐ Field ☐

1. Surface Name	2. Surface Type	3. Description of Assembly Layers	4. Notes
R-13 Wall4	ExteriorWall	Stucco - 7/8 in. Vapor permeable felt - 1 ft in. Wood framed wall, 16in. OC, 3.5in., R-13 Gypsum Board - 1/2 in.	☐ ☐
R-19 Roof Cathedral10	Roof	Asphalt Shingles - 1/4 in Vapor permeable felt - 1/8 in. Plywood - 3/4 in. Air – Cavity – Wall Roof Ceiling - 4 in. or more Wood framed roof, 16in. OC, 5.5in., R-19 Gypsum Board - 1/2 in.	☐ ☐
Slab On Grade12	UndergroundFloor	Slab Type = Unheated/Slab/Grade Insulation Orientation = None Insulation R-Value = 00	☐ ☐
R-13 Wall41	InteriorWall	Stucco - 7/8 in. Vapor permeable felt - 1/8 in. Wood framed wall, 16in. OC, 3.5in., R-13 Gypsum Board - 1/2 in.	☐ ☐

B. OVERHANG DETAILS (Adapted from NRCC-ENV-02-E)

This Section Does Not Apply

C. OPAQUE DOOR SUMMARY

This Section Does Not Apply

CA Building Energy Efficiency Standards- 2016 Nonresidential Compliance — Report Version: NRCC-PRF-01-E-08082017-4377 — Report Generated at: 2017-10-02 08:21:55

Project Name:	Longfellow Elementary School - Building A	NRCC-PRF-01-E	Page 15 of 18
Project Address:	1101 S DWIGHT AVE, COMPTON 90220	Calculation Date/Time:	08:15, Mon, Oct 02, 2017
Compliance Scope:	Existing/Alteration	Input File Name:	2017-09-11 Longfellow ES BLDG. A - T-24.cbd16e

NRCC-PRF-MCH-DETAILS -SECTION START-

A. MECHANICAL VENTILATION AND REHEAT (Adapted from 2016-NRCC-MCH-03-E) — Confirmed: Plan ☐ Field ☐

1. CONDITIONED ZONE NAME	2. VENTILATION ID	3. VENTILATION (cfm)	4. HEATING SYSTEM ID	5. COOLING SYSTEM ID	6. HEATING SYSTEM TYPE	7. HEATING SYSTEM FUEL	8. COOLING SYSTEM TYPE	9. HEATING SYSTEM CAPACITY (kBtu/h)	10. COOLING SYSTEM CAPACITY (kBtu/h)	11. MINIMUM SUPPLY AIR TEMPERATURE (°F)	12. SUPPLY AIR TEMPERATURE RESET	13. MAXIMUM SUPPLY AIR FLOW RATE (cfm)	14. MINIMUM SUPPLY AIR FLOW RATE (cfm)	15. HEATING SYSTEM CONTROL TYPE	16. COOLING SYSTEM CONTROL TYPE	17. MINIMUM EFFICIENCY (HSPF)	18. MINIMUM EFFICIENCY (SEER)	19. ECONOMIZER (Y/N)	20. ECONOMIZER HIGH LIMIT SHUTOFF	Plan	Field
1-Offices	Building A	2,045	NA	NA	NA	NA	NA	N	Building A	1,854	NA	9	10.0	278	278	NA	N	NA	☐	☐
									TOTAL	2,548		NA		NA	NA	NA			☐	☐

B. ZONAL SYSTEM AND TERMINAL UNIT SUMMARY — § 140.4 — Confirmed

1. System ID	2. System Type	3. Qty	4. Rated Capacity (kBtuh) Heating	4. Rated Capacity (kBtuh) Cooling	5. Economizer	6. Zone Name	7. Airflow (cfm) Design	7. Airflow (cfm) Min.	7. Airflow (cfm) Min. Ratio	8. Fan BHP	8. Fan Cycles	8. Fan ECM Motor	Plan	Field
1-Offices-Trm	Uncontrolled	1	NA	NA	NA	1-Offices	2045	NA	NA	NA	NA	☐	☐	☐

C. EXHAUST FAN SUMMARY

This Section Does Not Apply

D. DHW EQUIPMENT SUMMARY – (Adapted from NRCC-PLB-01)

This Section Does Not Apply

E. MULTI-FAMILY CENTRAL DHW SYSTEM DETAILS

This Section Does Not Apply

CA Building Energy Efficiency Standards- 2016 Nonresidential Compliance — Report Version: NRCC-PRF-01-E-08082017-4377 — Report Generated at: 2017-10-02 08:21:55

Project Name:	Longfellow Elementary School - Building A	NRCC-PRF-01-E	Page 16 of 18
Project Address:	1101 S DWIGHT AVE, COMPTON 90220	Calculation Date/Time:	08:15, Mon, Oct 02, 2017
Compliance Scope:	Existing/Alteration	Input File Name:	2017-09-11 Longfellow ES BLDG. A - T-24.cbd16e

F. SOLAR HOT WATER HEATING SUMMARY (Adapted from NRCC-STH-01)

This Section Does Not Apply

G. MECHANICAL HVAC ACCEPTANCE TESTS & FORMS (Adapted from 2016-NRCC-MCH-01-E) — § RA4

Declaration of Required Acceptance Certificates (NRCA) – Acceptance Certificates that may be submitted. Retain copies and verify forms are completed and signed to post in field for field inspector to verify.

Test Description	MCH-03A	MCH-04A	MCH-05A	MCH-06A	MCH-07A	MCH-08A	MCH-09A	MCH-10A	MCH-11A	MCH-12A	MCH-13A	MCH-14A	MCH-15A	MCH-16A	MCH-17A	MCH-18A	MCH-19A	Confirmed: Plan	Confirmed: Field
Equipment Requiring Testing or Verification	# of Units	Constant Volume Single Zone HVAC	Duct Leakage	Air Side Test	Economizer Controls	DCV	Supply Fan VFD	Valve Leakage	Supply Water Temp Reset Controls	Hydronic System Variable Flow Controls	Auto Demand Shed Controls	PDX or DX Units	Air Cooled Condenser Fans	Evaporative Condenser Controls	Variable Speed Compressor Controls	TES Systems	Thermal Energy Storage		
NonBoxBrnr SrtWSystems	1	--	--	--	--	--	--	--	--	--	--	--	--	--	--	--	--	☐	☐
Building A	1	X	X	--	--	--	--	--	--	--	--	--	--	--	--	--	--	☐	☐

H. EVAPORATIVE COOLER SUMMARY

This Section Does Not Apply

NRCC-PRF-LTI-DETAILS -SECTION START-

A. INDOOR CONDITIONED LIGHTING CONTROL CREDITS (Adapted from NRCC-LTI-02-E) — § 140.6

This Section Does Not

Project Name:	Longfellow Elementary School - Building C	NRCC-PRF-01-E	Page 1 of 19
Project Address:	1101 S DWIGHT AVE. COMPTON 90220	Calculation Date/Time:	11:41, Fri, Sep 29, 2017
Compliance Scope:	Existing/Alteration	Input File Name:	2017-09-28 Longfellow ES BLDG. C - T-24.cbd16x

A. PROJECT GENERAL INFORMATION

1.	Project Location (City)	COMPTON	8.	Standards Version	Compliance2016
2.	CK-Zip Code	90220	9.	Compliance Software (version)	EnergyPro 7.1
3.	Climate Zone	9	10.	Weather File	HYBRIDTMYNSC-NORTHROP-HLD_722956_CZ2010.epw
4.	Total Conditioned Floor Area In Scope:	5,484 ft²	11.	Building Orientation (deg)	(N) 0 deg
5.	Total Unconditioned Floor Area:	486 ft²	12.	Permitted Scope of Work:	Existing/Alteration:
6.	Total # of Stories (Habitable Above Grade)	1	13	Building Type(s)	Nonresidential
7.	Total # of dwelling units	0	14.	Zon Type	Relocatable

B. COMPLIANCE RESULTS FOR PERFORMANCE COMPONENTS (Annual TDV Energy Use, kBtu/ft²-yr) — § 140.1

BUILDING COMPLIES

1. Energy Component	2. Standard Design (TDV)	3. Proposed Design (TDV)	4. Compliance Margin (TDV)	5. Percent Better than Standard
Space Heating:	3.41	3.07	+0.34	+134.7%
Space Cooling:	79.20	72.09	7.10	9.0%
Indoor Fans	97.16	43.26	53.92	53.6%
Heat Rejection	--	--	--	--
Pumps & Misc.:	--	--	--	--
Domestic Hot Water:	10.44	10.44	--	0.0%
Indoor Lighting:	59.00	59.00	--	0.0%
COMPLIANCE TOTAL:	250.31	195.59	54.82	21.9%
Receptacle:	65.70	65.70	0.0	0.0%
Process	--	--	--	--
Other Ltg:	--	--	--	--
TOTAL	316.01	261.29	54.8	17.3%

CA Building Energy Efficiency Standards- 2016 Nonresidential Compliance — Report Version: NRCC-PRF-01-E-08082017-4377 — Report Generated at: 2017-09-29 11:47:06

Project Name:	Longfellow Elementary School - Building C	NRCC-PRF-01-E	Page 2 of 19
Project Address:	1101 S DWIGHT AVE. COMPTON 90220	Calculation Date/Time:	11:41, Fri, Sep 29, 2017
Compliance Scope:	Existing/Alteration	Input File Name:	2017-09-28 Longfellow ES BLDG. C - T-24.cbd16x

C. PRIORITY FLAN CHECK/ INSPECTION ITEMS (In order of highest to lowest TDV energy savings)

1st	Indoor Fans: Check envelope and mechanical
2nd	Space Cooling: Check envelope and mechanical
3rd	Heat Rejection: Check envelope and mechanical
4th	Pumps & Misc.: Check mechanical
5th	Domestic Hot Water: Check mechanical
6th	Indoor Lighting: Check lighting
7th	Space Heating: Check envelope and mechanical

Compliance Margin by Energy Component (from Table B of Column A)

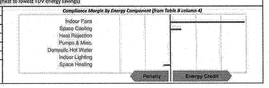

D. EXCEPTIONAL CONDITIONS

The building does not include service water heating. Verify that service water heating is not required and is not included in the design.

E. HERS VERIFICATION

This Section Does Not Apply

F. ADDITIONAL REMARKS

None Provided

CA Building Energy Efficiency Standards- 2016 Nonresidential Compliance — Report Version: NRCC-PRF-01-E-08082017-4377 — Report Generated at: 2017-09-29 11:47:06

Project Name:	Longfellow Elementary School - Building C	NRCC-PRF-01-E	Page 3 of 19
Project Address:	1101 S DWIGHT AVE. COMPTON 90220	Calculation Date/Time:	11:41, Fri, Sep 29, 2017
Compliance Scope:	Existing/Alteration	Input File Name:	2017-09-28 Longfellow ES BLDG. C - T-24.cbd16x

G. COMPLIANCE PATH & CERTIFICATE OF COMPLIANCE SUMMARY

Identify which building components use the performance or prescriptive path for compliance. "NA" is not in project.
For components that utilize the performance path, indicate the short number that includes mandatory measures on plans.

Building Component	Compliance Path	Compliance Forms (required for submittal)	Location of Mandatory Notes on Plans
Envelope	☐ Performance	NRCC-PRF-ENV-DETAILS (section of the NRCC-PRF-01-E)	
	☐ Prescriptive	NRCC-ENV-01 / 02 / 03 / 04 / 05 / 06-E	
	☒ NA		
Mechanical	☒ Performance	NRCC-PRF-MCH-DETAILS (section of the NRCC-PRF-01-E)	
	☐ Prescriptive	NRCC-MCH-01 / 02 / 03 / 04 / 05 / 06 / 07-E	
	☐ NA		
Domestic Hot Water	☐ Performance	NRCC-PRF-PLB-DETAILS (section of the NRCC-PRF-01-E)	
	☐ Prescriptive	NRCC-PLB-01-E	
	☒ NA		
Lighting (Indoor Conditioned)	☐ Performance	NRCC-PRF-LTI-DETAILS (section of the NRCC-PRF-01-E)	
	☐ Prescriptive	NRCC-LTI-01 / 02 / 03 / 04 / 05 / 06-E	
	☒ NA		
Covered Process: Commercial Kitchens	☐ Performance	13 (section of the NRCC-PRF-01-E)	
	☐ Prescriptive	NRCC-PRC-01 / 02-E	
	☒ NA		
Covered Process: Computer Rooms	☐ Performance	13 (section of the NRCC-PRF-01-E)	
	☐ Prescriptive	NRCC-PRC-01-E	
	☒ NA		
Covered Process: Laboratory Exhaust	☐ Performance	14 (section of the NRCC-PRF-01-E)	
	☐ Prescriptive	NRCC-PRC-02 / 03-E	
	☒ NA		

CA Building Energy Efficiency Standards- 2016 Nonresidential Compliance — Report Version: NRCC-PRF-01-E-08082017-4377 — Report Generated at: 2017-09-29 11:47:06

Project Name:	Longfellow Elementary School - Building C	NRCC-PRF-01-E	Page 4 of 19
Project Address:	1101 S DWIGHT AVE. COMPTON 90220	Calculation Date/Time:	11:41, Fri, Sep 29, 2017
Compliance Scope:	Existing/Alteration	Input File Name:	2017-09-28 Longfellow ES BLDG. C - T-24.cbd16x

G. COMPLIANCE PATH & CERTIFICATE OF COMPLIANCE SUMMARY

The following building components are only eligible for prescriptive compliance. Indicate which are relevant to the project. — *The following building components may have mandatory requirements per Para 6, indicate which are relevant to the project.*

Yes	NA	Prescriptive Requirement	Compliance Forms	Yes	NA	Mandatory Requirement	Compliance Forms
☒	☐	Lighting (Indoor Unconditioned) §146.0	NRCC-LTI-01 / 02 / 03 / 04 / 05-E	☐	☒	Commissioning: §110.8: Simple Systems: Complex Systems:	NRCC-CXR-01 / 02 / 03 / 05-E NRCC-CXR-01 / 02 / 04 / 05-E
☐	☒	Lighting (Outdoor) §146.0	NRCC-LTO-01 / 02 / 03-E	☐	☒	Electrical: §130.5	NRCC-ELC-01-E
☐	☒	Lighting (Sign) §146.0	NRCC-LTI-05-E	☐	☒	Solar Ready: §110.10	NRCC-SRA-01 / 02-E
☐	☒	Solar Thermal Water Heating: §146.5.	NRCC-LTI-01-E	☐	☒	Covered Process: §120.6 Parking Garage:	NRCC-PRC-01-E NRCC-PRC-02/03-E
				☐	☒	Commercial Refrigeration:	NRCC-PRC-04-E
				☐	☒	Warehouse Refrigeration	NRCC-PRC-05/07/08-E
				☐	☒	Compressed Air	NRCC-PRC-06-E
				☐	☒	Process Boilers:	NRCC-PRC-12-E

CA Building Energy Efficiency Standards- 2016 Nonresidential Compliance — Report Version: NRCC-PRF-01-E-08082017-4377 — Report Generated at: 2017-09-29 11:47:06

Project Name:	Longfellow Elementary School - Building C	NRCC-PRF-01-E	Page 5 of 19
Project Address:	1101 S DWIGHT AVE. COMPTON 90220	Calculation Date/Time:	11:41, Fri, Sep 29, 2017
Compliance Scope:	Existing/Alteration	Input File Name:	2017-09-28 Longfellow ES BLDG. C - T-24.cbd16x

H. CERTIFICATE OF INSTALLATION, CERTIFICATE OF ACCEPTANCE & CERTIFICATE OF VERIFICATION SUMMARY (NRCI/NRCA/NRCV) –
Documentation Author to indicate which Certificates must be submitted for the features to be recognized for compliance.
(Retain copies and verify forms are completed and signed to post in field for Field Inspector to verify).
See Tables G, and H. in MCH and ETI Details Sections for Acceptance Tests and forms by equipment.

Building Component	Compliance Forms (required for submittal)	Confirmed: Plans	Confirmed: Field
Envelope	☐ NRCI-ENV-01-E - For all buildings	☐	☐
	☐ NRCA-ENV-02-F - NFRC Label certification for fenestration	☐	☐
	☒ NRCA-ENV-03-E - For all buildings with Mechanical Systems	☐	☐
	☒ NRCA-MCH-02-A - Outdoor Air	☐	☐
	☐ NRCA-MCH-03-A – Constant Volume Single Zone HVAC.	☐	☐
	☐ NRCA-MCH-04-H - Air Distribution Duct Leakage	☐	☐
	☒ NRCA-MCH-04-B - Air Economizer Controls	☐	☐
	☐ NRCA-MCH-05-A - Demand Control Ventilation	☐	☐
	☒ NRCA-MCH-07-A – Supply Fan Variable Flow Controls	☐	☐
	☐ NRCA-MCH-08-A: Valve Leakage Test	☐	☐
	☐ NRCA-MCH-09-A – Supply Water Temp Reset Controls	☐	☐
	☐ NRCA-MCH-10-A: Hydronic System Variable Flow Controls	☐	☐
	☒ NRCA-MCH-11-A – Auto Demand Shed Controls	☐	☐
	☒ NRCA-MCH-12-A: Packaged Direct Expansion Units	☐	☐
	☐ NRCA-MCH-13-A: Air Handling Units and Zone Terminal Units	☐	☐
	☐ NRCA-MCH-14-A: Distributed Energy Storage	☐	☐
	☐ NRCA-MCH-15-A – Thermal Energy Storage	☐	☐
	☒ NRCA-MCH-16-A- Supply Air Temp Reset Controls.	☐	☐
	☐ NRCA-MCH-17-A – Condensate Water Temp Reset Controls	☐	☐
	☐ NRCA-MCH-18-A: Energy Management Controls Systems	☐	☐
	☐ NRCV-MCH-04-H: Duct Leakage Test	☐	☐

CA Building Energy Efficiency Standards- 2016 Nonresidential Compliance — Report Version: NRCC-PRF-01-E-08082017-4377 — Report Generated at: 2017-09-29 11:47:06

Project Name:	Longfellow Elementary School - Building C	NRCC-PRF-01-E	Page 6 of 19
Project Address:	1101 S DWIGHT AVE. COMPTON 90220	Calculation Date/Time:	11:41, Fri, Sep 29, 2017
Compliance Scope:	Existing/Alteration	Input File Name:	2017-09-28 Longfellow ES BLDG. C - T-24.cbd16x

H. CERTIFICATE OF INSTALLATION, CERTIFICATE OF ACCEPTANCE & CERTIFICATE OF VERIFICATION SUMMARY (NRCI/NRCA/NRCV) –
Documentation Author to indicate which Certificates must be submitted for the features to be recognized for compliance.
(Retain copies and verify forms are completed and signed to post in field for Field Inspector to verify).
See Tables G, and H. in MCH and ETI Details Sections for Acceptance Tests and forms by equipment.

Building Component	Compliance Forms (required for submittal)	Confirmed: Plans	Confirmed: Field
Plumbing	☐ NRCA-PRC-01-E- Refrigerated Warehouse	☐	☐
	☐ NRCA-PRC-03-F- Compressed Air Systems	☐	☐
	☐ NRCA-PRC-03-A- Kitchen Exhaust	☐	☐
	☐ NRCA-PRC-03-F- Garage Exhaust	☐	☐
	☐ NRCA-PRC-04-F- Refrigerated Warehouse- Evaporator Fan Motor Controls	☐	☐
	☐ NRCA-PRC-05-F- Refrigerated Warehouse- Evaporative Condenser Controls	☐	☐
	☐ NRCA-PRC-07- Refrigerated Warehouse- Air Cooled Condenser Controls	☐	☐
	☐ NRCA-PRC-07F- Refrigerated Warehouse- Variable Speed Compressor	☐	☐
	☐ NRCA-PRC-08-F- Electrical Resistance Underslab Heating System	☐	☐

CA Building Energy Efficiency Standards- 2016 Nonresidential Compliance — Report Version: NRCC-PRF-01-E-08082017-4377 — Report Generated at: 2017-09-29 11:47:06

Project Name:	Longfellow Elementary School - Building C	NRCC-PRF-01-E	Page 7 of 19
Project Address:	1101 S DWIGHT AVE. COMPTON 90220	Calculation Date/Time:	11:41, Fri, Sep 29, 2017
Compliance Scope:	Existing/Alteration	Input File Name:	2017-09-28 Longfellow ES BLDG. C - T-24.cbd16x

I. ENVELOPE GENERAL INFORMATION (See NRCC-PRF-ENV-DETAILS for more information)

					Confirmed: Plans	Confirmed: Field
1.	Total Conditioned Floor Area	5,484 ft²	5.	Number of Floors Above Grade	1	
2.	Total Unconditioned Floor Area	486 ft²	6.	Number of Floors Below Grade	0	
3.	Addition Conditioned Floor Area	0 ft²				
4.	Addition Unconditioned Floor Area	0 ft²				

J. Opaque Surfaces & Orientation

	8. Total Gross Surface Area	9. Total Fenestration Area	10. Window to Wall Ratio	Confirmed: Plans	Confirmed: Field
North Wall:	2,268 ft²	468 ft²	20.6%	☐	☐
East Wall	696 ft²	0 ft²	00.0%	☐	☐
South Wall	2,268 ft²	0 ft²	00.0%	☐	☐
West Wall	0 ft²	0 ft²	00.0%	☐	☐
Total	5,232 ft²	468 ft²	08.9%	☐	☐
Roof	5,484 ft²	0 ft²	00.0%	☐	☐

CA Building Energy Efficiency Standards- 2016 Nonresidential Compliance — Report Version: NRCC-PRF-01-E-08082017-4377 — Report Generated at: 2017-09-29 11:47:06

Project Name:	Longfellow Elementary School - Building C	NRCC-PRF-01-E	Page 8 of 19
Project Address:	1101 S DWIGHT AVE. COMPTON 90220	Calculation Date/Time:	11:41, Fri, Sep 29, 2017
Compliance Scope:	Existing/Alteration	Input File Name:	2017-09-28 Longfellow ES BLDG. C - T-24.cbd16x

J. FENESTRATION ASSEMBLY SUMMARY — § 110.6 — Confirmed: Plans ☐ Field ☐

1. Fenestration Assembly Name / Tag or I.D.	2. Fenestration Type / Frame Type	3. Certification Method¹	4. Assembly Method	5. Area ft²	6. Overall U-factor	7. Overall SHGC	8. Overall VT	9. Shading	Plans	Field
Single Metal Clear	VerticalFenestration FixedWindow MetalFraming	Default Performance	Slidebolt	468	1.19	0.83	0.77	E	☐	☐

¹ Area-weighted fenestration shall have a certified NFRC Label Certificate (IGU and VT) or use the QAI default table found in Table 110.6-A or Table 110.6-B. Energy-Id Glass (EIDG) values are for the glass only, determined by the manufacturer, but are shown for ease of comparison. Low-Solar fenestration values was estimated per Nonresidential Appendix NA6 and are used in the analysis.
² Glazing Fr. - Area, A – Atrium, E – Existing

Taking compliance credit for fenestration shading devices? (If "Yes", see NRCC-PRF-ENV-DETAILS for more information) — No

K. OPAQUE SURFACE ASSEMBLY SUMMARY — § 120.7/ § 140.3 — Confirmed: Plans ☐ Field ☐

1. Surface Name	2. Surface Type	Area (ft²)	3. Framing Type	4. Cavity R-Value	5. Continuous R-Value	6. U-Factor / F-Factor / C-Factor	R, Insulation	Plans	Field
R-13 Wall4	Exterior Wall	4669	Wood	13	NA	U-Factor: 0.114	E	☐	☐
R-13 Roof Cathedral10	Roof	6372	Wood	13	NA	U-Factor: 0.067	E	☐	☐
Slab On Grade12	Underground Floor	6372.	NA	0	NA	F-Factor: 0.730	E	☐	☐

¹ Same as -H - Area, A – Atrium, E – Existing

L. ROOFING PRODUCT SUMMARY — § 140.3 — Confirmed: Plans ☐ Field ☐

1. Product Type	2. Product Density (lb/ft³)	3. Aged Solar Reflectance	4. Thermal Emittance	5. SRI	6. Cool Roof Credit	7. Roofing Product Description	Plans	Field
R-13 Roof Cathedral10	4.35104	0.08	0.75	NA	No	NA	☐	☐

CA Building Energy Efficiency Standards- 2016 Nonresidential Compliance — Report Version: NRCC-PRF-01-E-08082017-4377 — Report Generated at: 2017-09-29 11:47:06

Project Name:	Longfellow Elementary School - Building C	NRCC-PRF-01-E	Page 9 of 19
Project Address:	1101 S DWIGHT AVE. COMPTON 90220	Calculation Date/Time:	11:41, Fri, Sep 29, 2017
Compliance Scope:	Existing/Alteration	Input File Name:	2017-09-28 Longfellow ES BLDG. C - T-24.cbd16x

M. HVAC SYSTEM SUMMARY (see NRCC-PRF-MCH-DETAILS for more information) — § 110.1 / § 110.2 — Confirmed: Plans ☐ Field ☐

Dry System Equipment * (Fan & Economizer info included below in Table N)

1. Equip Name	2. Equip Type	3. System Type (Simple / or Complex ²)	4. Qty	5. Total Heating Output (kBtu/h)	6. Supp Heat Source (Y/N)	7. Total Cooling Output (kBtu/h)	8. Efficiency: Cooling	Efficiency: Heating	10. Acceptance Testing Required? (Y/N) +	11. Zonal Heating	Zonal Cooling
Building C	PUSV (PackagedVVTMini)	Complex	1	142	No	0	242	EER-10.9	AFUE-81.0	Yes	N	☐	☐

¹ Dry System Equipment includes furnaces, air handling units, heat pumps, etc.
² Simple Systems must complete NRCC-MCH-08-E if economizer/energy design criteria forms
³ Complex Systems must complete NRCC-MCH-08-E if economizer/energy design criteria forms
+ Testing is required for all equipment that is not exempt or applicable in previous NRCC-PRF-MCH-DETAILS
* Notes: H - Hydronic, A – Advanced, E – Existing

Mid System Equipment Section Does Not Apply

Discrepancy between modelled and designed equipment sizing? (If "Yes", see Table F "Additional Remarks" for an explanation) — No

N. ECONOMIZER & FAN SYSTEMS SUMMARY¹ — § 140.4 — Confirmed: Plans ☐ Field ☐

1. Equip Name	2. Outside Air	3. Supply Fan					4. Return Fan					5. Economizer Type (if present)	Plans	Field
		CFM	CFM	HP	BHP	TSP (Inch WC)	Control	CFM	HP	BHP	TSP (Inch WC)	Control			
Building C	2057	7500	8,850	0.830	6.09	VariableSpeedDrive		NA	NA	NA	NA	NA	FixedDrybulb	☐	☐

¹ Mechanical ventilation calculations and exhaust fans are factored in the NRCC-PRF-MCH-DETAILS section

CA Building Energy Efficiency Standards- 2016 Nonresidential Compliance — Report Version: NRCC-PRF-01-E-08082017-4377 — Report Generated at: 2017-09-29 11:47:06

Project Name:	Longfellow Elementary School - Building C	NRCC-PRF-01-E	Page 10 of 19
Project Address:	1101 S DWIGHT AVE. COMPTON 90220	Calculation Date/Time:	11:41, Fri, Sep 29, 2017
Compliance Scope:	Existing/Alteration	Input File Name:	2017-09-28 Longfellow ES BLDG. C - T-24.cbd16x

O. EQUIPMENT CONTROLS — § 110.2 — Confirmed: Plans ☐ Field ☐

1. Equip Name	2. Equip Type	3. Controls	Plans	Field
Building C	PUSV	No DCV Controls, DCV Controls Field Drybulb Economizer Warmest Zone Supply Air Temp. Reset Optimum Start No Evaporative Cooler	☐	☐

P. SYSTEM DISTRIBUTION SUMMARY — § 120.4/ § 140.4(j)

		Dry System Distribution				Confirmed	
1. Equip Name	2. Equip Type	3. Duct Leakage and Sealing Required per 140.4(l)	4. Duct Leakage will be verified per NA1 and NA2	5. Ducts: Insulation R-Value	Location	Plans	Field
Building C	PUSV	No	No	0	Unconditioned	☐	☐

Does the Project include Zonal Systems? (If "Yes", see NRCC-PRF-MCH-DETAILS for system information)	No
Does the Project include a Solar Hot Water System? (If "Yes", see NRCC-PRF-MCH-DETAILS for system information)	No
Multifamily or Hotel/ Motel Occupancy? (If "Yes", see NRCC-PRF-MCH-DETAILS for DHW system information)	No

Q. INDOOR CONDITIONED LIGHTING GENERAL INFO (see NRCC-PRF-LTI-DETAILS for more info)² — § 140.6 — Confirmed: Plans ☐ Field ☐

1. Occupancy Type ¹*	2. Conditioned Floor Area ² (ft²)	3. Installed Lighting Power (Watts)	4. Lighting Control Credits: (Watts)	5. Additional (Custom) Allowance: Area Category Footnotes (Watts)	Tailored Method (Watts)	Plans	Field
Building Totals:			0	9	0		

¹ See Table 140.6-C
² Non-HRCI-LTI-01-E for unconditioned spaces.
* Lighting alternation, for lighting subject to multiple control credits it can be stacked or the table
+ Multiple entries for one Occupancy Type may be listed in the table as those have been aggregated for Building Totals but have the same floor multiplier.

CA Building Energy Efficiency Standards- 2016 Nonresidential Compliance — Report Version: NRCC-PRF-01-E-08082017-4377 — Report Generated at: 2017-09-29 11:47:06

Project Name:	Longfellow Elementary School - Building C	NRCC-PRF-01-E	Page 11 of 19
Project Address:	1101 S DWIGHT AVE. COMPTON 90220	Calculation Date/Time:	11:41, Fri, Sep 29, 2017
Compliance Scope:	Existing/Alteration	Input File Name:	2017-09-28 Longfellow ES BLDG. C - T-24.cbd16x

R. INDOOR CONDITIONED LIGHTING SCHEDULE (Adopted from NRCC-LTI-01-E)¹ — § 130.0

This Section Does Not Apply

¹ If lighting power densities were used in the compliance model, Building Departments will need to check/confirm them for Luminaire Schedule details.

S1. COVERED PROCESS SUMMARY – ENCLOSED PARKING GARAGES — § 140.9

This Section Does Not Apply

S2. COVERED PROCESS SUMMARY – COMMERCIAL KITCHENS — § 140.9

This Section Does Not Apply

S3. COVERED PROCESS SUMMARY – COMPUTER ROOMS — § 140.9

This Section Does Not Apply

S4. COVERED PROCESS SUMMARY – LABORATORY EXHAUSTS — § 140.9

This Section Does Not Apply

T. UNMET LOAD HOURS

Thermal Zone Name	Cooling Unmet Load Hour Limit for Thermal Zone	Proposed Cooling Unmet Load Hours	Heating Unmet Load Hour Limit for Thermal Zone	Proposed Heating Unmet Load Hours
1 (VAV 1-C) Classroom 103C	150	0	150	219.25
2 (VAV 2-C) Classroom 105C	150	0	150	219.25
3 (VAV 3-C) Classroom 112C	150	0	150	219.25
4 (VAV 3-C) Classroom 105C	150	0	150	285.25
5 (VAV 5-C) Classroom 113C	150	0	150	219.25
6 (VAV 6-C) Classroom 114C	150	0	150	285.25

U. ENERGY USE SUMMARY

Energy Component	Standard Design Site (kWh)	Proposed Design Site (kWh)	Margin (kWh)	Standard Design Site (MBtu)	Proposed Design Site (MBtu)	Margin (MBtu)
Space Heating:	--	--	--	11.1	27.3	-16.2
Space Cooling:	11.9	8.7	3.2	--	--	--

CA Building Energy Efficiency Standards- 2016 Nonresidential Compliance — Report Version: NRCC-PRF-01-E-08082017-4377 — Report Generated at: 2017-09-29 11:47:06

Project Name:	Longfellow Elementary School - Building C	NRCC-PRF-01-E	Page 12 of 19
Project Address:	1101 S DWIGHT AVE. COMPTON 90220	Calculation Date/Time:	11:41, Fri, Sep 29, 2017
Compliance Scope:	Existing/Alteration	Input File Name:	2017-09-28 Longfellow ES BLDG. C - T-24.cbd16x

U. ENERGY USE SUMMARY

Energy Component	Standard Design Site (kWh)	Proposed Design Site (kWh)	Margin (kWh)	Standard Design Site (MBtu)	Proposed Design Site (MBtu)	Margin (MBtu)
Indoor Fans	21.9	7.4	14.5	--	--	--
Heat Rejection	--	--	--	--	--	--
Pumps & Misc.	--	--	--	--	--	--
Domestic Hot Water	--	--	--	25.0	33.8	0.5
Indoor Lighting	13.5	13.5	0.0	--	--	--
COMPLIANCE TOTAL	47.2	29.6	17.7	55.9	67.1	-16.2
Receptacle	14.5	14.5	0.0	--	--	--
Process	--	--	--	--	--	--
Other Ltg	--	--	--	--	--	--
TOTAL	61.8	44.1	17.7	55.9	67.1	-16.2

CA Building Energy Efficiency Standards- 2016 Nonresidential Compliance — Report Version: NRCC-PRF-01-E-08082017-4377 — Report Generated at: 2017-09-29 11:47:06

Project Name:	Longfellow Elementary School - Building C	NRCC-PRF-01-E	Page 13 of 19
Project Address:	1101 S DWIGHT AVE. COMPTON 90220	Calculation Date/Time:	11:41, Fri, Sep 29, 2017
Compliance Scope:	Existing/Alteration	Input File Name:	2017-09-28 Longfellow ES BLDG. C - T-24.cbd16x

V. ENERGY USE SUMMARY

Energy Component	Standard Design Site (kWh)	Proposed Design Site (kWh)	Margin (kWh)	Standard Design Site (MBtu)	Proposed Design Site (MBtu)	Margin (MBtu)
Indoor Fans	21.9	7.4	14.5	--	--	--
Heat Rejection	--	--	--	--	--	--
Pumps & Misc.	--	--	--	--	--	--
Domestic Hot Water	--	--	--	25.0	33.8	0.5
Indoor Lighting	13.5	13.5	0.0	--	--	--
COMPLIANCE TOTAL	47.2	29.6	17.7	55.9	67.1	-16.2
Receptacle	14.5	14.5	0.0	--	--	--
Process	--	--	--	--	--	--
Other Ltg	--	--	--	--	--	--
TOTAL	61.8	44.1	17.7	55.9	67.1	-16.2

CA Building Energy Efficiency Standards- 2016 Nonresidential Compliance — Report Version: NRCC-PRF-01-E-08082017-4377 — Report Generated at: 2017-09-29 11:47:06

Project Name:	Longfellow Elementary School - Building C	NRCC-PRF-01-E	Page 14 of 19
Project Address:	1101 S DWIGHT AVE. COMPTON 90220	Calculation Date/Time:	11:41, Fri, Sep 29, 2017
Compliance Scope:	Existing/Alteration	Input File Name:	2017-09-28 Longfellow ES BLDG. C - T-24.cbd16x

NRCC-PRF-ENV-DETAILS -SECTION START-

A. OPAQUE SURFACE ASSEMBLY DETAILS — Confirmed: Plans ☐ Field ☐

1. Surface Name	2. Surface Type	3. Description of Assembly Layers	4. Notes	Plans	Field
R-13 Wall4	ExteriorWall	Stucco - 7/8 in. Vapor permeable felt - 3/8 in. Wood framed wall, 16in. OC. 3.5in., R-13 Gypsum Board - 1/2 in.		☐	☐
R-13 Roof Cathedral10	Roof	Asphalt shingles - 1/4 in. Vapor permeable felt - 1/8 in. Plywood - 1/2 in. Air - Cavity - Wall Roof Ceiling - 4 in. or more Wood framed roof, 16in. OC. 3.5in., R-13 Gypsum Board - 1/2 in.		☐	☐
Slab On Grade12	UndergroundFloor	Slab Type = UnheatedSlabOnGrade Insulation Orientation = None Insulation R-Value = 00.		☐	☐

B. OVERHANG DETAILS (Adopted from NRCC-ENV-03-E)

This Section Does Not Apply

C. OPAQUE DOOR SUMMARY — Confirmed: Plans ☐ Field ☐

1. Opaque Door Assembly Name / Tag or I.D.	2. Door Type	3. Certification Method	4. Operation	5. Area	6. Overall U-factor	7. Status¹	Plans	Field
Wood Door7	WoodSkinnerThanOrEqualTo1.75inThickDoor	DefaultPerformance	Swinging	126	0.500	E	☐	☐

¹ Status: N - New, A – Altered, E – Existing

CA Building Energy Efficiency Standards- 2016 Nonresidential Compliance — Report Version: NRCC-PRF-01-E-08082017-4377 — Report Generated at: 2017-09-29 11:47:06

Project Name:	Longfellow Elementary School - Building C	NRCC-PRF-01-E	Page 15 of 19
Project Address:	1101 S DWIGHT AVE. COMPTON 90220	Calculation Date/Time:	11:41, Fri, Sep 29, 2017
Compliance Scope:	Existing/Alteration	Input File Name:	2017-09-28 Longfellow ES BLDG. C - T-24.cbd16x

NRCC-PRF-MCH-DETAILS -SECTION START-

A. MECHANICAL VENTILATION AND REHEAT (Adapted from 2016-NRCC-MCH-03-E) — Confirmed: Plans ☐ Field ☐

1. DESIGN AIR FLOWS — 2. VENTILATION (§ 120.1)

CONDITIONED ZONE NAME	ID	SUPPLY FANS AIR FLOW	RETURN FANS AIR FLOW	OUTDOOR AIR FLOW	MECHANICAL AIR FLOW	MECHANICAL EXHAUST AIR FLOW	EXHAUST FANS AIR FLOW	VENTILATION TYPE	OCCUPANCY TYPE	OCCUPANCY DENSITY	AREA	VENTILATION RATE	DEMAND CONTROL VENTILATION	DESIGN OUTDOOR AIR FLOW	ENERGY RECOVERY	Outside Air Economizer & Integrated Economizer	Plans	Field
1 (VAV 1-C) Classroom 103C	Building C	1,400	350	0.25	NA	NA	Y	Building C	914	NA	23	15.0	343	343	NA	N	NA	☐	☐
2 (VAV 2-C) Classroom 104C	Building C	1,400	350	0.25	NA	NA	Y	Building C	914	NA	23	15.0	343	343	NA	N	NA	☐	☐
3 (VAV 4-C) Classroom 112C	Building C	1,400	350	0.25	NA	NA	Y	Building C	914	NA	23	15.0	343	343	NA	N	NA	☐	☐
4 (VAV 3-C) Classroom 105C	Building C	1,400	350	0.25	NA	NA	Y	Building C	914	NA	23	15.0	343	343	NA	N	NA	☐	☐
5 (VAV 5-C) Classroom 113C	Building C	1,400	350	0.25	NA	NA	Y	Building C	914	NA	23	15.0	343	343	NA	N	NA	☐	☐
6 (VAV 6-C) Classroom 114C	Building C	1,400	350	0.25	NA	NA	Y	Building C	914	NA	23	15.0	343	343	NA	N	NA	☐	☐
								TOTAL	6,373		NA	NA	NA				☐	☐

CA Building Energy Efficiency Standards- 2016 Nonresidential Compliance — Report Version: NRCC-PRF-01-E-08082017-4377 — Report Generated at: 2017-09-29 11:47:06

| | | | |
|---|---|---

Project Name:	Longfellow Elementary School - Building D	NRCC-PRF-01-E	Page 3 of 19
Project Address:	1101 S DWIGHT AVE, COMPTON 90220	Calculation Date/Time:	09.07, Fri, Sep 29, 2017
Compliance Scope:	Existing/Alteration	Input File Name:	2017-09-28 Longfellow ES BLDG. D - T-24.cbd16x

C. PRIORITY PLAN CHECK/ INSPECTION ITEMS (In order of highest to lowest TDV energy savings)

1st	Indoor Fans: Check envelope and mechanical
2nd	Space Cooling: Check envelope and mechanical
3rd	Heat Rejection: Check envelope and mechanical
4th	Pumps & Misc.: Check mechanical
5th	Domestic Hot Water: Check mechanical
6th	Indoor Lighting: Check lighting
7th	Space Heating: Check envelope and mechanical

Compliance Margin By Energy Component (from Table 8 column A)

D. EXCEPTIONAL CONDITIONS

This building does not include service water heating. Verify that service water heating is not required and is not indicated in the design.

E. HERS VERIFICATION

This Section Does Not Apply.

F. ADDITIONAL REMARKS

None Provided.

Project Name:	Longfellow Elementary School - Building D	NRCC-PRF-01-E	Page 4 of 19
Project Address:	1101 S DWIGHT AVE, COMPTON 90220	Calculation Date/Time:	09.07, Fri, Sep 29, 2017
Compliance Scope:	Existing/Alteration	Input File Name:	2017-09-28 Longfellow ES BLDG. D - T-24.cbd16x

G. COMPLIANCE PATH & CERTIFICATE OF COMPLIANCE SUMMARY

Identify which building components use the performance or prescriptive path for compliance. "N/A" is not in project
For components that utilize the performance path, indicate the sheet number that includes mandatory notes on plans.

Building Component	Compliance Path	Compliance Forms (required for submittal)	Location of Mandatory Notes on Plans
Envelope	☐ Performance	NRCC-PRF-ENV-DETAILS (section of the NRCC-PRF-01-E)	
	☐ Prescriptive	NRCC-ENV-03 / 02 / 03 / 04 / 05 / 06-E	
	☒ NA		
Mechanical	☒ Performance	NRCC-PRF-MCH-DETAILS (section of the NRCC-PRF-01-E)	
	☐ Prescriptive	NRCC-MCH-00 / 01 / 02 / 03 / 04 / 05 / 06 / 07-E	
	☐ NA		
Domestic Hot Water	☐ Performance	NRCC-PRF-PLB-DETAILS (section of the NRCC-PRF-01-E)	
	☐ Prescriptive	NRCC-PLB-01-E	
	☒ NA		
Lighting (Indoor Conditioned)	☐ Performance	NRCC-PRF-LTI-DETAILS (section of the NRCC-PRF-01-E)	
	☐ Prescriptive	NRCC-LTI-02 / 02 / 03 / 04 / 05-E	
	☒ NA		
Covered Process: Commercial Kitchens	☐ Performance	52 (section of the NRCC-PRF-01-E)	
	☐ Prescriptive	NRCC-PRC-02-E	
	☒ NA		
Covered Process: Computer Rooms	☐ Performance	53 (section of the NRCC-PRF-01-E)	
	☐ Prescriptive	NRCC-PRC-02-E	
	☒ NA		
Covered Process: Laboratory Exhaust	☐ Performance	54 (section of the NRCC-PRF-01-E)	
	☐ Prescriptive	NRCC-PRC-02/ 03-E	
	☒ NA		

Project Name:	Longfellow Elementary School - Building D	NRCC-PRF-01-E	Page 5 of 19
Project Address:	1101 S DWIGHT AVE, COMPTON 90220	Calculation Date/Time:	09.07, Fri, Sep 29, 2017
Compliance Scope:	Existing/Alteration	Input File Name:	2017-09-28 Longfellow ES BLDG. D - T-24.cbd16x

H. CERTIFICATE OF INSTALLATION, CERTIFICATE OF ACCEPTANCE & CERTIFICATE OF VERIFICATION SUMMARY (NRCI/NRCA/NRCV) –
Documentation Author to indicate which Certificates must be submitted for the features to be recognized for compliance
(Retain copies and verify forms are completed and signed to post in field for Field Inspector to verify).
See Tables G, and H. in MCH and ETI Details Sections for Acceptance Tests and forms by equipment.

Building Component	Compliance Forms (required for submittal)	Confirmed: Pass	Confirmed: Fail
Envelope	☐ NRCI-ENV-01-E - For all buildings	☐	☐
	☒ NRCA-ENV-02-F - Sealed Envelope Air Penetration	☐	☐
	☒ NRCA-MCH-01-A - Outdoor Air	☐	☐
	☐ NRCA-MCH-03-A - Constant Volume Single Zone HVAC	☐	☐
	☐ NRCA-MCH-04-A - Air Distribution Duct Leakage	☐	☐
	☒ NRCA-MCH-05-A - Air Economizer Controls	☐	☐
	☐ NRCA-MCH-06-A - Demand Control Ventilation	☐	☐
	☒ NRCA-MCH-07-A – Supply Fan Variable Flow Controls	☐	☐
	☐ NRCA-MCH-08-A - Valve Leakage Test	☐	☐
	☐ NRCA-MCH-09-A - Supply Water Temp Reset Controls	☐	☐
	☐ NRCA-MCH-10-A- Hydronic System Variable Flow Controls	☐	☐
	☒ NRCA-MCH-11-A – Auto Demand Shed Controls	☐	☐
	☒ NRCA-MCH-12-A- Packaged (Unit) Expansion Units	☐	☐
	☐ NRCA-MCH-13-A- Air Handling Units and Zone Terminal Units	☐	☐
	☐ NRCA-MCH-14-A- Distributed Energy Storage	☐	☐
	☐ NRCA-MCH-15-A – Thermal Energy Storage	☐	☐
	☒ NRCA-MCH-16-A- Supply Air Temp Reset Controls	☐	☐
	☐ NRCA-MCH-17-A – Condensate Water Temp Reset Controls	☐	☐
	☐ NRCA-MCH-18-A- Energy Management Control Systems	☐	☐
	☐ NRCV-MCH-04-H- Duct Leakage Test	☐	☐

Project Name:	Longfellow Elementary School - Building D	NRCC-PRF-01-E	Page 6 of 19
Project Address:	1101 S DWIGHT AVE, COMPTON 90220	Calculation Date/Time:	09.07, Fri, Sep 29, 2017
Compliance Scope:	Existing/Alteration	Input File Name:	2017-09-28 Longfellow ES BLDG. D - T-24.cbd16x

H. CERTIFICATE OF INSTALLATION, CERTIFICATE OF ACCEPTANCE & CERTIFICATE OF VERIFICATION SUMMARY (NRCI/NRCA/NRCV) –
Documentation Author to indicate which Certificates must be submitted for the features to be recognized for compliance
(Retain copies and verify forms are completed and signed to post in field for Field Inspector to verify).
See Tables G, and H. in MCH and ETI Details Sections for Acceptance Tests and forms by equipment.

Building Component	Compliance Forms (required for submittal)	Confirmed: Pass	Confirmed: Fail
Plumbing	☐ NRCI-PLB-01-E - For all buildings with Plumbing Systems	☐	☐
	☐ NRCI-PLB-02-E - required on control systems in high-rise residential, hotel/motel application.	☐	☐
	☐ NRCI-PLB-03-E - Single dwelling unit systems in high-rise residential, hotel/motel application.	☐	☐
	☐ NRCI-PLB-21-H - HERS verified central systems in high-rise residential, hotel/motel application.	☐	☐
	☐ NRCI-PLB-22-H - HERS verified single dwelling unit systems in high-rise residential, hotel/motel application.	☐	☐
	☐ NRCI-PLB-23-E - HERS verified single dwelling unit systems in high-rise residential, hotel/motel application.	☐	☐
	☐ NRCV-PLB-21-H- HERS verified central systems in high-rise residential, hotel/motel application.	☐	☐
	☐ NRCV-PLB-22-H - HERS verified single dwelling unit systems in high-rise residential, hotel/motel application.	☐	☐
	☐ NRCV-STH-01-E - Any solar water heating.	☐	☐
Indoor Lighting	☐ NRCI-LTI-01-E - For all buildings	☐	☐
	☐ NRCI-LTI-02-E - Lighting control system, or for an Energy Management Control System (EMCS)	☐	☐
	☐ NRCI-LTI-03-E - Line-voltage track lighting integral current limiter, or for a supplementary overcurrent protection panel used to energize only line-voltage track lighting	☐	☐
	☐ NRCI-LTI-04-E - Two interlocked systems serving an auditorium, a convention center, a conference room, or a theater.	☐	☐
	☐ NRCI-LTI-05-E - Lighting Control Credit Power Adjustment Factor (PAF)	☐	☐
	☐ NRCI-LTI-06-E - Additional wattage installed in a video conferencing studio	☐	☐
	☐ NRCA-LTI-02-A - Occupancy sensors and automatic time switch controls.	☐	☐
	☐ NRCA-LTI-03-A - Autoxmtic daylighting controls.	☐	☐
	☐ NRCA-LTI-04-A - Demand responsive lighting controls	☐	☐
	☐ NRCI-LTD-01-E - Outdoor Lighting	☐	☐
Outdoor Lighting	☐ NRCI-LTD-02-E- EMCS Lighting Control System	☐	☐
	☐ NRCA-LTD-02-A - Outdoor Lighting Control	☐	☐
Sign Lighting	☐ NRCI-LTS-01-E – Sign Lighting	☐	☐
Electrical	☐ NRCI-ELC-05-E - Electrical Power Distribution	☐	☐
Photovoltaic	☐ NRCI-LTP-01-E Photovoltaic Systems	☐	☐

Project Name:	Longfellow Elementary School - Building D	NRCC-PRF-01-E	Page 7 of 19
Project Address:	1101 S DWIGHT AVE, COMPTON 90220	Calculation Date/Time:	09.07, Fri, Sep 29, 2017
Compliance Scope:	Existing/Alteration	Input File Name:	2017-09-28 Longfellow ES BLDG. D - T-24.cbd16x

H. CERTIFICATE OF INSTALLATION, CERTIFICATE OF ACCEPTANCE & CERTIFICATE OF VERIFICATION SUMMARY (NRCI/NRCA/NRCV) –
Documentation Author to indicate which Certificates must be submitted for the features to be recognized for compliance.
(Retain copies and verify forms are completed and signed to post in field for Field Inspector to verify).
See Tables G, and H. in MCH and ETI Details Sections for Acceptance Tests and forms by equipment.

Building Component	Compliance Forms (required for submittal)	Confirmed: Pass	Confirmed: Fail
Covered Process.	☐ NRCI-PRC-01-E Refrigerated Warehouse	☐	☐
	☐ NRCA-PRC-01-E- Refrigerated Warehouse- Evaporator Fan Motor Controls	☐	☐
	☐ NRCA-PRC-02-E- Refrigerated Warehouse- Evaporative Condenser Controls	☐	☐
	☐ NRCA-PRC-03-E- Refrigerated Warehouse- Air Cooled Condenser Controls	☐	☐
	☐ NRCA-PRC-04- Refrigerated Warehouse- Variable Speed Compressor	☐	☐
	☐ NRCA-PRC-06-E- Electrical Resistance Underslab Heating System	☐	☐

I. ENVELOPE GENERAL INFORMATION (See NRCC-PRF-ENV-DETAILS for more Information)

						Confirmed: Pass	Confirmed: Fail
1.	Total Conditioned Floor Area	9,869 ft²	5.	Number of Floors Above Grade	1		
2.	Total Unconditioned Floor Area	888 ft²	6.	Number of Floors Below Grade	0		
3.	Addition Conditioned Floor Area	0 ft²					
4.	Addition Unconditioned Floor Area	0 ft²					

J. Opaque Surfaces & Orientation

	S. Total Gross Surface Area	S. Total Fenestration Area	10. Window to Wall Ratio
North Wall:	2,268 ft²	468 ft²	20.6%
East Wall	936 ft²	0 ft²	00.0%
South Wall	2,268 ft²	0 ft²	00.0%
West Wall	0 ft²	0 ft²	00.0%
Total	**5,232 ft²**	**468 ft²**	**08.9%**
Roof	9,869 ft²	0 ft²	00.0%

Project Name:	Longfellow Elementary School - Building D	NRCC-PRF-01-E	Page 8 of 19
Project Address:	1101 S DWIGHT AVE, COMPTON 90220	Calculation Date/Time:	09.07, Fri, Sep 29, 2017
Compliance Scope:	Existing/Alteration	Input File Name:	2017-09-28 Longfellow ES BLDG. D - T-24.cbd16x

I. FENESTRATION ASSEMBLY SUMMARY — § 110.6 — Confirmed: Pass ☐ Fail ☐

1. Fenestration Assembly Name / Tag or I.D.	2. Fenestration Type / Product Type / Frame Type	3. Certification Method[1]	4. Assembly Method	5. Area ft²	6. Overall U-factor	7. Overall SHGC	8. Overall VT	9. Manufactured	Pass	Fail
Single Metal Clear	Vertical/Fenestration Fixed/Window Metal/Framing	Default Performance	Skylight	.46E	1.69	0.81	0.77	F	☐	☐

[1] Among standard fenestration shall have a sculpted NFRC Label (Single or Double) or use the CEC default values found in Table 110.6-A and Table 110.6-B. Entries of Glass (FOG) values are for the glass only, determined by the manufacturers and are shown for ease of evaluation. See each fenestration product per subsequent pair Nonresidential Appendix NA6 and are used in the analysis.

[2] Status In - New, E = Altered, E - Existing

Taking compliance credit for fenestration shading devices? (If "Yes", see NRCC-PRF-ENV-DETAILS for more information) — No

J. OPAQUE SURFACE ASSEMBLY SUMMARY — § 120.7 / § 140.3 — Confirmed: Pass ☐ Fail ☐

1. Surface Name	2. Surface Type	3. Area (ft²)	4. Framing Type	5. Cavity R-Value	6. Continuous R-Value	7. U-Factor / R-Factor / C-Factor	Pass	Fail
R-13 Wall4	Exterior Wall	6669	Wood	13	NA	U-Factor: 0.101	E	☐ ☐
R-13 Roof Cathedral10	Roof	6372	Wood	13	NA	U-Factor: 0.067	E	☐ ☐
Slab On Grade12	Underground Floor	6372	NA	0	NA	F-Factor: 0.730	E	☐ ☐

[1] Status: N - New, E = Altered, E - Existing

L. ROOFING PRODUCT SUMMARY — § 140.3 — Confirmed: Pass ☐ Fail ☐

1. Product Type	2. Product Density (lb/ft³)	3. Aged Solar Reflectance	4. Thermal Emittance	5. SRI	6. Cool Roof Credit	7. Roofing Product Description	Pass	Fail
R-13 Roof Cathedral10	4.65104	0.08	0.75	NA	No	NA	☐	☐

Project Name:	Longfellow Elementary School - Building D	NRCC-PRF-01-E	Page 9 of 19
Project Address:	1101 S DWIGHT AVE, COMPTON 90220	Calculation Date/Time:	09.07, Fri, Sep 29, 2017
Compliance Scope:	Existing/Alteration	Input File Name:	2017-09-28 Longfellow ES BLDG. D - T-24.cbd16x

M. HVAC SYSTEM SUMMARY (see NRCC-PRF-MCH-DETAILS for more information) — § 110.1 / § 110.2 — Confirmed: Pass ☐ Fail ☐

Dry System Equipment *(Pass & Economizer Info) Included Below in Table N)*

1. Equip Name	2. Equip Type	3. System Type (Simple * or Complex *)	4. Qty	5. Total Heating Output (kBtu/h)	6. Supp Heat Source (Y/N)	7. Total Cooling Output (kBtu/h)	8. Efficiency: Cooling	8. Efficiency: Heating	9. Acceptance Testing Required? (Y/N) *	10. Economizer	Pass	Fail
Building D	PVAV (Package)(7)(Heat)	Complex	1	342	No	0	342	EER-10.9	AFUE-81.0	Yes	N	☐	☐

[1] Dry System equipment includes furnaces, air handling units, heat pumps, etc.,
[2] Simple System must complete NRCV-MCH-04-E concerning Airflow rate/fan Power
[3] Complex Systems must complete NRCCMCH-04-E concerning Airflow rate/fan Power
[4] Fan Power Credit (FPC) may be taken for qualifiable fan systems in NRCC-PRF-MCH-DETAILS
[5] Status: N - New, E = Altered, E = Existing

Hot System Equipment Section Does Not Apply

Discrepancy between modeled and designed equipment sizing? (If "Yes", see Table F. "Additional Remarks" for an explanation) — No

N. ECONOMIZER & FAN SYSTEMS SUMMARY[1] — § 140.4 — Confirmed: Pass ☐ Fail ☐

1. Equip Name	2. Outside Air: CFM	3. Supply Fan: CFM	HP	BHP	TSP (Inch WC)	Control	4. Return Fan: CFM	HP	BHP	TSP (Inch WC)	Control	5. Economizer Type (If present)	Pass	Fail
Building D	2057	7500	9.830	9.830	4.98	VariableSpeedDrive	NA	NA	NA	NA	NA	FixedDryBulb	☐	☐

[1] Mechanical ventilation calculations and exhaust fans are included in the NRCC-PRF-MCH-DETAILS section

Project Name:	Longfellow Elementary School - Building D	NRCC-PRF-01-E	Page 10 of 19
Project Address:	1101 S DWIGHT AVE, COMPTON 90220	Calculation Date/Time:	09.07, Fri, Sep 29, 2017
Compliance Scope:	Existing/Alteration	Input File Name:	2017-09-28 Longfellow ES BLDG. D - T-24.cbd16x

O. EQUIPMENT CONTROLS — § 120.3 — Confirmed: Pass ☐ Fail ☐

1. Equip Name	2. Equip Type	3. Controls	Pass	Fail
Building D	PVAV	No DCV Controls, SOC Controls/ Fixed Drybulb Economizer/ Warmest Zone Supply Air Temp. Reset Optimzes Start/ No Evaporative Cooler	☐	☐

P. SYSTEM DISTRIBUTION SUMMARY — § 120.4/ § 140.4(l)

Dry System Distribution

1. Equip Name	2. Equip Type	3. Duct Leakage and Sealing Required per 140.4(l)	4. Ducts Leakage will be verified per NAS and NAA	5. Ducts: Insulation R-Value	Location	Confirmed: Pass	Confirmed: Fail
Building D	PVAV	No	NA	8	Unconditioned	☐	☐

Does the Project Include Zonal Systems? (If "Yes", see NRCC-PRF-MCH-DETAILS for system information)	No
Does the Project Include a Solar Hot Water System? (If "Yes", see NRCC-PRF-MCH-DETAILS for system information)	No
Multifamily or Hotel/ Motel Occupancy? (If "Yes", see NRCC-PRF-MCH-DETAILS for DHW system information)	No

Q. INDOOR CONDITIONED LIGHTING GENERAL INFO (see NRCC-PRF-LTI-DETAILS for more Info)* — § 140.6 — Confirmed: Pass ☐ Fail ☐

1. Occupancy Type [1,2]	2. Conditioned Floor Area ft² (ft²)	3. Installed Lighting Power (Watts)	4. Lighting Control Credits (Watts)	5. Additional (Custom) Allowance: Area Category Footcodes (Watts)	5. Additional (Custom) Allowance: Tailored Method (Watts)	Pass	Fail
Building Totals:				0	0		

[1] See ISMV-2(B-G-C
[2] See NRCC-LTI-02-E for unconditioned spaces
[3] Lighting exploration for zoning spaces (standard) Limit included in the table
[4] Multiple entry for an Occupancy Type may be included as the table or there have been aggregated for Building Stocks: Add more for zones from schedule

Project Name:	Longfellow Elementary School - Building D	NRCC-PRF-01-E	Page 11 of 19
Project Address:	1101 S DWIGHT AVE, COMPTON 90220	Calculation Date/Time:	09.07, Fri, Sep 29, 2017
Compliance Scope:	Existing/Alteration	Input File Name:	2017-09-28 Longfellow ES BLDG. D - T-24.cbd16x

R. INDOOR CONDITIONED LIGHTING SCHEDULE (Adapted from NRCC-LTI-01-E)* — § 130.0

This Section Does Not Apply

*If lighting power densities were used in the compliance model (building type/assembly) all need to be listed as exception forms for Luminaire Schedule details.

S1. COVERED PROCESS SUMMARY – ENCLOSED PARKING GARAGES — § 160.9

This Section Does Not Apply

S2. COVERED PROCESS SUMMARY – COMMERCIAL KITCHENS — § 160.9

This Section Does Not Apply

S3. COVERED PROCESS SUMMARY – COMPUTER ROOMS — § 160.9

This Section Does Not Apply

S4. COVERED PROCESS SUMMARY – LABORATORY EXHAUSTS — § 160.9

This Section Does Not Apply

T. UNMET LOAD HOURS

Thermal Zone Name	Cooling Unmet Load Hour Limit for Thermal Zone	Proposed Cooling Unmet Load Hours	Heating Unmet Load Hour Limit for Thermal Zone	Proposed Heating Unmet Load Hours
1-(VAV 1-D) Classroom 1020	150	0	150	228
2-(VAV 2-D) Classroom 1040	150	0	150	278
3-(VAV 3-D) Classroom 1050	150	0	150	291
4-(VAV 4-D) Classroom 1120	150	0	150	226
5-(VAV 5-D) Classroom 1130	150	0	150	228
6-(VAV 6-D) Classroom 1140	150	0	150	251

U. ENERGY USE SUMMARY

Energy Component	Standard Design Site (kWh/h)	Proposed Design Site (kWh/h)	Margin (kWh/h)	Standard Design Site (MBtu)	Proposed Design Site (MBtu)	Margin (MBtu)
Space Heating:	--	--	--	11.2	27.4	-16.2
Space Cooling:	11.9	8.7	3.2	--	--	--

Project Name:	Longfellow Elementary School - Building D	NRCC-PRF-01-E	Page 12 of 19
Project Address:	1101 S DWIGHT AVE, COMPTON 90220	Calculation Date/Time:	09.07, Fri, Sep 29, 2017
Compliance Scope:	Existing/Alteration	Input File Name:	2017-09-28 Longfellow ES BLDG. D - T-24.cbd16x

U. ENERGY USE SUMMARY

Energy Component	Standard Design Site (kWh/h)	Proposed Design Site (kWh/h)	Margin (kWh/h)	Standard Design Site (MBtu)	Proposed Design Site (MBtu)	Margin (MBtu)
Indoor Fans:	21.9	7.4	14.5	--	--	--
Heat Rejection	--	--	--	--	--	--
Pumps & Misc.	--	--	--	--	--	--
Domestic Hot Water.	--	--	--	39.8	33.8	6.0
Indoor Lighting	13.5	13.5	0.0	--	--	--
COMPLIANCE TOTAL	**47.3**	**29.6**	**17.7**	**51.0**	**67.2**	**-16.2**
Receptacle	14.5	14.5	0.0	--	--	--
Process	--	--	--	--	--	--
Other Ltg	--	--	--	--	--	--
TOTAL	**61.8**	**44.1**	**17.7**	**51.0**	**67.2**	**-16.2**

Project Name:	Longfellow Elementary School - Building D	NRCC-PRF-01-E	Page 13 of 19
Project Address:	1101 S DWIGHT AVE, COMPTON 90220	Calculation Date/Time:	09.07, Fri, Sep 29, 2017
Compliance Scope:	Existing/Alteration	Input File Name:	2017-09-28 Longfellow ES BLDG. D - T-24.cbd16x

DOCUMENTATION AUTHOR'S DECLARATION STATEMENT — § 10-103

I certify that this Certificate of Compliance documentation is accurate and complete.

Documentation Author Name: Jinkal Patel	
Company: Optimum Energy Design	Signature:
Address: 5200 East La Palma Avenue	Signature Date: 09/29/2017
City/State/Zip: Anaheim California 92807	CEA Certifications (if applicable):
Phone: (714)693-2277	

RESPONSIBLE PERSON'S DECLARATION STATEMENT

I certify the following under penalty of perjury, under the laws of the State of California:

1	I hereby affirm that I am eligible under the provisions of Division 3 of the Business and Professions Code to sign this document as the person responsible for its preparation; and that I am licensed in the State of California as a civil engineer; mechanical engineer, electrical engineer, or I am a licensed architect.
2	I affirm that I am eligible under the provisions of Division 3 of the Business and Professions Code by section 5537.2 or 6737.3 to sign this document as the person responsible for its preparation; and that I am a licensed contractor performing this work.
3	I affirm that I am eligible under Division 3 of the Business and Professions Code to sign this document because it pertains to a structure or type of work described as exempt pursuant to Business and Professions Code Sections 5537, 5538 and 6737.1.

Responsible Envelope Designer Name:	Signature: NOT IN SCOPE
Company: Optimum Energy Design	Date Signed:
Address: 5200 East La Palma Avenue	Declaration Statement Type:
City/State/Zip: Anaheim California 92807	Title: License #:
Phone: (714) 693-2277	
Responsible Lighting Designer Name:	Signature: NOT IN SCOPE
Company:	Date Signed:
Address:	Declaration Statement Type:
City/State/Zip:	Title: License #:
Phone:	
Responsible Mechanical Designer Name: Abby Banerjee	Signature:
Company: Optimum Energy Design	Date Signed: 09/29/2017
Address: 5200 East La Palma Avenue	Declaration Statement Type:
City/State/Zip: Anaheim California 92807	Title: License #: M29253
Phone: (714) 693-2277	

Project Name:	Longfellow Elementary School - Building D	NRCC-PRF-01-E	Page 14 of 19
Project Address:	1101 S DWIGHT AVE, COMPTON 90220	Calculation Date/Time:	09.07, Fri, Sep 29, 2017
Compliance Scope:	Existing/Alteration	Input File Name:	2017-09-28 Longfellow ES BLDG. D - T-24.cbd16x

NRCC-PRF-ENV-DETAILS -SECTION START-

A. OPAQUE SURFACE ASSEMBLY DETAILS — Confirmed: Pass ☐ Fail ☐

1. Surface Name	2. Surface Type	3. Description of Assembly Layers	4. Notes	Pass	Fail
R-13 Wall4	ExteriorWall	Stucco - 7/8 in. Vapor permeable felt - 1/8 in. Wood framed wall, Stick, OC, 2.5in., R-13 Gypsum Board - 1/2 in.		☐	☐
R-13 Roof Cathedral10	Roof	Asphalt shingles - 1/4 in. Vapor permeable felt - 1/8 in. Plywood - 1/2 in. Air - Cavity - Wall Roof Ceiling - 4 in. or more Wood framed roof, Attic, OC, 5.5in., R-13 Gypsum Board - 1/2 in.		☐	☐
Slab On Grade12	UndergroundFloor	Slab Type = UnInsulatedSlabOnGrade Insulation Orientation = None Insulation R-Value = R0		☐	☐

B. OVERHANG DETAILS (Adapted from NRCC-ENV-02-E)

This Section Does Not Apply

C. OPAQUE DOOR SUMMARY — Confirmed: Pass ☐ Fail ☐

1. Opaque Door Assembly Name / Tag or I.D.	2. Door Type	3. Certification Method	4. Operation	5. Area	6. Overall U-factor.	7. Status[1]	Pass	Fail
Wood Door7	WoodGreaterThanOrEqual1in1.75inThickDoor	Default Performance	Swinging	329.	0.500	E	☐	☐

[1] Status: N - New, E = Altered, E = Existing

Project Name:	Longfellow Elementary School - Building D	NRCC-PRF-01-E	Page 15 of 19
Project Address:	1101 S DWIGHT AVE, COMPTON 90220	Calculation Date/Time:	09.07, Fri, Sep 29, 2017
Compliance Scope:	Existing/Alteration	Input File Name:	2017-09-28 Longfellow ES BLDG. D - T-24.cbd16x

NRCC-PRF-MCH-DETAILS -SECTION START-

A. MECHANICAL VENTILATION AND REHEAT *(Adapted from 2016-NRCC-MCH-03-E)* — Confirmed: Pass ☐ Fail ☐

1. CONDITIONED ZONE NAME	ID	1. DEMAND CONTROL VENTILATION SYSTEM	1. ENERGY RECOVERY SYSTEM	1. ZONE AIR DISTRIBUTION EFFECTIVENESS	1. ZONE SECONDARY AIRFLOW SYSTEM	1. ZONE MINIMUM DISTRIBUTION AIRFLOW SYSTEM	1. ZONE DESIGN HEATING SYSTEM	2. VENTILATION (§ 120.1): VENTILATION ID	2. VENTILATION (§ 120.1): OCCUPANCY TYPES	2. VENTILATION (§ 120.1): AREA TYPES	2. VENTILATION (§ 120.1): DESIGN OCCUPANCY	2. VENTILATION (§ 120.1): AREA PER PERSON	2. VENTILATION (§ 120.1): TIME OF DAY	2. VENTILATION (§ 120.1): TIME OF WEEK	2. VENTILATION (§ 120.1): Ventilation Rate Procedure § 6.5	Pass	Fail
1-(VAV 1-D) Classroom 1020	Building D	1,400	350	0.25	NA	NA	Y	Building D	916	NA	33	15.0	343	343	NA	N	NA	☐	☐
2-(VAV 2-D) Classroom 1040	Building D	1,400	350	0.25	NA	NA	Y	Building D	916	NA	33	15.0	343	343	NA	N	NA	☐	☐
3-(VAV 3-D) Classroom 1050	Building D	1,400	350	0.25	NA	NA	Y	Building D	916	NA	23	15.0	343	343	NA	N	NA	☐	☐
4-(VAV 4-D) Classroom 1120	Building D	1,400	350	0.25	NA	NA	Y	Building D	916	NA	23	15.0	343	343	NA	N	NA	☐	☐
5-(VAV 5-D) Classroom 1130	Building D	1,400	350	0.25	NA	NA	Y	Building D	916	NA	23	15.0	343	343	NA	N	NA	☐	☐
6-(VAV 6-D) Classroom 1140	Building D	1,400	350	0.25	NA	NA	Y	Building D	916	NA	23	15.0	343	343	NA	N	NA	☐	☐
										TOTAL	0,373		NA	NA	NA			☐	☐

Project Name:	Longfellow El

STATE OF CALIFORNIA
MECHANICAL SYSTEMS
CEC-NRCC-MCH-01-E (Revised 01/16) CALIFORNIA ENERGY COMMISSION

CERTIFICATE OF COMPLIANCE	NRCC-MCH-01-E
Mechanical Systems	Page of
Project Name: Longfellow Elementary Schools-Building E	Date Prepared: 10/02/2017

A. MECHANICAL COMPLIANCE DOCUMENTS & WORKSHEETS (check box if worksheet is included)

For detailed instructions on the use of this and all Energy Efficiency Standards compliance forms, refer to the 2016 Nonresidential Manual
Note: The Enforcement Agency may require all forms to be incorporated onto the building plans.

YES	NO	Comp. Doc./Worksheet #	Title
◉	○	NRCC-MCH-01-E (Part 1 of 3)	Certificate of Compliance, Declaration. Required on plans for all submittals.
◉	○	NRCC-MCH-01-E (Part 2 of 3)	Certificate of Compliance, Required Acceptance Tests (MCH-02-A to 11-A). Required on plans for all submittals.
◉	○	NRCC-MCH-01-E (Part 3 of 3)	Certificate of Compliance, Required Acceptance Tests (MCH-12-A to 18-A). Required on plans where applicable.
◉	○	NRCC-MCH-02-E (Part 1 of 2)	Mechanical Dry Equipment Summary is required for all submittals with Central Air Systems. It is optional on plans.
○	◉	NRCC-MCH-02-E (Part 2 of 2)	Mechanical Wet Equipment Summary is required for all submittals with chilled water, hot water or condenser water systems. It is optional on plans.
◉	○	NRCC-MCH-03-E	Mechanical Ventilation and Reheat is required for all submittals with multiple zone heating and cooling systems. It is optional on plans.
○	◉	NRCC-MCH-07-E (Part 1 of 2)	Power Consumption of Fans. Required on plans where applicable
○	◉	NRCC-MCH-07-E (Part 2 of 2)	Power Consumption of Fans, Declaration. Required on plans where applicable

B. MECHANICAL HVAC ACCEPTANCE FORMS (check box for required compliance documents)

Test Performed By:

Designer:
This compliance document is to be used by the designer and attached to the plans. Listed below are all the acceptance tests for HVAC systems. The designer is required to check the applicable boxes for all acceptance tests that apply and list all equipment that requires an acceptance test. All equipment of the same type that requires a test, list the equipment description and the number of systems.

Installing Contractor:
The contractor who installed the equipment is responsible to either conduct the acceptance test themselves or have a qualified entity run the test for them. If more than one person has responsibility for the acceptance testing, each person shall sign and submit the Certificate of Acceptance applicable to the portion of the construction or installation for which they are responsible.

Enforcement Agency:
Plancheck - The NRCC-MCH-01-E compliance document is not considered a completed document and is not to be accepted by the building department unless the correct boxes are checked.

Test Description		MCH-02-A	MCH-03-A	MCH-04-A	MCH-05-A	MCH-06-A	MCH-07-A	MCH-08-A	MCH-09-A	MCH-10-A	MCH-11-A
Equipment Requiring Testing or Verification	# of Units	Outdoor Air	Single Zone Unitary	Air Distribution Ducts	Economizer Controls	Demand Controlled Ventilation (DCV)	Supply Fan VAV	Valve Leakage Test	Supply Water Temp. Reset	Hydronic System Variable Flow Control	Automatic Demand Shed Control
existing 20 Ton	1	☑	☑	☐	☐	☐	☐	☐	☐	☐	☐

Add Row | Remove Last

STATE OF CALIFORNIA
MECHANICAL SYSTEMS
CEC-NRCC-MCH-01-E (Revised 01/16) CALIFORNIA ENERGY COMMISSION

CERTIFICATE OF COMPLIANCE	NRCC-MCH-01-E
Mechanical Systems	Page of
Project Name: Longfellow Elementary Schools-Building E	Date Prepared: 10/02/2017

C. MECHANICAL HVAC ACCEPTANCE FORMS (check box for required compliance documents)

Test Performed By:

Designer:
This compliance document is to be used by the designer and attached to the plans. Listed below are all the acceptance tests for HVAC systems. The designer is required to check the applicable boxes for all acceptance tests that apply and list all equipment that requires an acceptance test. All equipment of the same type that requires a test, list the equipment description and the number of systems.

Installing Contractor:
The contractor who installed the equipment is responsible to either conduct the acceptance test themselves or have a qualified entity run the test for them. If more than one person has responsibility for the acceptance testing, each person shall sign and submit the Certificate of Acceptance applicable to the portion of the construction or installation for which they are responsible.

Enforcement Agency:
Plancheck - The NRCC-MCH-01-E compliance document is not considered a completed document and is not to be accepted by the building department unless the correct boxes are checked.
Inspector - Before occupancy permit is granted all newly installed process systems must be tested to ensure proper operations.

Test Description		MCH-12-A	MCH-13-A	MCH-14-A	MCH-15-A	MCH-16-A	MCH-17-A	MCH-18-A
Equipment Requiring Testing or Verification	# of Units	Fault Detection & Diagnostics for DX Units	Automatic Fault Detection & Diagnostics for Air & Zone	Distributed Energy Storage DX AC Systems	Thermal Energy Storage (TES) Systems	Supply Air Temperature Reset Controls	Condenser Water Reset Controls	ECMS
		☐	☐	☐	☐	☐	☐	☐

Add Row | Remove Last

STATE OF CALIFORNIA
MECHANICAL SYSTEMS
CEC-NRCC-MCH-01-E (Revised 01/16) CALIFORNIA ENERGY COMMISSION

CERTIFICATE OF COMPLIANCE	NRCC-MCH-01-E
Mechanical Systems	Page of
Project Name: Longfellow Elementary Schools-Building E	Date Prepared: 10/02/2017

DOCUMENTATION AUTHOR'S DECLARATION STATEMENT

1. I certify that this Certificate of Compliance documentation is accurate and complete.

Documentation Author Name: Jinkal Patel	Documentation Author Signature:
Company: Optimum Energy Design	Signature Date: 10/02/2017
Address: 5200 East LA Palma Avenue	CEA/ HERS Certification Identification (if applicable):
City/State/Zip: Anaheim, CA 92807	Phone: 714-693-2277

RESPONSIBLE PERSON'S DECLARATION STATEMENT

I certify the following under penalty of perjury, under the laws of the State of California:
1. The information provided on this Certificate of Compliance is true and correct.
2. I am eligible under Division 3 of the Business and Professions Code to accept responsibility for the building design or system design identified on this Certificate of Compliance (responsible designer).
3. The energy features and performance specifications, materials, components, and manufactured devices for the building design or system design identified on this Certificate of Compliance conform to the requirements of Title 24, Part 1 and Part 6 of the California Code of Regulations.
4. The building design features or system design features identified on this Certificate of Compliance are consistent with the information provided on other applicable compliance documents, worksheets, calculations, plans and specifications submitted to the enforcement agency for approval with this building permit application.
5. I will ensure that a completed signed copy of this Certificate of Compliance shall be made available with the building permit(s) issued for the building, and made available to the enforcement agency for all applicable inspections. I understand that a completed signed copy of this Certificate of Compliance is required to be included with the documentation the builder provides to the building owner at occupancy.

Responsible Designer Name: Abby Banerjee	Responsible Designer Signature:
Company: Optimum Energy Design	Date Signed: 10/02/2017
Address: 5200 East LA Palma Avenue	License: m29253
City/State/Zip: Anaheim, CA 92807	Phone: 714-693-2277

STATE OF CALIFORNIA
HVAC DRY & WET SYSTEM REQUIREMENTS
CEC-NRCC-MCH-02-E (Revised 01/16) CALIFORNIA ENERGY COMMISSION

CERTIFICATE OF COMPLIANCE	NRCC-MCH-02-E
HVAC Dry System Requirements	(Page 1 of 3)
Project Name: Longfellow Elementary Schools-Building E	Date Prepared: 10/02/2017

A. Equipment Tags and System Description[1]- Dry Systems		Existing unit		
MANDATORY MEASURES	***T-24 Sections***	***Reference to the Requirements in the Contract Documents[2]***		
Heating Equipment Efficiency[3]	110.1 or 110.2(a)	Existing		
Cooling Equipment Efficiency[3]	110.1 or 110.2(a)	Existing		
HVAC or Heat Pump Thermostats	110.2(b), 110.2(c)	Existing		
Furnace Standby Loss Control	110.2(d)	Existing		
Low Leakage AHUs	110.2(f)	Existing		
Ventilation[4]	120.1(b)	Existing		
Demand Control Ventilation[5]	120.1(c)4	Existing		
Occupant Sensor Ventilation Control[6]	120.1(c)5, 120.2(e)3	Existing		
Shutoff and Reset Controls[7]	120.2(e)	Existing		
Outdoor Air and Exhaust Damper Control	120.2(f)	Existing		
Isolation Zones	120.2(g)	Existing		
Automatic Demand Shed Controls	120.2(h)	Existing		
Economizer FDD	120.2(i)	Existing		
Duct Insulation	120.4	Existing		
PRESCRIPTIVE MEASURES				
Equipment is sized in conformance with 140.4 (a & b)	140.4(a & b)	○ Yes ○ No	○ Yes ○ No	○ Yes ○ No
Supply Fan Pressure Control	140.4(c)	Existing		
Simultaneous Heat/Cool[8]	140.4(d)	Existing		
Economizer	140.4(e)	Existing		
Heat and Cool Air Supply Reset	140.4(f)	Existing		
Electric Resistance Heating[9]	140.4(g)	Existing		
Duct Leakage Sealing and Testing.[10]	140.4(l)	Existing		

Notes:
1. *Provide equipment tags (e.g. AHU 1 to 10) and system description (e.g. Single Duct VAV reheat) as appropriate. Multiple units with common requirements can be grouped together.*
2. *Provide references to plans (i.e. Drawing Sheet Numbers) and/or specifications (including Section name/number and relevant paragraphs) where each requirement is specified. Enter "N/A" if the requirement is not applicable to this system.*
3. *The referenced plans and specifications must include all of the following information: equipment tag, equipment nominal capacity, Title 24 minimum efficiency requirements, and actual rated equipment efficiencies. Where multiple efficiency requirements are applicable (e.g. full- and part-load) include all. Where appliance standards apply (110.1), identify where equipment is required to be listed per Title 20 1601 et seq.*
4. *Identify where the ventilation requirements are documented for each central HVAC system. Include references to both central unit schedules and sequences of operation. If one or more spaces is naturally ventilated identify where this is documented in the plans and specifications. Multiple zone central air systems must also provide a MCH-03-E compliance document.*
5. *If one or more spaces has demand controlled ventilation identify where it is specified including the sensor specifications and the sequence of operation.*
6. *If one or more space has occupant sensor ventilation control identify where it is specified including the sensor specifications and the sequence of operation*
7. *If the system is DDC identify the sequences for the system start/stop, optimal start, setback (if required) and setup (if required). For all systems identify the specification for the thermostats and time clocks (if applicable).*
8. *Identify where the heating, cooling and deadband airflows are scheduled for this system. Include a reference to the specification of the zone controls. Provide a MCH-03-E compliance document.*
9. *Enter N/A if there is no electric heating. If the system has electric heating indicate which exception to 140.4(g) applies.*
10. *If duct leakage sealing and testing is required, a MCH-04-A compliance document must be submitted.*

STATE OF CALIFORNIA
HVAC DRY & WET SYSTEM REQUIREMENTS
CEC-NRCC-MCH-02-E (Revised 01/16) CALIFORNIA ENERGY COMMISSION

CERTIFICATE OF COMPLIANCE	NRCC-MCH-02-E
HVAC Dry & Wet System Requirements	(Page 2 of 3)
Project Name: Longfellow Elementary Schools-Building E	Date Prepared: 10/02/2017

B. Equipment Tags and System Description[1]- Wet Systems				
MANDATORY MEASURES	***T-24 Sections***	***Reference to the Requirements in the Contract Documents[2]***		
Heating Hot Water Equipment Efficiency[3]	110.1			
Cooling Chilled and Condenser Water Equipment Efficiency[3]	110.1, 140.4(i)			
Open and Closed Circuit Cooling Towers conductivity or flow-based controls	110.2(e) 1			
Open and Closed Circuit Cooling Towers Maximum Achievable Cycles of Concentration (LSI)[6]	110.2(e) 2			
Open and Closed Circuit Cooling Towers Flow Meter with analog output	110.2(e) 3			
Open and Closed Circuit Cooling Towers Overflow Alarm	110.2(e) 4		N/A	
Open and Closed Circuit Cooling Towers Efficient Drift Eliminators	110.2(e) 5			
Pipe Insulation	120.3			
PRESCRIPTIVE MEASURES				
Cooling Tower Fan Controls	140.4(h)2, 140.4(h)5	○ Yes ○ No	○ Yes ○ No	○ Yes ○ No
Cooling Tower Flow Controls	140.4(h)3			
Centrifugal Fan Cooling Towers[4]	140.4(h)4			
Air-Cooled Chiller Limitation[5]	140.4(j)			
Variable Flow System Design	140.4(k)			
Chiller and Boiler Isolation	140.4(k)			
CHW and HHW Reset Controls	140.4(k)			
WLHP Isolation Valves	140.4(k)			
VSD on CHW, CW & WLHP Pumps >5HP	140.4(k)			
DP Sensor Location	140.4(k)			

Notes:
1. *Provide equipment tags (e.g. CH 1 to 3) or system description (e.g. CHW loop) as appropriate. Multiple units with common requirements can be grouped together.*
2. *Provide references to plans (i.e. Drawing Sheet Numbers) and/or specifications (including Section name/number and relevant paragraphs) where each requirement is specified. Enter "N/A" if the requirement is not applicable to this system.*
3. *The referenced plans and specifications must include all of the following information: equipment tag, equipment nominal capacity, Title 24 minimum efficiency requirements, and actual rated equipment efficiencies. Where multiple efficiency requirements are applicable (e.g. full- and part-load) include all. For chillers operating at non-standard efficiencies provide the Kadj values. For chillers also note whether the efficiencies are Path A or Path B.*
4. *Identify if cooling towers have propeller fans. If towers use centrifugal fans document which exception is used.*
5. *If air-cooled chillers are used, document which exceptions have been used to comply with 140.4(j) and the total installed design capacity of the air-cooled chillers in the chilled water plant.*
6. *Identify the existence of a completed MCH-06-E when open or closed circuit cooling towers are specified to be installed, otherwise enter "N/A".*

STATE OF CALIFORNIA
HVAC SYSTEM REQUIREMENTS
CEC-NRCC-MCH-02-E (Revised 01/16) CALIFORNIA ENERGY COMMISSION

CERTIFICATE OF COMPLIANCE	NRCC-MCH-02-E
HVAC Wet System Requirements	(Page 3 of 3)
Project Name: Longfellow Elementary Schools-Building E	Date Prepared: 10/02/2017

DOCUMENTATION AUTHOR'S DECLARATION STATEMENT

1. I certify that this Certificate of Compliance documentation is accurate and complete.

Documentation Author Name: Jinkal Patel	Documentation Author Signature:
Company: Optimum Energy Design	Signature Date: 10/02/2017
Address: 5200 East LA Palma Avenue	CEA/ HERS Certification Identification (if applicable):
City/State/Zip: Anaheim, CA 92807	Phone: 714-693-2277

RESPONSIBLE PERSON'S DECLARATION STATEMENT

I certify the following under penalty of perjury, under the laws of the State of California:
1. The information provided on this Certificate of Compliance is true and correct.
2. I am eligible under Division 3 of the Business and Professions Code to accept responsibility for the building design or system design identified on this Certificate of Compliance (responsible designer).
3. The energy features and performance specifications, materials, components, and manufactured devices for the building design or system design identified on this Certificate of Compliance conform to the requirements of Title 24, Part 1 and Part 6 of the California Code of Regulations.
4. The building design features or system design features identified on this Certificate of Compliance are consistent with the information provided on other applicable compliance documents, worksheets, calculations, plans and specifications submitted to the enforcement agency for approval with this building permit application.
5. I will ensure that a completed signed copy of this Certificate of Compliance shall be made available with the building permit(s) issued for the building, and made available to the enforcement agency for all applicable inspections. I understand that a completed signed copy of this Certificate of Compliance is required to be included with the documentation the builder provides to the building owner at occupancy.

Responsible Designer Name: Abby Banerjee	Responsible Designer Signature:
Company: Optimum Energy Design	Date Signed:
Address: 5200 East LA Palma Avenue	License: m29253
City/State/Zip: Anaheim, CA 92807	Phone: 714-693-2277

STATE OF CALIFORNIA
MECHANICAL VENTILATION AND REHEAT
CEC-NRCC-MCH-03-E (Revised 05/16) CALIFORNIA ENERGY COMMISSION

CERTIFICATE OF COMPLIANCE	NRCC-MCH-03-E
Mechanical Ventilation & Reheat	Page of
Project Name: Longfellow Elementary Schools-Building E	Date Prepared: 10/02/2017

A. Mechanical Ventilation and Reheat

In lieu of this compliance document, the required outdoor ventilation rates and airflows may be shown on the plans or the calculations can be presented in a spreadsheet. Mechanical Ventilation and Reheat worksheet available on the Energy Commission's website at: http://www.energy.ca.gov/title24/2016standards/.
Note: In all of the calculations that compare a supply quantity to the REQ'D V.A. quantity, the actual percentage of outdoor air in the supply is ignored.
Areas in buildings for which natural ventilation is used should be clearly designated. Specifications must require that building operating instructions include explanations of the natural ventilation system.

ACTUAL DESIGN (FROM EQUIPMENT SCHEDULES, ETC)						AREA BASIS			OCCUPANCY BASIS			ROOM BASIS	MINIMUM		VAV REHEATED PRIMARY AIR CFM			VAV DEADBAND PRIMARY AIR CFM		
01	02	03	04	05	06	07	08	09	10	11	12	13	14	15	16	17	18	19	20	21
ZONE/SYSTEM/VAV BOX TAG	DESIGN PRIMARY COOLING AIRFLOW (CFM)	DESIGN PRIMARY DEADBAND AIRFLOW (CFM)	DESIGN PRIMARY HEATING AIRFLOW (CFM)	CONTROL TYPE DDC (Y/N)	TRANSFER AIRFLOW (CFM)	CONDITIONED AREA (ft²)	MIN CFM PER AREA	MIN CFM BY AREA	NUMBER OF PEOPLE	CFM PER PERSON	MIN CFM BY OCCUPANT	MIN CFM BY ROOM	REQ'D VENT AIRFLOW (CFM)	COMPLIES?	BASED DESIGN PRIMARY COOLING AIR	MAXIMUM REHEAT (CFM)	COMPLIES?	PRIMARY COOLING AIR	AIRFLOW	COMPLIES?
ZD-1	1600	400	1600	Yes		914	0.38	343	22.9	15	343		343	PAS						
ZD-2	1600	400	1600	Yes		914	0.38	343	22.9	15	343		343	PAS						
ZD-3	1600	400	1600	Yes		914	0.38	343	22.9	15	343		343	PAS						
ZD-4	1600	400	1600	Yes		914	0.38	343	22.9	15	343		343	PAS						
ZD-5	1600	400	1600	Yes		914	0.38	343	22.9	15	343		343	PAS						

Add Row | Remove Last

STATE OF CALIFORNIA
MECHANICAL VENTILATION AND REHEAT
CEC-NRCC-MCH-03-E (Revised 05/16) CALIFORNIA ENERGY COMMISSION

CERTIFICATE OF COMPLIANCE	NRCC-MCH-03-E
Mechanical Ventilation & Reheat	Page of
Project Name: Longfellow Elementary Schools-Building E	Date Prepared: 10/02/2017

DOCUMENTATION AUTHOR'S DECLARATION STATEMENT

1. I certify that this Certificate of Compliance documentation is accurate and complete.

Documentation Author Name: Jinkal Patel	Documentation Author Signature:
Company: Optimum Energy Design	Signature Date: 10/02/2017
Address: 5200 East LA Palma Avenue	CEA/ HERS Certification Identification (if applicable):
City/State/Zip: Anaheim, CA 92807	Phone: 714-693-2277

RESPONSIBLE PERSON'S DECLARATION STATEMENT

I certify the following under penalty of perjury, under the laws of the State of California:
1. The information provided on this Certificate of Compliance is true and correct.
2. I am eligible under Division 3 of the Business and Professions Code to accept responsibility for the building design or system design identified on this Certificate of Compliance (responsible designer).
3. The energy features and performance specifications, materials, components, and manufactured devices for the building design or system design identified on this Certificate of Compliance conform to the requirements of Title 24, Part 1 and Part 6 of the California Code of Regulations.
4. The building design features or system design features identified on this Certificate of Compliance are consistent with the information provided on other applicable compliance documents, worksheets, calculations, plans and specifications submitted to the enforcement agency for approval with this building permit application.
5. I will ensure that a completed signed copy of this Certificate of Compliance shall be made available with the building permit(s) issued for the building, and made available to the enforcement agency for all applicable inspections. I understand that a completed signed copy of this Certificate of Compliance is required to be included with the documentation the builder provides to the building owner at occupancy.

Responsible Designer Name: Abby Banerjee	Responsible Designer Signature:
Company: Optimum Energy Design	Date Signed: 10/02/2017
Address: 5200 East LA Palma Avenue	License: m29253
City/State/Zip: Anaheim, CA 92807	Phone: m29253

ARCHITECTS WLC
CLIENT FOCUSED • PASSION DRIVEN

SOUTHERN CALIFORNIA
8163 ROCHESTER AVENUE, SUITE 100
RANCHO CUCAMONGA
CALIFORNIA 91730-0729
TEL: 909-987-0909
www.wlcarchitects.com

LONGFELLOW ELEMENTARY SCHOOL HVAC REPLACEMENT
COMPTON UNIFIED SCHOOL DISTRICT
1101 S DWIGHT AVE.
COMPTON, CA 90220

LICENSED ARCHITECT — MARK GRAHAM — C-26046 — 03-31-19 — STATE OF CALIFORNIA

REGISTERED PROFESSIONAL ENGINEER — ABBY BANERJEE — No. M29253 — Exp. 6/30/19 — MECHANICAL — STATE OF CALIFORNIA

CONSULTANT

IDENTIFICATION STAMP
DIV. OF THE STATE ARCHITECT
OFFICE OF REGULATION SERVICES
APPL 03-118423
AC — FLS — SS EY
DATE MAR 0 6 2018
FILE: 19-23

NO	DATE	BY	DESCRIPTION
#	REVISIONS		

DRAWN: KC	CHECKED:
DATE: 3/6/2018	SCALE:
PROJECT NUMBER: 570064	

TITLE 24
BUILDING E

DRAWING NUMBER: M-6.3

Project Name:	Longfellow Elementary School - Building F	NRCC-PRF-03-E	Page 1 of 19
Project Address:	1301 S DWIGHT AVE, COMPTON 90220	Calculation Date/Time:	07:26, Mon, Oct 02, 2017
Compliance Scope:	Existing/Alteration	Input File Name:	2017-09-28 Longfellow ES BLDG. F - T-24.ctd6d6x

A. PROJECT GENERAL INFORMATION

1.	Project Location (city)	COMPTON	9.	Standards Version	Compliance2016
2.	CA Zip Code	90220	9.	Compliance Software (version)	EnergyPro 7.1,
4.	Climate Zone	9	10.	Weather File	HAWTHORNE AGRITHROP-RUS_722956_CZ2010.epw
4.	Total Conditioned Floor Area in Scope	5,406 ft²	11.	Building Orientation (deg)	0[0]=Deg
5.	Total Unconditioned Floor Area	888 ft²	12.	Permitted Scope of Work	ExistingAlteration
6.	Total # of Stories (Habitable Above Grade)	1	13	Building Type(s)	Nonresidential
7.	Total # of Dwelling Units	0	14	Elev Type	NaturalGas

B. COMPLIANCE RESULTS FOR PERFORMANCE COMPONENTS (Annual TDV Energy Use, kBtu/ft² -yr) § 140.1

BUILDING COMPLIES

1. Energy Component	2. Standard Design (TDV)	3. Proposed Design (TDV)	4. Compliance Margin (TDV)	5. Percent Better than Standard
Space Heating	3.47	8.11	-4.65	-134.0%
Space Cooling	79.35	72.15	7.20	9.1%
Indoor Fans	97.97	45.37	52.60	53.5%
Heat Rejection	--	--	--	--
Pumps & Misc.	--	--	--	--
Domestic Hot Water	10.64	10.64	--	0.0%
Indoor Lighting	59.03	59.03	--	0.0%
COMPLIANCE TOTAL	**250.32**	**190.97**	**54.95**	**21.9%**
Receptacle	95.70	95.70	0.0	0.0%
Process	--	--	--	--
Other Up	--	--	--	--
TOTAL	**336.02**	**281.47**	**55.4**	**17.4%**

CA Building Energy Efficiency Standards- 2016 Nonresidential Compliance — Report Version: NRCC-PRF-01-E-00B0(2017-4377) — Report Generated at: 2017-10-02 07:42:39

Project Name:	Longfellow Elementary School - Building F	NRCC-PRF-03-E	Page 2 of 19
Project Address:	1301 S DWIGHT AVE, COMPTON 90220	Calculation Date/Time:	07:26, Mon, Oct 02, 2017
Compliance Scope:	Existing/Alteration	Input File Name:	2017-09-28 Longfellow ES BLDG. F - T-24.ctd6d6x

C. PRIORITY HVAC CHECK/ INSPECTION ITEMS (in order of highest to lowest TDV energy savings)

1st:	Indoor Fans: Check envelope and mechanical
2nd	Space Cooling: Check envelope and mechanical
3rd	Heat Rejection: Check envelope and mechanical
4th	Pumps & Misc.: Check mechanical
5th	Domestic Hot Water: Check mechanical
6th	Indoor Lighting: Check lighting
7th	Space Heating: Check envelope and mechanical

Compliance Margin by Energy Component (from Table B column H)

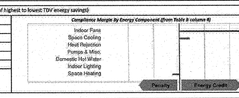

D. EXCEPTIONAL CONDITIONS

The building does not include service water heating. Verify that service water heating is not required and is not included in the design.

E. HERS VERIFICATION

This Section Does Not Apply

F. ADDITIONAL REMARKS

None Provided

CA Building Energy Efficiency Standards- 2016 Nonresidential Compliance — Report Version: NRCC-PRF-01-E-00B0(2017-4377) — Report Generated at: 2017-10-02 07:42:39

Project Name:	Longfellow Elementary School - Building F	NRCC-PRF-03-E	Page 3 of 19
Project Address:	1301 S DWIGHT AVE, COMPTON 90220	Calculation Date/Time:	07:26, Mon, Oct 02, 2017
Compliance Scope:	Existing/Alteration	Input File Name:	2017-09-28 Longfellow ES BLDG. F - T-24.ctd6d6x

G. COMPLIANCE PATH & CERTIFICATE OF COMPLIANCE SUMMARY

Identify within building components use the performance or prescriptive path for compliance. "N/A" not to project.
For components that utilize the performance plan. Indicate the plant number that includes mandatory notes on plans.

Building Component	Compliance Path	Compliance Forms (required for submittal)	Location of Mandatory Notes on Plans
Envelope	☐	Performance	NRCC-PRF-ENV-DETAILS (section of the NRCC-PRF-01-E)	
	☐	Prescriptive	NRCC-ENV-01 / 02 / 03 / 04 / 05 / 06-E	
	☒	N/A		
Mechanical	☒	Performance	NRCC-PRF-MCH-DETAILS (section of the NRCC-PRF-01-E)	
	☐	Prescriptive	NRCC-MCH-01 / 02 / 03 / 04 / 05 / 06 / 07-E	
	☐	N/A		
Domestic Hot Water	☐	Performance	NRCC-PRF-PLB-DETAILS (section of the NRCC-PRF-01-E)	
	☐	Prescriptive	NRCC-PRF-01-E	
	☒	N/A		
Lighting (Indoor Conditioned)	☐	Performance	NRCC-PRF-LTI-DETAILS (section of the NRCC-PRF-01-E)	
	☐	Prescriptive	NRCC-LTI-01 / 02 / 03 / 04 / 05-E	
	☒	N/A		
Covered Process (Commercial Kitchen)	☐	Performance	53 (section of the NRCC-PRF-01-E)	
	☐	Prescriptive	NRCC-PRC-01/ 04-E	
	☒	N/A		
Covered Process (Computer Rooms	☐	Performance	59 (section of the NRCC-PRF-01-E)	
	☐	Prescriptive	NRCC-PRC-02/ 04-E	
	☒	N/A		
Covered Process (Laboratory Exhaust	☐	Performance	54 (section of the NRCC-PRF-01-E)	
	☐	Prescriptive	NRCC-PRC-03/ 04-E	
	☒	N/A		

CA Building Energy Efficiency Standards- 2016 Nonresidential Compliance — Report Version: NRCC-PRF-01-E-00B0(2017-4377) — Report Generated at: 2017-10-02 07:42:39

Project Name:	Longfellow Elementary School - Building F	NRCC-PRF-03-E	Page 4 of 19
Project Address:	1301 S DWIGHT AVE, COMPTON 90220	Calculation Date/Time:	07:26, Mon, Oct 02, 2017
Compliance Scope:	Existing/Alteration	Input File Name:	2017-09-28 Longfellow ES BLDG. F - T-24.ctd6d6x

G. COMPLIANCE PATH & CERTIFICATE OF COMPLIANCE SUMMARY

The following building components are only eligible for prescriptive compliance. Indicate which are relevant to the project. — *The following building components may have mandatory requirements per Part 6. Indicate which are relevant to the project.*

Yes	N/A	Prescriptive Requirement	Compliance Forms	Yes	N/A	Mandatory Requirements	Compliance Forms
☒	☐	Lighting (Indoor Unconditioned) §140.6	NRCC-LTI-01 / 02 / 03 / 04 / 05-E	☐	☒	Commissioning: § 120.2 - Simple Systems Complex Systems	NRCC-CXR-01 / 02 / 03 / 04-E NRCC-CXR-01 / 20 / 04 / 05-E
☐	☒	Lighting (Outdoor) §140.7	NRCC-LTI-01-E / 02 / 03 / 04 / 05-E	☐	☒	Electrical: §130.5	NRCC-ELC-01-E
☐	☒	Lighting (Sign) §140.8	NRCC-LTI-01-E	☐	☒	Solar Ready: §110.10	NRCC-SRA-01 / 03-E
☐	☒	Solar Thermal Water Heating: §140.5	NRCC-LTI-01-E	☐ ☐ ☐ ☐ ☐ ☐	☒	Covered Process: §120.6 - Parking Garage - Commercial Refrigeration - Warehouse Refrigeration - Compressed Air - Process Boilers	NRCC-PRC-01-E NRCC-PRC-02-E NRCC-PRC-03-E NRCC-PRC-04/07/08-E NRCC-PRC-10-E NRCC-PRC-11-E

CA Building Energy Efficiency Standards- 2016 Nonresidential Compliance — Report Version: NRCC-PRF-01-E-00B0(2017-4377) — Report Generated at: 2017-10-02 07:42:39

Project Name:	Longfellow Elementary School - Building F	NRCC-PRF-03-E	Page 5 of 19
Project Address:	1301 S DWIGHT AVE, COMPTON 90220	Calculation Date/Time:	07:26, Mon, Oct 02, 2017
Compliance Scope:	Existing/Alteration	Input File Name:	2017-09-28 Longfellow ES BLDG. F - T-24.ctd6d6x

H. CERTIFICATE OF INSTALLATION, CERTIFICATE OF ACCEPTANCE & CERTIFICATE OF VERIFICATION SUMMARY (NRCI/NRCA/NRCV) –
Documentation Author to indicate which Certificates must be submitted for the features to be recognized for compliance
Obtain copies and verify forms are completed and signed to post in field for Field Inspector to verify.
See Tables 6C and H. in MCH and LTI Details Sections for Acceptance Tests and forms by equipment.

Building Component	Compliance Forms (required for submittal)	Confirmed: Pass	Confirmed: Fail
Envelope	☐ NRCI-ENV-01-E - For all buildings	☐	☐
	☐ NRCA-ENV-02-F - NFRC label verification for fenestration	☐	☐
	☒ NRCI-ENV-03-E - For all buildings with Mechanical Systems	☐	☐
	☐ NRCA-ENV-04-A - Outdoor Air	☐	☐
	☐ NRCA-MCH-03-A - Constant Volume Single Zone HVAC	☐	☐
	☐ NRCA-MCH-04-E - Air Distribution Duct Leakage	☐	☐
	☐ NRCA-MCH-05-A - Air Economizer Controls	☐	☐
	☐ NRCA-MCH-06-A - Demand Control Ventilation	☐	☐
	☒ NRCA-MCH-07-A – Supply Fan Variable Flow Controls	☐	☐
	☐ NRCA-MCH-08-A - Valve Leakage Test	☐	☐
	☐ NRCA-MCH-09-A – Supply Water Temp Reset Controls	☐	☐
	☐ NRCA-MCH-10-A - Hydronic System Variable Flow Controls	☐	☐
	☐ NRCA-MCH-11-A – Auto Demand Shed Controls	☐	☐
	☐ NRCA-MCH-12-A - Packaged Direct Expansion Units	☐	☐
	☐ NRCA-MCH-13-A - Air Handling Units and Zone Terminal Units	☐	☐
	☐ NRCA-MCH-14-A- Stabilized Energy Storage	☐	☐
	☐ NRCA-MCH-15-A – Thermal Energy Storage	☐	☐
	☒ NRCA-MCH-16-A- Supply Air Temp Reset Controls	☐	☐
	☐ NRCA-MCH-17-A – Condensate Water Temp Reset Controls	☐	☐
	☐ NRCA-MCH-18-A- Energy Management Controls Systems	☐	☐
	☐ NRCV-MCH-04-H- Duct Leakage Test	☐	☐

CA Building Energy Efficiency Standards- 2016 Nonresidential Compliance — Report Version: NRCC-PRF-01-E-00B0(2017-4377) — Report Generated at: 2017-10-02 07:42:39

Project Name:	Longfellow Elementary School - Building F	NRCC-PRF-03-E	Page 6 of 19
Project Address:	1301 S DWIGHT AVE, COMPTON 90220	Calculation Date/Time:	07:26, Mon, Oct 02, 2017
Compliance Scope:	Existing/Alteration	Input File Name:	2017-09-28 Longfellow ES BLDG. F - T-24.ctd6d6x

H. CERTIFICATE OF INSTALLATION, CERTIFICATE OF ACCEPTANCE & CERTIFICATE OF VERIFICATION SUMMARY (NRCI/NRCA/NRCV) –
Documentation Author to indicate which Certificates must be submitted for the features to be recognized for compliance
Obtain copies and verify forms are completed and signed to post in field for Field Inspector to verify.
See Tables 6C and H. in MCH and LTI Details Sections for Acceptance Tests and forms by equipment.

Building Component	Compliance Forms (required for submittal)	Confirmed: Pass	Confirmed: Fail
Plumbing	☐ NRCP-PLB-01-E - For all buildings with Plumbing Systems	☐	☐
	☐ NRCI-PLB-02-E - required on central systems in high-rise residential, hotel/motel application.	☐	☐
	☐ NRCI-PLB-03-E - Single dwelling unit systems in high-rise residential, hotel/motel application.	☐	☐
	☐ NRCI-PLB-23-E - HERS verified central systems in high-rise residential, hotel/motel application.	☐	☐
	☐ NRCI-PLB-22-E - HERS verified single dwelling unit systems in high-rise residential, hotel/motel application.	☐	☐
	☐ NRCP-PLB-23 H- HERS verified central systems in high-rise residential, hotel/motel application.	☐	☐
	☐ NRCP-PLB-22 H - HERS verified single dwelling unit systems in high-rise residential, hotel/motel application.	☐	☐
	☐ NRCA-SFM-01-E - Any solar water heating	☐	☐
	☐ NRCI-LTI-01-E – For all buildings	☐	☐
Indoor Lighting	☐ NRCI-LTI-02-E - Lighting control system, or for an Energy Management Control System (EMCS)	☐	☐
	☒ NRCI-LTI-03-E – Line-voltage track lighting integral current limiter, or for a supplementary overcurrent protection panel used to energize only line-voltage track lighting	☐	☐
	☐ NRCI-LTI-04E-Two interlocked systems serving an auditorium, a convention center, a conference room, or a theater	☐	☐
	☐ NRCI-LTI-05-E - Lighting Control Credit Power Adjustment Factor (PAF)	☐	☐
	☐ NRCI-LTI-06-E - Ambulatory/Lobby/Hallwhile a video conferencing studio	☐	☐
	☐ NRCA-LTI-10-A - Occupancy sensors and automatic time switch controls.	☐	☐
Outdoor Lighting	☐ NRCA-LTI-09-A - Automatic daylighting controls	☐	☐
	☐ NRCA-LTI-04-A - Demand responsive lighting controls	☐	☐
	☐ NRCI-LTI-01-E – Outdoor Lighting	☐	☐
	☒ NRCI-LTI-02-E - EMCS Lighting Control System	☐	☒
	☐ NRCA-LTI-02-A – Outdoor Lighting Control	☐	☐
Sign Lighting	☐ NRCI-LTI-03-E – Sign Lighting	☐	☐
Electrical	☐ NRCI-ELC-01-E – Electrical Power Distribution	☐	☐
Photovoltaic	☐ NRCI-SPV-01-E Photovoltaic Systems	☐	☐

CA Building Energy Efficiency Standards- 2016 Nonresidential Compliance — Report Version: NRCC-PRF-01-E-00B0(2017-4377) — Report Generated at: 2017-10-02 07:42:39

Project Name:	Longfellow Elementary School - Building F	NRCC-PRF-03-E	Page 7 of 19
Project Address:	1301 S DWIGHT AVE, COMPTON 90220	Calculation Date/Time:	07:26, Mon, Oct 02, 2017
Compliance Scope:	Existing/Alteration	Input File Name:	2017-09-28 Longfellow ES BLDG. F - T-24.ctd6d6x

H. CERTIFICATE OF INSTALLATION, CERTIFICATE OF ACCEPTANCE & CERTIFICATE OF VERIFICATION SUMMARY (NRCI/NRCA/NRCV) –
Documentation Author to indicate which Certificates must be submitted for the features to be recognized for compliance
Obtain copies and verify forms are completed and signed to post in field for Field Inspector to verify.
See Tables 6C and H. in MCH and LTI Details Sections for Acceptance Tests and forms by equipment.

Building Component	Compliance Forms (required for submittal)	Confirmed: Pass	Confirmed: Fail
Covered Process	☐ NRCP-PRC-01-E Refrigerated Warehouses	☐	☐
	☐ NRCA-PRC-01-E - Compressed Air Systems	☐	☐
	☐ NRCA-PRC-02-F- Kitchen Exhaust	☐	☐
	☐ NRCA-PRC-03-F – Garage Exhaust	☐	☐
	☐ NRCA-PRC-04-F- Refrigerated Warehouses- Evaporator Fan Motor Controls	☐	☐
	☐ NRCA-PRC-05-F- Refrigerated Warehouses- Evaporative Condenser Controls	☐	☐
	☐ NRCA-PRC-06-F- Refrigerated Warehouse- Air Cooled Condenser Controls	☐	☐
	☐ NRCA-PRC-07F- Refrigerated Warehouse- Variable Speed Compressor	☐	☐
	☐ NRCA-PRC-08-F- Electrical Resistance Underslab Heating System	☐	☐

I. ENVELOPE GENERAL INFORMATION (See NRCC-PRF-ENV-DETAILS for more information)

				Confirmed: Pass	Confirmed: Fail
1.	Total Conditioned Floor Area	5,406 ft²	3. Number of Floors Above Grade	1	
2.	Total Unconditioned Floor Area	888 ft²	4. Number of Floors Below Grade	0	
4.	Addition Conditioned Floor Area	0 ft²			
4.	Addition Unconditioned Floor Area	0 ft²			

5. Opaque Surfaces & Orientation	6. Total Gross Surface Area	7. Total Fenestration Area	10. Window to Wall Ratio
North Wall	2,268 ft²	468 ft²	20.6%
East Wall	486 ft²	0 ft²	00.0%
South Wall	2,268 ft²	0 ft²	00.0%
West Wall	0 ft²	0 ft²	00.0%
Total:	5,222 ft²	468 ft²	08.9%
Roof	6,464 ft²	0 ft²	00.0%

CA Building Energy Efficiency Standards- 2016 Nonresidential Compliance — Report Version: NRCC-PRF-01-E-00B0(2017-4377) — Report Generated at: 2017-10-02 07:42:39

Project Name:	Longfellow Elementary School - Building F	NRCC-PRF-03-E	Page 8 of 19
Project Address:	1301 S DWIGHT AVE, COMPTON 90220	Calculation Date/Time:	07:26, Mon, Oct 02, 2017
Compliance Scope:	Existing/Alteration	Input File Name:	2017-09-28 Longfellow ES BLDG. F - T-24.ctd6d6x

I. FENESTRATION ASSEMBLY SUMMARY § 110.6 — Confirmed: Pass / Fail

1. Fenestration Assembly Name / Tag or ID.	2. Fenestration Type / Product Type / Frame Type	3. Certification Method*	4. Assembly Method	5. Area ft²	6. Overall U-factor	7. Overall SHGC	8. Overall VT.	Pass	Fail
Single Metal Clear	Vertical/Fenestration Fixed/Window Metal/Framing	Default Performance	Sitebuilt	468	1.19	0.83	0.72	☐	☐

Hourly modeled fenestration must have a project file (.ribd2x) submitted for the CEC default values found in Table 110.6-A and Table 110.6-B. Center of Glass (COG) values are for the glass only, determined by the rating procedure, and not shown for area of assessment. Site-built fenestration values are calculated per Nonresidential Appendix NA6 and not used in the analysis.

** Tables B-4, B-5, B-6, B-7, B-8, B-9, B-10, B-11, B-12, B-13, B-14, B-15, B-16, B-17, B-18, B-19, B-20, B-21, B-22, B-23, B-24, B-25, B-26, B-27, B-28, B-29, B-30, B-31, B-32, B-33, B-34, B-35, B-36, B-37, B-38, B-39, B-40, B-41, B-42, B-43,

Project Name:	Longfellow Elementary School - Building G	NRCC-PRF-01-E	Page 1 of 19
Project Address:	1101 S DWIGHT AVE. COMPTON 90220	Calculation Date/Time:	07:54, Mon, Oct 02, 2017
Compliance Scope:	Existing/Alteration	Input File Name:	2017-09-28 Longfellow ES BLDG. G - T-24.cbd16x

A. PROJECT GENERAL INFORMATION

1.	Project Location (city)	COMPTON	
2.	CA Zip Code	90220	
3.	Climate Zone	9	
4.	Total Conditioned Floor Area in Scope:	2,639 ft²	
5.	Total Unconditioned Floor Area	466 ft²	
6.	Total # of Stories (Website Above Grade)	1	
7.	Total # of dwelling units	0	
8.	Standards Version	Compliance2016	
9.	Compliance Software (version)	Energy Pro 7.1	
10.	Weather File	HWATHORNE_NORTHROP-RSD_723956_CZ2010.epw	
11.	Building Orientation (deg)	270 deg	
12.	Permitted Scope of Work	Existing/Alteration	
13	Building Type(s)	Nonresidential	
14	Gas Type	Naturalgas	

B. COMPLIANCE RESULTS FOR PERFORMANCE COMPONENTS (Annual TDV Energy Use, kBtu/ft ²-yr) — § 140.1

BUILDING COMPLIES

1. Energy Component	2. Standard Design (TDV)	3. Proposed Design (TDV)	4. Compliance Margin (TDV)	5. Percent Better than Standard
Space Heating	3.58	8.03	-4.45	-124.3%
Space Cooling	79.59	54.51	25.09	31.5%
Indoor Fans	99.43	25.71	73.72	74.1%
Heat Rejection	--	--	--	--
Pumps & Misc.	--	--	--	--
Domestic Hot Water	12.39	12.39	--	0.0%
Indoor Lighting	59.89	59.89	--	0.0%
COMPLIANCE TOTAL	**254.47**	**160.03**	**94.44**	**37.1%**
Receptacle	66.50	65.70	0.8	0.0%
Process	--	--	--	--
Other tbg:				
TOTAL	**320.17**	**233.73**	**94.4**	**29.5%**

CA Building Energy Efficiency Standards- 2016 Nonresidential Compliance — Report Version: NRCC-PRF-01-E-08082017-4377 — Report Generated at: 2017-10-02 07:58:50

Project Name:	Longfellow Elementary School - Building G	NRCC-PRF-01-E	Page 2 of 19
Project Address:	1101 S DWIGHT AVE. COMPTON 90220	Calculation Date/Time:	07:54, Mon, Oct 02, 2017
Compliance Scope:	Existing/Alteration	Input File Name:	2017-09-28 Longfellow ES BLDG. G - T-24.cbd16x

C. PRIORITY PLAN CHECK/ INSPECTION ITEMS (In order of highest to lowest TDV energy savings):

1st	Indoor Fans: Check envelope and mechanical
2nd	Space Cooling: Check envelope and mechanical
3rd	Heat Rejection: Check envelope and mechanical
4th	Pumps & Misc.: Check mechanical
5th	Domestic Hot Water: Check mechanical
6th	Indoor Lighting: Check lighting
7th	Space Heating: Check envelope and mechanical

Compliance Margin by Energy Component (from Table B column 4)

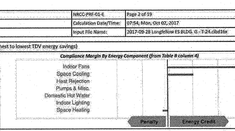

G. EXCEPTIONAL CONDITIONS

The building does not include service water heating. Verify that service water heating is not required and it is not included in the design.

E. HERS VERIFICATION

This Section Does Not Apply

F. ADDITIONAL REMARKS

None Provided

CA Building Energy Efficiency Standards- 2016 Nonresidential Compliance — Report Version: NRCC-PRF-01-E-08082017-4377 — Report Generated at: 2017-10-02 07:58:50

Project Name:	Longfellow Elementary School - Building G	NRCC-PRF-01-E	Page 3 of 19
Project Address:	1101 S DWIGHT AVE. COMPTON 90220	Calculation Date/Time:	07:54, Mon, Oct 02, 2017
Compliance Scope:	Existing/Alteration	Input File Name:	2017-09-28 Longfellow ES BLDG. G - T-24.cbd16x

G. COMPLIANCE PATH & CERTIFICATE OF COMPLIANCE SUMMARY

Identify which building components use the performance or prescriptive path for compliance. "N/A" not in project.
For components that utilize the performance path, indicate the sheet number that includes mandatory notes on plans.

Building Component	Compliance Path	Compliance Forms (required for submittal)	Location of Mandatory Notes on Plans
Envelope	☐ Performance	NRCC-PRF-ENV-DETAILS (section of the NRCC-PRF-01-E)	
	☐ Prescriptive	NRCC-ENV-01 / 02 / 03 / 04 / 05 / 06-E	
	☒ N/A		
Mechanical	☒ Performance	NRCC-PRF-MCH-DETAILS (section of the NRCC-PRF-01-E)	
	☐ Prescriptive	NRCC-MCH-01 / 02 / 03 / 04 / 05 / 06 / 07-E	
	☐ N/A		
Domestic Hot Water	☐ Performance	NRCC-PRF-PLB-DETAILS (section of the NRCC-PRF-01-E)	
	☐ Prescriptive	NRCC-PLB-01-E	
	☒ N/A		
Lighting (Indoor Conditioned)	☐ Performance	NRCC-PRF-LTI-DETAILS (section of the NRCC-PRF-01-E)	
	☐ Prescriptive	NRCC-LTI-01 / 02 / 03 / 04 / 05-E	
	☒ N/A		
Covered Process: Commercial Kitchens	☐ Performance	52 (section of the NRCC-PRF-01-E)	
	☐ Prescriptive	NRCC-PRC-01 / 03-E	
	☒ N/A		
Covered Process: Computer Rooms	☐ Performance	53 (section of the NRCC-PRF-01-E)	
	☐ Prescriptive	NRCC-PRC-02/ 03-E	
	☒ N/A		
Covered Process: Laboratory Exhaust	☐ Performance	54 (section of the NRCC-PRF-01-E)	
	☐ Prescriptive	NRCC-PRC-02/ 03-E	
	☒ N/A		

CA Building Energy Efficiency Standards- 2016 Nonresidential Compliance — Report Version: NRCC-PRF-01-E-08082017-4377 — Report Generated at: 2017-10-02 07:59:50

Project Name:	Longfellow Elementary School - Building G	NRCC-PRF-01-E	Page 4 of 19
Project Address:	1101 S DWIGHT AVE. COMPTON 90220	Calculation Date/Time:	07:54, Mon, Oct 02, 2017
Compliance Scope:	Existing/Alteration	Input File Name:	2017-09-28 Longfellow ES BLDG. G - T-24.cbd16x

G. COMPLIANCE PATH & CERTIFICATE OF COMPLIANCE SUMMARY

The following building components are only eligible for prescriptive compliance. Indicate which are relevant to the project. — *The following building components may have mandatory requirements per Part 6, indicate which are relevant to the project.*

Yes	NA	Prescriptive Requirement	Compliance Forms	Yes	NA	Mandatory Requirement	Compliance Forms
☐	☒	Lighting (Indoor Unconditioned) §140.6	NRCC-LTI-01 / 02 / 03 / 04 / 05-E	☐	☑	Commissioning: §110.8 Simple Systems: Complex Systems:	NRCC-CXR-01 / 02 / 03 / 05-E NRCC-CXR-01 / 02 / 04 / 05-E
☐	☒	Lighting (Outdoor) §147.7	NRCC-LTO-01 / 02 / 03-E	☐	☑	Electrical: §130.5	NRCC-ELC-01-E
☐	☒	Lighting (Sign) §140.8	NRCC-LTI-01-E	☐	☑	Solar Ready: §110.10	NRCC-SRA-01 / 03-E
				☐	☑	Covered Process: §120.6 Parking Garage:	NRCC-PRC-01-E NRCC-PRC-02-E
☐	☒	Solar Thermal Water Heating: §140.5	NRCC-LTI-01-E	☐	☑	Commercial Refrigeration Warehouse Refrigeration	NRCC-PRC-03-E NRCC-PRC-04/05-E
				☐	☑	Compressed Air Process Boilers:	NRCC-PRC-10-E NRCC-PRC-11-E

CA Building Energy Efficiency Standards- 2016 Nonresidential Compliance — Report Version: NRCC-PRF-01-E-08082017-4377 — Report Generated at: 2017-10-02 07:59:50

Project Name:	Longfellow Elementary School - Building G	NRCC-PRF-01-E	Page 5 of 19
Project Address:	1101 S DWIGHT AVE. COMPTON 90220	Calculation Date/Time:	07:54, Mon, Oct 02, 2017
Compliance Scope:	Existing/Alteration	Input File Name:	2017-09-28 Longfellow ES BLDG. G - T-24.cbd16x

H. CERTIFICATE OF INSTALLATION, CERTIFICATE OF ACCEPTANCE & CERTIFICATE OF VERIFICATION SUMMARY (NRCI/NRCA/NRCV) –
Documentation Author to indicate which Certificates must be submitted for the features to be recognized for compliance.
(Retain copies and verify forms are completed and signed to post in field for Field Inspector to verify).
See Tables G, and H, in MCH and ETI Details Sections for Acceptance Tests and forms by equipment.

Building Component	Compliance Forms (required for submittal)	Confirmed: Post	Confirmed: Fail
Envelope	☐ NRCI-ENV-01-E – For all buildings	☐	☐
	☐ NRCA-ENV-02-F- NFRC Label verification for fenestration	☐	☐
	☒ NRCI-MCH-01-E - For all buildings with Mechanical Systems:	☐	☐
	☒ NRCA-MCH-02-A- Outdoor Air	☐	☐
	☐ NRCA-MCH-03-A – Constant Volume Single Zone HVAC	☐	☐
	☐ NRCA-MCH-04-A- Air Distribution Duct Leakage	☐	☐
	☒ NRCA-MCH-05-A- Air Economizer Controls	☐	☐
	☐ NRCA-MCH-06-A- Demand Control Ventilation	☐	☐
	☒ NRCA-MCH-07A-A – Supply Fan Variable Flow Controls	☐	☐
	☐ NRCA-MCH-08-A- Valve Leakage Test	☐	☐
	☐ NRCA-MCH-09-A – Supply Water Temp Reset Controls	☐	☐
	☐ NRCA-MCH-10-A- Hydronic System Variable Flow Controls	☐	☐
	☒ NRCA-MCH-11-A – Auto Demand Shed Controls	☐	☐
	☒ NRCA-MCH-12-A- Packaged Direct Expansion Units	☐	☐
	☐ NRCA-MCH-13-A- Air Handling Units and Zone Terminal Units	☐	☐
	☐ NRCA-MCH-14-A- Distributed Energy Storage	☐	☐
	☐ NRCA-MCH-15-A – Thermal Energy Storage	☐	☐
	☒ NRCA-MCH-16-A- Supply Air Temp Reset Controls	☐	☐
	☐ NRCA-MCH-17A – Condensing Water Temp Reset Controls	☐	☐
	☐ NRCA-MCH-18-A- Energy Management Controls Systems	☐	☐
	☐ NRCV-MCH-04-H- Duct Leakage Test	☐	☐

CA Building Energy Efficiency Standards- 2016 Nonresidential Compliance — Report Version: NRCC-PRF-01-E-08082017-4377 — Report Generated at: 2017-10-02 07:59:50

Project Name:	Longfellow Elementary School - Building G	NRCC-PRF-01-E	Page 6 of 19
Project Address:	1101 S DWIGHT AVE. COMPTON 90220	Calculation Date/Time:	07:54, Mon, Oct 02, 2017
Compliance Scope:	Existing/Alteration	Input File Name:	2017-09-28 Longfellow ES BLDG. G - T-24.cbd16x

H. CERTIFICATE OF INSTALLATION, CERTIFICATE OF ACCEPTANCE & CERTIFICATE OF VERIFICATION SUMMARY (NRCI/NRCA/NRCV) –
Documentation Author to indicate which Certificates must be submitted for the features to be recognized for compliance.
(Retain copies and verify forms are completed and signed to post in field for Field Inspector to verify).
See Tables G, and H, in MCH and ETI Details Sections for Acceptance Tests and forms by equipment.

Building Component	Compliance Forms (required for submittal)	Confirmed: Post	Confirmed: Fail
Plumbing	☐ NRCI-PLB-01-E – For all buildings with Plumbing Systems	☐	☐
	☐ NRCI-PLB-02-E – required on-central systems in high-rise residential, hotel/motel application.	☐	☐
	☐ NRCI-PLB-03-E – Single dwelling unit systems in high-rise residential, hotel/motel application.	☐	☐
	☐ NRCI-PLB-12-E – HERS verified central systems in high-rise residential, hotel/motel application.	☐	☐
	☐ NRCI-PLB-23-E – HERS verified single dwelling unit systems in high-rise residential, hotel/motel application.	☐	☐
	☐ NRCI-PLB-24-N- HERS verified central systems in high-rise residential, hotel/motel application.	☐	☐
	☐ NRCV-PLB-22-H – HERS verified single dwelling unit systems in high-rise residential, hotel/motel application.	☐	☐
	☐ NRCI-STH-01-E – Any solar water heating	☐	☐
Indoor Lighting	☐ NRCI-LTI-01-E – For all buildings	☐	☐
	☐ NRCI-LTI-03-E – Lighting control system, or for an Energy Management Control System (EMCS)	☐	☐
	☐ NRCI-LTI-05-E – Line-voltage track lighting integral current limiter, or for a supplementary overcurrent protective panel used to energize only line-voltage track lighting	☐	☐
	☐ NRCI-LTI-07-E – Two-hole-locked systems serving an auditorium, a convention center, a conference room, or a theater	☐	☐
	☐ NRCI-LTI-05-E – Lighting Control Credit Power Adjustment Factor (PAF)	☐	☐
	☐ NRCI-LTI-06-E – Additional wattage installed in a video conferencing studio	☐	☐
	☐ NRCA-LTI-02-A – Occupancy sensors and automatic time switch controls.	☐	☐
Outdoor Lighting	☐ NRCA-LTI-03-A – Automatic daylighting controls	☐	☐
	☐ NRCA-LTI-04-A – Demand responsive lighting controls	☐	☐
	☐ NRCI-LTO-01-E — Outdoor Lighting	☐	☐
	☐ NRCI-LTO-02-E- EMCS Lighting Control System	☐	☐
	☐ NRCA-LTO-03-A – Outdoor Lighting Control	☐	☐
Sign Lighting	☐ NRCI-LTS-01-E – Sign Lighting:	☐	☐
Electrical	☐ NRCI-ELC-01-E – Electrical Power Distribution:	☐	☐
Photovoltaic	☐ NRCI-LPO-01-E Photovoltaic Systems	☐	☐

CA Building Energy Efficiency Standards- 2016 Nonresidential Compliance — Report Version: NRCC-PRF-01-E-08082017-4377 — Report Generated at: 2017-10-02 07:59:50

Project Name:	Longfellow Elementary School - Building G	NRCC-PRF-01-E	Page 7 of 19
Project Address:	1101 S DWIGHT AVE. COMPTON 90220	Calculation Date/Time:	07:54, Mon, Oct 02, 2017
Compliance Scope:	Existing/Alteration	Input File Name:	2017-09-28 Longfellow ES BLDG. G - T-24.cbd16x

H. CERTIFICATE OF INSTALLATION, CERTIFICATE OF ACCEPTANCE & CERTIFICATE OF VERIFICATION SUMMARY (NRCI/NRCA/NRCV) –
Documentation Author to indicate which Certificates must be submitted for the features to be recognized for compliance.
(Retain copies and verify forms are completed and signed to post in field for Field Inspector to verify).
See Tables G, and H, in MCH and ETI Details Sections for Acceptance Tests and forms by equipment.

Building Component	Compliance Forms (required for submittal)	Confirmed: Post	Confirmed: Fail
Covered Process:	☐ NRCI-PRC-01-E- Refrigerated Warehouse	☐	☐
	☐ NRCI-PRC-03-E- Compressed Air Systems	☐	☐
	☐ NRCI-PRC-03-F- Kitchen Exhaust	☐	☐
	☐ NRCA-PRC-04/05-F- Garage Exhaust	☐	☐
	☐ NRCA-PRC-04/05-F- Refrigerated Warehouse- Evaporator Fan Motor Controls	☐	☐
	☐ NRCA-PRC-05-F- Refrigerated Warehouse- Evaporative Condenser Controls	☐	☐
	☐ NRCA-PRC-07-F- Refrigerated Warehouse- Air Cooled Condenser Controls	☐	☐
	☐ NRCA-PRC-07F- Refrigerated Warehouse- Variable Speed Compressor.	☐	☐
	☐ NRCA-PRC-08-F- Electrical Resistance Underslab Heating System	☐	☐

CA Building Energy Efficiency Standards- 2016 Nonresidential Compliance — Report Version: NRCC-PRF-01-E-08082017-4377 — Report Generated at: 2017-10-02 07:59:50

Project Name:	Longfellow Elementary School - Building G	NRCC-PRF-01-E	Page 8 of 19
Project Address:	1101 S DWIGHT AVE. COMPTON 90220	Calculation Date/Time:	07:54, Mon, Oct 02, 2017
Compliance Scope:	Existing/Alteration	Input File Name:	2017-09-28 Longfellow ES BLDG. G - T-24.cbd16x

I. FENESTRATION ASSEMBLY SUMMARY — § 110.6

1. Fenestration Assembly Name / Tag or I.D.	2. Fenestrative Type / Product Type / Frame Type	3. Certification Method¹	4. Assembly Method	5. Area ft²	6. Overall U-factor	7. Overall SHGC	8. Overall VT	9. Exempt	Confirmed: Pass	Confirmed: Fail
Single Metal Clear	Vertical/Fenestration Fixed/Window Metal/Framing	Default Performance	Slidebilt	234	1.19	0.81	0.77	E	☐	☐

¹ Area weighted Overall U-factor and Overall SHGC and VT can be used for default tables found in Tables 110.6-A and Table 110.6-B. Choice of Glass (COG) values can be for the glass only, determined by the manufacturer/entity and not chosen for most of fenestration. Use each fenestration when values are calculated per Nonresidential Appendix A/NA and one row in the schedule.
² Exempt, N - Area, A – Allowed, E – Existing

Taking compliance credit for fenestration shading devices? (If "Yes", see NRCC-PRF-ENV-DETAILS for more information) — No

K. OPAQUE SURFACE ASSEMBLY SUMMARY — § 120.7/ § 140.3

1. Surface Name	2. Surface Type	3. Area (ft²)	4. Framing Type	5. Cavity R-Value	6. Continuous R-Value	7. U-factor / F-factor / C-factor	Exempt	Confirmed: Pass	Confirmed: Fail
R-13 Wall4	Exterior Wall	3624	Wood	13	NA	U-Factor: 0.114	E	☐	☐
R-13 Roof Cathedral11	Roof	3520	Wood	19	NA	U-Factor: 0.047	E	☐	☐
Slab On Grade13	Underground Floor	3520	NA	0	NA	F-Factor: 0.730	E	☐	☐

* Enter R - Value, A – Allowed, E – Existing

L. ROOFING PRODUCT SUMMARY — § 140.3 — Confirmed: Pass ☐ Fail ☐

1. Product Type	2. Product Density (lb/ft³)	3. Aged Solar Reflectance	4. Thermal Emittance	5. SRI	6. Cool Roof Credit	7. Roofing Product Description	Pass	Fail
R-11 Roof Cathedral11	4.65104	0.08	0.75	NA	No	NA	☐	☐

CA Building Energy Efficiency Standards- 2016 Nonresidential Compliance — Report Version: NRCC-PRF-01-E-08082017-4377 — Report Generated at: 2017-10-02 07:59:50

Project Name:	Longfellow Elementary School - Building G	NRCC-PRF-01-E	Page 9 of 19
Project Address:	1101 S DWIGHT AVE. COMPTON 90220	Calculation Date/Time:	07:54, Mon, Oct 02, 2017
Compliance Scope:	Existing/Alteration	Input File Name:	2017-09-28 Longfellow ES BLDG. G - T-24.cbd16x

M. HVAC SYSTEM SUMMARY (see NRCC-PRF-MCH-DETAILS for more information) — § 110.1 / § 110.2

Dry System Equipment * Dhw & Economizer info included below in Table N)

1. Equip Name	2. Equip Type	3. System Type (Simple ¹ or Complex ²)	4. Qty	5. Total Heating Output (kBtu/h)	6. Equip Heat Source (Y/N)	7. Total Cooling Output (kBtu/h)	8. Efficiency: Cooling	9. Efficiency: Heating	10. Acceptance Testing Required? (Y/N) *	11. Exempt	Confirmed: Pass	Confirmed: Fail
Building G	PVAV (Packaged DX Heat)	Complex	1	518	No	0	110	EER-12.0	AFUE-85.0	Yes	N	☐	☐

¹ Dry System Equipment includes fan-coils, air-handling units, limit zones, etc.
² Simple (systems must comply to NRCC-CEN-02-E and NRCC-CEN-03-E) and Complex (all else) - enter Zone
³ Complex Systems must complete NRCC-CEN-08-E and economizer(s) analysis under figure
* Acceptance Testing Required? Yes or No (Yes is applicable to projects in NRCC-PRF-MCH-DETAILS
** Exempt = N/A, A = Allowed, E = Existing

Unit System Equipment Section Does Not Apply

Discrepancy between modeled and designed equipment sizing? (If "Yes", see Table G "Additional Remarks" for an explanation) — No

N. ECONOMIZER & FAN SYSTEMS SUMMARY* — § 140.4

1. Equip Name	2. Outside Air	3. Supply Fan: CFM	3. Supply Fan: HP	3. Supply Fan: BHP	3. Supply Fan: TSP (Inch WC)	3. Supply Fan: Control	4. Return Fan: CFM	4. Return Fan: HP	4. Return Fan: BHP	4. Return Fan: TSP (Inch WC)	4. Return Fan: Control	5. Economizer Type [if present]	Pass	Fail
Building G	1360	3750	2.620	2.620	2.65	VariableSpeedDrive	NA	NA	NA	NA	NA	FixedDryBulb	☐	☐

* Mechanical ventilation calculations and exhaust fans are declared in the NRCC-PRF-MCH-DETAILS section

CA Building Energy Efficiency Standards- 2016 Nonresidential Compliance — Report Version: NRCC-PRF-01-E-08082017-4377 — Report Generated at: 2017-10-02 07:59:50

Project Name:	Longfellow Elementary School - Building G	NRCC-PRF-01-E	Page 10 of 19
Project Address:	1101 S DWIGHT AVE. COMPTON 90220	Calculation Date/Time:	07:54, Mon, Oct 02, 2017
Compliance Scope:	Existing/Alteration	Input File Name:	2017-09-28 Longfellow ES BLDG. G - T-24.cbd16x

O. EQUIPMENT CONTROLS — § 120.2 — Confirmed: Pass ☐ Fail ☐

1. Equip Name	2. Equip Type	3. Controls	Pass	Fail
Building G	PVAV	No DCV Controls, DCV Controls Fixed Drybulb Economizer Warmest Zone Supply Air Temp. Reset Optimum Start No Evaporative Cooler	☐	☐

P. SYSTEM DISTRIBUTION SUMMARY — § 120.4/ § 140.4(j)

Dry System Distribution — Confirmed: Pass ☐ Fail ☐

1. Equip Name	2. Equip Type	3. Duct Leakage and Sealing Required per 140.4(l)	4. Duct Leakage will be verified per NA1 and NA2	5. Ducts: Insulation R-Value	5. Ducts: Location	Pass	Fail
Building G	PVAV	No	No	8	Unconditioned	☐	☐

Does the Project Include Zonal Systems? (If "Yes", see NRCC-PRF-MCH-DETAILS for system information) — No
Does the Project Include a Solar Hot Water System? (If "Yes", see NRCC-PRF-MCH-DETAILS for system information) — No
Multifamily or Hotel/ Motel Occupancy? (If "Yes", see NRCC-PRF-MCH-DETAILS for DHW system information) — Yes

Q. INDOOR CONDITIONED LIGHTING GENERAL INFO (see NRCC-PRF-LTI-DETAILS for more info)* — § 140.6 — Confirmed

1. Occupancy Type ¹*	2. Conditioned Floor Area ² (ft²)	3. Installed Lighting Power (Watts)	4. Lighting Control Credit: (Watts)	5. Additional (Custom) Allowance: Area Category Footnotes (Watts)	5. Additional (Custom) Allowance: Tailored Method (Watts)	Pass	Fail
						☐	☐
Building Totals:			0	0	0		

¹ See Table 140.6-C
² Non-MCH Conditioned floor area
³ Lighting adjustments for missing lighting controls mandated & not included in the table
* Multiple entries for one Occupancy Type may be lumped in one table as those items have aggregated for Building Totals for ease of use.

CA Building Energy Efficiency Standards- 2016 Nonresidential Compliance — Report Version: NRCC-PRF-01-E-08082017-4377 — Report Generated at: 2017-10-02 07:59:50

Project Name:	Longfellow Elementary School - Building G	NRCC-PRF-01-E	Page 11 of 19
Project Address:	1101 S DWIGHT AVE. COMPTON 90220	Calculation Date/Time:	07:54, Mon, Oct 02, 2017
Compliance Scope:	Existing/Alteration	Input File Name:	2017-09-28 Longfellow ES BLDG. G - T-24.cbd16x

R. INDOOR CONDITIONED LIGHTING SCHEDULE (Adapted from NRCC-LTI-01-E)* — § 130.0

This Section Does Not Apply

* Lighting power densities were used in the compliance model (building /apartments) will need to check juncture plans for luminaire schedule details.

S1. COVERED PROCESS SUMMARY – ENCLOSED PARKING GARAGES — § 140.9

This Section Does Not Apply

S2. COVERED PROCESS SUMMARY – COMMERCIAL KITCHENS — § 140.9

This Section Does Not Apply

S3. COVERED PROCESS SUMMARY – COMPUTER ROOMS — § 140.9

This Section Does Not Apply

S4. COVERED PROCESS SUMMARY – LABORATORY EXHAUSTS — § 140.9

This Section Does Not Apply.

T. UNMET LOAD HOURS

Thermal Zone Name	Cooling Unmet Load Hour Limit for Thermal Zone	Proposed Cooling Unmet Load Hours	Heating Unmet Load Hour Limit for Thermal Zone	Proposed Heating Unmet Load Hours
1-(VAV 1-G) Classroom 1065	150	0	150	2387.5
2-(VAV 2-G) Classroom 1070	150	0	150	257
3-(VAV 3-G) Kinder/Garden 10	150	0	150	320.25
4-(VAV 4-G) Speech Room 101	150	0	150	161.75

U. ENERGY USE SUMMARY

Energy Component	Standard Design Site (kWh)	Proposed Design Site (kWh)	Margin (kWh)	Standard Design Site (kBtu)	Proposed Design Site (kBtu)	Margin (kBtu)
Space Heating	--	--	--	6.0	14.3	-8.3
Space Cooling	6.5	3.3	3.2	--	--	--
Indoor Fans	11.5	2.2	9.3	--	--	--
Heat Rejection	--	--	--	--	--	--

CA Building Energy Efficiency Standards- 2016 Nonresidential Compliance — Report Version: NRCC-PRF-01-E-08082017-4377 — Report Generated at: 2017-10-02 07:59:50

Project Name:	Longfellow Elementary School - Building G	NRCC-PRF-01-E	Page 12 of 19
Project Address:	1101 S DWIGHT AVE. COMPTON 90220	Calculation Date/Time:	07:54, Mon, Oct 02, 2017
Compliance Scope:	Existing/Alteration	Input File Name:	2017-09-28 Longfellow ES BLDG. G - T-24.cbd16x

U. ENERGY USE SUMMARY

Energy Component	Standard Design Site (kWh)	Proposed Design Site (kWh)	Margin (kWh)	Standard Design Site (kBtu)	Proposed Design Site (kBtu)	Margin (kBtu)
Pumps & Misc.	--	--	--	--	--	--
Domestic Hot Water	--	--	--	26.2	24.2	0.0
Indoor Lighting	6.9	6.9	0.0	--	--	--
COMPLIANCE TOTAL	**24.0**	**12.4**	**12.1**	**32.2**	**38.5**	**-8.3**
Receptacle	7.5	7.5	0.0	--	--	--
Process	--	--	--	--	--	--
Other tbg	--	--	--	--	--	--
TOTAL	**32.0**	**19.9**	**12.1**	**32.2**	**38.5**	**-8.3**

CA Building Energy Efficiency Standards- 2016 Nonresidential Compliance — Report Version: NRCC-PRF-01-E-08082017-4377 — Report Generated at: 2017-10-02 07:59:50

Project Name:	Longfellow Elementary School - Building G	NRCC-PRF-01-E	Page 13 of 19
Project Address:	1101 S DWIGHT AVE. COMPTON 90220	Calculation Date/Time:	07:54, Mon, Oct 02, 2017
Compliance Scope:	Existing/Alteration	Input File Name:	2017-09-28 Longfellow ES BLDG. G - T-24.cbd16x

DOCUMENTATION AUTHOR'S DECLARATION STATEMENT — § 10-103

I certify that this Certificate of Compliance documentation is accurate and complete.

Documentation Author Name: Ankul Patel	
Company: Optimum Energy Design	Signature:
Address: 5200 East La Palma Avenue	Signature Date: 10/02/2017
City/State/Zip: Anaheim California 92807	CEA Identification (if applicable):
Phone: (714) 693-2277	

RESPONSIBLE PERSON'S DECLARATION STATEMENT

I certify the following under penalty of perjury, under the laws of the State of California:

1	I hereby affirm that I am eligible under the provisions of Division 3 of the Business and Professions Code to sign this document as the person responsible for its preparation; and that I am licensed in the State of California as a civil engineer, mechanical engineer, electrical engineer, or I am a licensed architect.
2	I affirm that I am eligible under the provisions of Division 3 of the Business and Professions Code by section 5537.2 or 6737.2 to sign this document as the person responsible for its preparation; and that I am a licensed contractor performing this work.
3	I affirm that I am eligible under Section 5 of the Business and Professions Code to sign this document because it pertains to a structure or type of work described in exempt pursuant to Business and Professions Code Sections 5537, 5538 and 6737.1.

Responsible Envelope Designer Name:	Signature: NOT IN SCOPE
Company: Optimum Energy Design	
Address: 5200 East La Palma Avenue	Date Signed:
City/State/Zip: Anaheim California 92807	Declaration Statement Type:
Phone: (714) 693-2277	Title: License #:
Responsible Lighting Designer Name:	Signature: NOT IN SCOPE
Company:	
Address:	Date Signed:
City/State/Zip:	Declaration Statement Type:
Phone:	Title: License #:
Responsible Mechanical Designer Name: Abby Banerjee	Signature:
Company: Optimum Energy Design	
Address: 5200 East La Palma Avenue	Date Signed: 10/02/2017
City/State/Zip: Anaheim California 92807	Declaration Statement Type:
Phone: (714) 693-2277	Title: License #: M29253

CA Building Energy Efficiency Standards- 2016 Nonresidential Compliance — Report Version: NRCC-PRF-01-E-08082017-4377 — Report Generated at: 2017-10-02 07:59:50

Project Name:	Longfellow Elementary School - Building G	NRCC-PRF-01-E	Page 14 of 19
Project Address:	1101 S DWIGHT AVE. COMPTON 90220	Calculation Date/Time:	07:54, Mon, Oct 02, 2017
Compliance Scope:	Existing/Alteration	Input File Name:	2017-09-28 Longfellow ES BLDG. G - T-24.cbd16x

NRCC-PRF-ENV-DETAILS -SECTION START-

A. OPAQUE SURFACE ASSEMBLY DETAILS — Confirmed: Pass ☐ Fail ☐

1. Surface Name	2. Surface Type	3. Description of Assembly Layers	4. Notes
R-13 Wall4	Exterior Wall	Stucco - 7/8 in. Vapor permeable felt - 1/8 in. Wood framed wall, 16in. OC, 3.5in.; R-13 Opaque Board - 1/2 in.	
R-13 Roof Cathedral11	Roof	Asphalt Shingles - 1/4 in. Vapor permeable felt - 1/8 in. Plywood - 1/2 in. Air - Cavity - Wall Roof OC - 4 in. or more Wood framed roof, 16in. OC, 5.5in., R-13 Opaque Board - 1/2 in.	
Slab On Grade13	UndergroundFloor	Slab Type = UnInsulatedSlabOnGrade Insulation Orientation = None Insulation R-Value = R0	

B. OVERHANG DETAILS (Adapted from NRCC-ENV-02-E)

This Section Does Not Apply

C. OPAQUE DOOR SUMMARY — Confirmed: Pass ☐ Fail ☐

1. Opaque Door Assembly Name / Tag or I.D.	2. Door Type	3. Certification Method	4. Operation.	5. Area	6. Overall U-factor	7. Status¹	Pass	Fail
Wood Door7	WoodGreaterThanOrEqual81.75inThickDoor	Default Performance	Swinging	210	0.500	E	☐	☐

¹ Status: N - New, A – Altered, E – Existing

CA Building Energy Efficiency Standards- 2016 Nonresidential Compliance — Report Version: NRCC-PRF-01-E-08082017-4377 — Report Generated at: 2017-10-02 07:59:50

Project Name:	Longfellow Elementary School - Building G	NRCC-PRF-01-E	Page 15 of 19
Project Address:	1101 S DWIGHT AVE. COMPTON 90220	Calculation Date/Time:	07:54, Mon, Oct 02, 2017
Compliance Scope:	Existing/Alteration	Input File Name:	2017-09-28

Project Name:	Longfellow Elementary School - Building K	NRCC-PRF-01-E	Page 3 of 19
Project Address:	1101 S DWIGHT AVE. COMPTON 90220	Calculation Date/Time:	08:04, Mon, Oct 02, 2017
Compliance Scope:	Existing/Alteration	Input File Name:	2017-10-02 Longfellow ES BLDG. K - T-24.cbd16x

C. PRIORITY PLAN CHECK/ INSPECTION ITEMS (in-order of highest to lowest TDV energy savings)

1st	Indoor Fans: Check envelope and mechanical
2nd	Heat Rejection: Check envelope and mechanical
3rd	Pumps & Misc.: Check mechanical
4th	Domestic Hot Water: Check mechanical
5th	Indoor Lighting: Check lighting
6th	Space Cooling: Check envelope and mechanical
7th	Space Heating: Check envelope and mechanical

Compliance Margin By Energy Component (from Table 4 column 4)

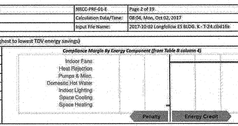

D. EXCEPTIONAL CONDITIONS

The building does not include service water heating. Verify that service water heating is not required and is not included in the design.

E. HERS VERIFICATION

This Section Does Not Apply

F. ADDITIONAL REMARKS

None Provided

CA Building Energy Efficiency Standards- 2016 Nonresidential Compliance | Report Version: NRCC-PRF-01-E-08082017-4377 | Report Generated at: 2017-10-02 08:10:53

Project Name:	Longfellow Elementary School - Building K	NRCC-PRF-01-E	Page 4 of 19
Project Address:	1101 S DWIGHT AVE. COMPTON 90220	Calculation Date/Time:	08:04, Mon, Oct 02, 2017
Compliance Scope:	Existing/Alteration	Input File Name:	2017-10-02 Longfellow ES BLDG. K - T-24.cbd16x

G. COMPLIANCE PATH & CERTIFICATE OF COMPLIANCE SUMMARY

Identify which building components use the performance or prescriptive path for compliance. "N/A" is not in project. For components that utilize the performance path, indicate the short-number that includes mandatory notes on plans.

Building Component	Compliance Path		Compliance Forms *(required for submittal)*	Location of Mandatory Notes on Plans
Envelope	☐	Performance	NRCC-PRF-ENV-DETAILS (section of the NRCC-PRF-01-E)	
	☐	Prescriptive	NRCC-ENV-01 / 02 / 03 / 04 / 05 / 06-E	
	☒	N/A		
Mechanical	☒	Performance	NRCC-PRF-MCH-DETAILS (section of the NRCC-PRF-01-E)	
	☐	Prescriptive	NRCC-MCH-01 / 02 / 03 / 04 / 05 / 06 / 07-E	
	☐	N/A		
Domestic Hot Water	☐	Performance	NRCC-PRF-PLB-DETAILS (section of the NRCC-PRF-01-E)	
	☐	Prescriptive	NRCC-PLB-05-E	
	☒	N/A		
Lighting (Indoor/Conditioned)	☒	Performance	NRCC-PRF-LTI-DETAILS (section of this NRCC-PRF-01-E)	
	☐	Prescriptive	NRCC-LTI-01E / 02 / 03 / 04 / 05-E	
	☒	N/A		
Covered Process: Commercial Kitchens	☐	Performance	12 (section of the NRCC-PRF-01-E)	
	☐	Prescriptive	NRCC-PRC-02-E	
	☒	N/A		
Covered Process: Computer Rooms	☐	Performance	13 (section of the NRCC-PRF-01-E)	
	☐	Prescriptive	NRCC-PRC-01-E	
	☒	N/A		
Covered Process: Laboratory Exhaust	☐	Performance	14 (section of the NRCC-PRF-01-E)	
	☐	Prescriptive	NRCC-PRC-03-E	
	☒	N/A		

CA Building Energy Efficiency Standards- 2016 Nonresidential Compliance | Report Version: NRCC-PRF-01-E-08082017-4377 | Report Generated at: 2017-10-02 08:10:53

Project Name:	Longfellow Elementary School - Building K	NRCC-PRF-01-E	Page 5 of 19
Project Address:	1101 S DWIGHT AVE. COMPTON 90220	Calculation Date/Time:	08:04, Mon, Oct 02, 2017
Compliance Scope:	Existing/Alteration	Input File Name:	2017-10-02 Longfellow ES BLDG. K - T-24.cbd16x

H. CERTIFICATE OF INSTALLATION, CERTIFICATE OF ACCEPTANCE & CERTIFICATE OF VERIFICATION SUMMARY (NRCI/NRCA/NRCV) –
Documentation Author to indicate which Certificates must be submitted for the features to be recognized for compliance (Retain copies and verify forms are completed and signed to post in field for Field Inspector to verify).
See Tables G, and H. in MCH and LTI Details Sections for Acceptance Tests and forms by equipment.

Confirmed

Building Component	Compliance Forms *(required for submittal)*	Pass	Fail
Envelope	☐ NRCI-ENV-01-E *for all buildings*	☐	☐
	☐ NRCA-ENV-02-E - NFRC label verification for fenestration	☐	☐
	☒ NRCI-ENV-03-E - For all buildings with Mechanical Systems:	☐	☐
	☒ NRCA-MCH-02-A: *Outdoor Air*	☐	☐
	☐ NRCA-MCH-03-A – *Constant Volume Single Zone HVAC*	☐	☐
	☐ NRCA-MCH-04-A- Air Distribution Duct Leakage	☐	☐
	☒ NRCA-MCH-05-A- Air Economizer Controls	☐	☐
	☐ NRCA-MCH-06-A- Demand Control Ventilation	☐	☐
	☒ NRCA-MCH-07A.- Supply Fan Variable Flow Controls	☐	☐
	☐ NRCA-MCH-08-A- Valve Leakage Test	☐	☐
	☐ NRCA-MCH-09A.– Supply Water Temp Reset Controls	☐	☐
	☐ NRCA-MCH-10-A- Hydronic System Variable Flow Controls	☐	☐
	☒ NRCA-MCH-11-A. – Auto Demand Shed Controls	☐	☐
	☐ NRCA-MCH-12-A- Packaged Direct Expansion Units	☐	☐
	☐ NRCA-MCH-13-A- Air Handling Units and Zone Terminal Units	☐	☐
	☐ NRCA-MCH-14-A- Distributed Energy Storage	☐	☐
	☐ NRCA-MCH-15-A – Thermal Energy Storage	☐	☐
	☒ NRCA-MCH-16.A- Supply Air Temp Reset Controls	☐	☐
	☐ NRCA-MCH-17-A – Condenscate Water Temp Reset Controls	☐	☐
	☐ NRCA-MCH-18-A- Energy Management Controls Systems	☐	☐
	☐ NRCV-MCH-04-H- Duct Leakage Test	☐	☐

CA Building Energy Efficiency Standards- 2016 Nonresidential Compliance | Report Version: NRCC-PRF-01-E-08082017-4377 | Report Generated at: 2017-10-02 08:10:53

Project Name:	Longfellow Elementary School - Building K	NRCC-PRF-01-E	Page 6 of 19
Project Address:	1101 S DWIGHT AVE. COMPTON 90220	Calculation Date/Time:	08:04, Mon, Oct 02, 2017
Compliance Scope:	Existing/Alteration	Input File Name:	2017-10-02 Longfellow ES BLDG. K - T-24.cbd16x

H. CERTIFICATE OF INSTALLATION, CERTIFICATE OF ACCEPTANCE & CERTIFICATE OF VERIFICATION SUMMARY (NRCI/NRCA/NRCV) –
Documentation Author to indicate which Certificates must be submitted for the features to be recognized for compliance (Retain copies and verify forms are completed and signed to post in field for Field Inspector to verify).
See Tables G, and H. in MCH and LTI Details Sections for Acceptance Tests and forms by equipment.

Confirmed

Building Component	Compliance Forms *(required for submittal)*	Pass	Fail
Plumbing	☐ NRCI-PRC-01-E Refrigerated Warehouse.	☐	☐
	☐ NRCA-PRC-01-E- *Compressed Air Systems*	☐	☐
	☐ NRCA-PRC-03-E- Kitchen Exhood:	☐	☐
	☐ NRCA-PRC-04-E- Garage Exhaust:	☐	☐
	☐ NRCA-PRC-04-F- Refrigerated Warehouse- Evaporator Fan Motor Controls	☐	☐
	☐ NRCA-PRC-05-F- Refrigerated Warehouse- Evaporative Condenser Controls	☐	☐
	☐ NRCA-PRC-06-F- Refrigerated Warehouse- Air Cooled Condenser Controls	☐	☐
	☐ NRCA-PRC-07E- Refrigerated Warehouse- Variable Speed Compressor.	☐	☐
	☐ NRCA-PRC-08-F- Electrical Resistance Underslab Heating System:	☐	☐

CA Building Energy Efficiency Standards- 2016 Nonresidential Compliance | Report Version: NRCC-PRF-01-E-08082017-4377 | Report Generated at: 2017-10-02 08:10:53

Project Name:	Longfellow Elementary School - Building K	NRCC-PRF-01-E	Page 7 of 19
Project Address:	1101 S DWIGHT AVE. COMPTON 90220	Calculation Date/Time:	08:04, Mon, Oct 02, 2017
Compliance Scope:	Existing/Alteration	Input File Name:	2017-10-02 Longfellow ES BLDG. K - T-24.cbd16x

I. ENVELOPE GENERAL INFORMATION (See NRCC-PRF-ENV-DETAILS for more information)

						Confirmed	
1.	Total Conditioned Floor Area :	5,194 ft²	4.	Number of Floors Above Grade	1		
2.	Total Unconditioned Floor Area	768 ft²	5.	Number of Floors Below Grade	0		
3.	Addition Conditioned Floor Area	0 ft²				Pass	Fail
4.	Addition Unconditioned Floor Area	0 ft²					

7. Opaques Surfaces & Orientation	8. Total Gross Surface Area	9. Total Fenestration Area	10. Window to Wall Ratio	Confirmed Pass	Confirmed Fail
North Wall	1,059 ft²	111 ft²	10.5%	☐	☐
East Wall	1,939 ft²	150 ft²	07.8%	☐	☐
South Wall	1,059 ft²	30 ft²	02.8%	☐	☐
West Wall	968 ft²	0 ft²	00.0%	☐	☐
Total	4,933 ft²	293 ft²	05.9%	☐	☐
Roof	3,394 ft²	0 ft²	00.0%	☐	☐

CA Building Energy Efficiency Standards- 2016 Nonresidential Compliance | Report Version: NRCC-PRF-01-E-08082017-4377 | Report Generated at: 2017-10-02 08:10:53

Project Name:	Longfellow Elementary School - Building K	NRCC-PRF-01-E	Page 8 of 19
Project Address:	1101 S DWIGHT AVE. COMPTON 90220	Calculation Date/Time:	08:04, Mon, Oct 02, 2017
Compliance Scope:	Existing/Alteration	Input File Name:	2017-10-02 Longfellow ES BLDG. K - T-24.cbd16x

J. FENESTRATION ASSEMBLY SUMMARY — § 110.6

1. Fenestration Assembly Name / Tag or I.D.	2. Fenestration Type / Product Type / Frame Type	3. Certification Method*	4. Assembly Method	5. Area ft²	6. Overall U-factor	7. Overall SHGC	8. Overall VT	Confirmed Pass	Confirmed Fail
Single Metal Clear	Vertical/Fenestration Fixed/Window Metal/Framing	Default Performance	Slidebolt	325	1.19	0.83	0.77	☐	☐

*Newly installed fenestration shall have a certified NFRC certificate or use the CEC default table found in Table 110.6-A and Table 110.6-B. Energy-Efficiency (EER) values are for the glass only, determined by the manufacturer, but are shown for ease of enforcement. Use default assumptions when not calculated per recommended Appendix NA6 and site-built fen NA analysis.

† Frames: M = Metal, W = Wood, V = Vinyl/Clad

Taking compliance credit for fenestration shading devices? (If "Yes", see NRCC-PRF-ENV-DETAILS for more information)	No

K. OPAQUE SURFACE ASSEMBLY SUMMARY — § 120.7/ § 140.3

1. Surface Name	2. Surface Type	Area (ft²)	3. Framing Type	4. Cavity R-Value	5. Continuous R-Value	6. U-factor / F-Factor / C-Factor	Confirmed Pass	Confirmed Fail
R-22 Wall4	Exterior Wall	1892	Wood	19	NA	U-Factor: 0.112	☐	☐
R-13 Roof Cathedral1E	Roof	4159	Wood	13	NA	U-Factor: 0.067	☐	☐
Slab On Grade14	Underground Floor	4159	NA	0	NA	F-Factor: 0.730	☐	☐
R-13 Wall41	Interior Wall	356	Wood	13	NA	U-Factor: 0.093	☐	☐

† Frames: M = Metal, W = Wood, V = Vinyl/Clad

L. ROOFING PRODUCT SUMMARY — § 140.3

1. Product Type	2. Product Density (lb/ft³)	3. Aged Solar Reflectance	4. Thermal Emittance	5. SRI	6. Cool Roof Credit	7. Roofing Product Description	Confirmed Pass	Confirmed Fail
R-13 Roof Cathedral13	4.00124	0.08	0.75	NA	No	NA	☐	☐

CA Building Energy Efficiency Standards- 2016 Nonresidential Compliance | Report Version: NRCC-PRF-01-E-08082017-4377 | Report Generated at: 2017-10-02 08:10:53

Project Name:	Longfellow Elementary School - Building K	NRCC-PRF-01-E	Page 9 of 19
Project Address:	1101 S DWIGHT AVE. COMPTON 90220	Calculation Date/Time:	08:04, Mon, Oct 02, 2017
Compliance Scope:	Existing/Alteration	Input File Name:	2017-10-02 Longfellow ES BLDG. K - T-24.cbd16x

M. HVAC SYSTEM SUMMARY (see NRCC-PRF-MCH-DETAILS for more information) — § 110.1 / § 110.2

Dry System Equipment * (Fan & Economizer info included below in Table M)

1. Equip Name	2. Equip Type	3. System Type (Simple or Complex*)	4. Qty	5. Total Heating Output (kBtu/h)	6. Supp Heat Source (Y/N)	7. Supp Heat Output (kBtu/h)	8. Total Cooling Output (kBtu/h)	9. Efficiency: Cooling	9. Efficiency: Heating	10. Acceptance Testing Required? (Y/N) +	11. Confirmed: Pass	11. Confirmed: Fail
Building K	PUHV (Parlor.split3Three)	Complex	1	142	No	0	195	EER-12.0	AFUE-81.0	Yes	☐	☐

† Dry-System Equipment includes furnaces, air handling units, fan-coil units, etc.
‡ Simple Systems must complete NRCA-MCH-03-A if cooling capacity is greater than or equal to 54,000 Btu/h.
* Complex Systems must complete NRCA-MCH-04 if constructed using sealed ceiling plenums.
+ Testing is required for all equipment types applicable as provided in NRCC-PRF-MCH-DETAILS
^ Values: N = None, A = Advanced, C = Conventional

Wall System Equipment Section Does Not Apply	
Discrepancy between modelled and designed equipment sizing? (If "Yes", see Table F: "Additional Remarks" for an explanation)	No

N. ECONOMIZER & FAN SYSTEMS SUMMARY* — § 140.4

1. Equip Name	2. Supply Fan: Outside Air	2. Supply Fan: CFM	2. Supply Fan: FHP	2. Supply Fan: BHP	2. Supply Fan: TSP (Inch WC)	2. Supply Fan: Control	3. Return Fan: CFM	3. Return Fan: FHP	3. Return Fan: BHP	3. Return Fan: TSP (Inch WC)	3. Return Fan: Control	4. Economizer Type (if present)	Confirmed: Pass	Confirmed: Fail
Building K	1275	6575	7.500	7.942	4.00	VariableSpeedDrive	NA	NA	NA	NA	NA	FixedDrybulb	☐	☐

* Mechanical ventilation calculations and exhaust fans are included in the NRCC-PRF-MCH-DETAILS section

CA Building Energy Efficiency Standards- 2016 Nonresidential Compliance | Report Version: NRCC-PRF-01-E-08082017-4377 | Report Generated at: 2017-10-02 08:10:53

Project Name:	Longfellow Elementary School - Building K	NRCC-PRF-01-E	Page 10 of 19
Project Address:	1101 S DWIGHT AVE. COMPTON 90220	Calculation Date/Time:	08:04, Mon, Oct 02, 2017
Compliance Scope:	Existing/Alteration	Input File Name:	2017-10-02 Longfellow ES BLDG. K - T-24.cbd16x

O. EQUIPMENT CONTROLS — § 120.2

1. Equip Name	2. Equip Type	3. Controls	Confirmed: Pass	Confirmed: Fail
Building K	PUHV	No DCV Controls; DDC Controls Fixed Drybulb Economizer Warmest Zone-Supply Air Temp. Reset Optimum Start No Evaporative Cooler	☐	☐

P. SYSTEM DISTRIBUTION SUMMARY — § 120.4/ § 140.4(l)

		Dry System Distribution				Confirmed	
1.	2.	3.	4.			Pass	Fail
Equip Name	Equip Type	Duct Leakage and Sealing Required per 140.4(l)	Duct Leakage will be verified per 6A1 and 5A2	Duct Insulation: Insulation R-Value	Location		
Building K	PUHV	No	No	0	Unconditioned	☐	☐

Does the Project include Zonal Systems? (If "Yes", see NRCC-PRF-MCH-DETAILS for system information)	No
Does the Project include a Solar Ready Buffer? (If "Yes", see NRCC-PRF-MCH-DETAILS for system information)	No
Multifamily or Hotel/ Motel Occupancy? (If "Yes", see NRCC-PRF-MCH-DETAILS for DHW system information)	No

Q. INDOOR CONDITIONED LIGHTING GENERAL INFO (see NRCC-PRF-LTI-DETAILS for more info)* — § 140.6

1. Occupancy Type**	2. Conditioned Floor Area † (ft²)	3. Installed Lighting Power (Watts)	4. Lighting Control Credits (Watts)	5. Additional (Custom) Allowance: Area Category Footnotes (Watts)	5. Additional (Custom) Allowance: Tailored Method (Watts)	Confirmed: Pass	Confirmed: Fail
						☐	☐
Building Totals:			0	0	0		

* For Table 140.6-C
** See NRCC-PRF-01-E for space-conditioned spaces :
† Lighting adjustments for walking surface lighting are not included in the table
‡ Multiple zones for an Occupancy Type may not be tallied on the table as the total floor area appropriate for Building Stories that have five-zone floor multipliers

CA Building Energy Efficiency Standards- 2016 Nonresidential Compliance | Report Version: NRCC-PRF-01-E-08082017-4377 | Report Generated at: 2017-10-02 08:10:53

Project Name:	Longfellow Elementary School - Building K	NRCC-PRF-01-E	Page 11 of 19
Project Address:	1101 S DWIGHT AVE. COMPTON 90220	Calculation Date/Time:	08:04, Mon, Oct 02, 2017
Compliance Scope:	Existing/Alteration	Input File Name:	2017-10-02 Longfellow ES BLDG. K - T-24.cbd16x

R. INDOOR CONDITIONED LIGHTING SCHEDULE (Adapted from NRCC-LTI-01-E)* — § 130.0

This Section Does Not Apply

*If lighting power densities were used in the compliance model Building Inspectors will need to check prescriptive forms for luminaire Schedule details.

S1. COVERED PROCESS SUMMARY – ENCLOSED PARKING GARAGES — § 140.9

This Section Does Not Apply

S2. COVERED PROCESS SUMMARY – COMMERCIAL KITCHENS — § 140.9

This Section Does Not Apply

S3. COVERED PROCESS SUMMARY – COMPUTER ROOMS — § 140.9

This Section Does Not Apply

S4. COVERED PROCESS SUMMARY – LABORATORY EXHAUSTS — § 140.9

This Section Does Not Apply

T. UNMET LOAD HOURS

Thermal Zone Name	Cooling Unmet Load Hour Limit for Thermal Zone	Proposed Cooling Unmet Load Hours	Heating Unmet Load Hour Limit for Thermal Zone	Proposed Heating Unmet Load Hours
1-(UNI 1-K) KinderGarten 11	150	0	150	154.25
2-(UNI 2-K) KinderGarten CL	150	0	150	208.5
3-(UNI 3-K) KinderGarten 10	150	0	150	244.25

U. ENERGY USE SUMMARY

Energy Component	Standard Design Site (MWh)	Proposed Design Site (MWh)	Margin (MWh)	Standard Design Site (MBtu)	Proposed Design Site (MBtu)	Margin (MBtu)
Space Heating	—	—	—	6.4	15.3	-8.9
Space Cooling	6.3	6.5	-0.2	—	—	—
Indoor Fans	17.6	8.3	13.3	—	—	—
Heat Rejection	—	—	—	—	—	—
Pumps & Misc.	—	—	—	—	—	—

CA Building Energy Efficiency Standards- 2016 Nonresidential Compliance | Report Version: NRCC-PRF-01-E-08082017-4377 | Report Generated at: 2017-10-02 08:10:53

Project Name:	Longfellow Elementary School - Building K	NRCC-PRF-01-E	Page 12 of 19
Project Address:	1101 S DWIGHT AVE. COMPTON 90220	Calculation Date/Time:	08:04, Mon, Oct 02, 2017
Compliance Scope:	Existing/Alteration	Input File Name:	2017-10-02 Longfellow ES BLDG. K - T-24.cbd16x

U. ENERGY USE SUMMARY

Energy Component	Standard Design Site (kWh)	Proposed Design Site (kWh)	Margin (kWh)	Standard Design Site (MBtu)	Proposed Design Site (MBtu)	Margin (MBtu)
Domestic Hot Water	—	—	—	17.5	17.3	0.0
Indoor Lighting	8.3	8.3	0.0	—	—	—
COMPLIANCE TOTAL	31.2	18.7	13.5	35.7	42.6	-8.9
Receptacle	9.0	9.0	0.0	—	—	—
Process	—	—	—	—	—	—
Other Ltg	—	—	—	—	—	—
TOTAL	41.3	27.7	13.5	35.7	42.6	-8.9

CA Building Energy Efficiency Standards- 2016 Nonresidential Compliance | Report Version: NRCC-PRF-01-E-08082017-4377 | Report Generated at: 2017-10-02 08:10:53

Project Name:	Longfellow Elementary School - Building K	NRCC-PRF-01-E	Page 13 of 19
Project Address:	1101 S DWIGHT AVE. COMPTON 90220	Calculation Date/Time:	08:04, Mon, Oct 02, 2017
Compliance Scope:	Existing/Alteration	Input File Name:	2017-10-02 Longfellow ES BLDG. K - T-24.cbd16x

DOCUMENTATION AUTHOR'S DECLARATION STATEMENT — § 10-103

I certify that this Certificate of Compliance documentation is accurate and complete.

Documentation Author Name: Jaisal Patel	Signature:
Company: Optimum Energy Design	Signature Date: 10/02/2017
Address: 5200 East La Palma Avenue	CEA/ Verification ID (if applicable):
City/State/Zip: Anaheim California 92807	
Phone: (714)693-2277	

RESPONSIBLE PERSON'S DECLARATION STATEMENT

I certify the following under penalty of perjury, under the laws of the State of California:

1	I hereby affirm that I am eligible under the provisions of Division 3 of the Business and Professions Code to sign this document as the person responsible for its preparation; and that I am licensed in the State of California as a civil engineer, mechanical engineer, electrical engineer, or I am a licensed architect.
2	I affirm that I am eligible under the provisions of Division 3 of the Business and Professions Code by section 5537.2 or 6737.3 to sign this document as the person responsible for its preparation; and that I am a licensed contractor performing this work.
3	I affirm that I am eligible under Division 3 of the Business and Professions Code or sign this document because it pertains to a structure or type of work described as exempt pursuant to Business and Professions Code Sections 5537, 5538 and 6737.1.

Responsible Envelope Designer Name:	Signature: NOT IN SCOPE
Company: Optimum Energy Design	Date Signed:
Address: 5200 East La Palma Avenue	Declaration Statement Type:
City/State/Zip: Anaheim California 92807	Title: License #:
Phone: (714) 693-2277	
Responsible Lighting Designer Name:	Signature: NOT IN SCOPE
Company:	Date Signed:
Address:	Declaration Statement Type:
City/State/Zip:	Title: License #:
Responsible Mechanical Designer Name: Abby Banerjee	Signature:
Company: Optimum Energy Design	Date Signed: 10/02/2017
Address: 5200 East La Palma Avenue	Declaration Statement Type:
City/State/Zip: Anaheim California 92807	Title: License #: M29253
Phone: (714) 693-2277	

CA Building Energy Efficiency Standards- 2016 Nonresidential Compliance | Report Version: NRCC-PRF-01-E-08082017-4377 | Report Generated at: 2017-10-02 08:10:53

Project Name:	Longfellow Elementary School - Building K	NRCC-PRF-01-E	Page 14 of 19
Project Address:	1101 S DWIGHT AVE. COMPTON 90220	Calculation Date/Time:	08:04, Mon, Oct 02, 2017
Compliance Scope:	Existing/Alteration	Input File Name:	2017-10-02 Longfellow ES BLDG. K - T-24.cbd16x

NRCC-PRF-ENV-DETAILS -SECTION START-

A. OPAQUE SURFACE ASSEMBLY DETAILS

1. Surface Name	2. Surface Type	3. Description of Assembly Layers	4. Notes	Confirmed: Pass	Confirmed: Fail
R-13 Wall4	Exterior Wall	Stucco - 7/8 in. Vapor permeable felt - 3/8 in. Wood framed wall, 16in. OC, 3.5in.; R-13 Exposed Batt - 1/2 in.		☐	☐
R-13 Roof Cathedral02	Roof	Asphalt shingles - 1/4 in. Vapor permeable felt - 1/8 in. Plywood - 1/2 in. Air - Cavity - Wall Roof Ceiling - 4 in. or more Wood framed roof, 16in. OC, 5.5in.; R-13 Exposed Batt - 1/2 in.		☐	☐
Slab On Grade14	Underground Floor	Slab Type = UnheatedSlabOnGrade Insulation Orientation = None Insulation R-Value = R0		☐	☐
R-13 Wall41	Interior Wall	Stucco - 7/8 in. Vapor permeable felt - 3/8 in. Wood framed wall, 16in. OC, 3.5in.; R-13 Exposed Batt - 1/2 in.		☐	☐

B. OVERHANG DETAILS (Adapted from NRCC-ENV-02-E)

This Section Does Not Apply.

C. OPAQUE DOOR SUMMARY — Confirmed

1. Opaque Door Assembly Name / Tag or I.D.	2. Door Type	3. Certification Method	4. Operation	5. Area	6. Overall U-factor	7. Status†	Pass	Fail
Wood Door2	WoodAlmostHalfGlassWithLT50PctGlass	DefaultPerformance	Swinging	108	0.560	E	☐	☐

† Status: N = New, E = Altered, C = Existing

CA Building Energy Efficiency Standards- 2016 Nonresidential Compliance | Report Version: NRCC-PRF-01-E-08082017-4377 | Report Generated at: 2017-10-02 08:10:53

Project Name:	Longfellow Elementary School - Building K	NRCC-PRF-01-E	Page 15 of 19
Project Address:	1101 S DWIGHT AVE. COMPTON 90220	Calculation Date/Time:	08:04, Mon, Oct 02, 2017
Compliance Scope:	Existing/Alteration	Input File Name:	2017-10-02 Longfellow ES BLDG. K - T-24.cbd16x

NRCC-PRF-MCH-DETAILS -SECTION START-

A. MECHANICAL VENTILATION AND REHEAT *(Adapted from 2016-NRCC-MCH-03-E)* — Confirmed

1. DESIGN AIR FLOWS												2. VENTILATION (§ 120.1)												Confirmed	
CONDITIONED ZONE NAME	ID	DESIGN SPACE OCCUPANCY	DESIGN AIR FLOW	MINIMUM OUTDOOR AIR FLOW	MINIMUM EXHAUST AIR FLOW	MINIMUM RECIRCULATION AIR FLOW	MINIMUM OUTDOOR AIR FRACTION	MINIMUM SUPPLY AIR TEMPERATURE	MAXIMUM SUPPLY AIR TEMPERATURE	MAXIMUM ZONE AIR TEMPERATURE	DESIGN HEATING LOAD	VENT SYSTEM ID	OCCUPANCY TYPE	AREA	PEOPLE	OUTDOOR AIR RATE	MIN. OUTDOOR AIR FLOW	MIN. EXHAUST AIR FLOW	MIN. RECIRCULATION AIR FLOW	MIN. OUTDOOR AIR FRACTION	DESIGN SUPPLY AIR TEMP	DESIGN ZONE AIR TEMP	TRANSFER AIR	OCCUPANT DIVERSITY	Controls & Minimum Stops (see § 140.1 and 140.2(b)1)	Pass	Fail
1-(UNI 1-K) KinderGarten 11	Building K	2,000	400	0.20	NA	NA	Y	Building K	1,058	NA	25	15.0	981	281	NA	N	NA								☐	☐
2-(UNI 2-K) KinderGarten CL	Building K	2,800	560	0.20	NA	NA	Y	Building K	1,363	NA	34	15.0	511	511	NA	N	NA								☐	☐
3-(UNI 3-K) KinderGarten 10	Building K	3,200	400	0.16	NA	NA	Y	Building K	1,036	NA	25	15.0	381	381	NA	N	NA								☐	☐
								TOTAL	4,162			NA		NA	NA										☐	☐

B. ZONAL SYSTEM AND TERMINAL UNIT SUMMARY — § 140.4

1. System ID	2. System Type	3. Qty	4. Rated Capacity (kBtu/h) Heating	4. Rated Capacity (kBtu/h) Cooling	5. Economizer	6. Zone Name	7. Airflow (cfm) Design	7. Airflow (cfm) Min. Ratio	8. Fan BHP	8. Fan Cyclics	8. Fan ECM Motor	Confirmed: Pass	Confirmed: Fail
3-(UNI 3-K) KinderGarten 10-Trm	VAVReheatNoMax	1	NA	NA	NA	3-(UNI 3-K) KinderGarten 10	2000	400	0.29	NA	NA	☐	☐
2-(UNI 2-K) KinderGarten CL-Trm	VAVReheatNoMax	1	NA	NA	NA	2-(UNI 2-K) KinderGarten CL	2800	560	0.29	NA	NA	☐	☐
1-(UNI 1-K) KinderGarten 11-Trm	VAVReheatNoMax	1	NA	NA	NA	1-(UNI 1-K) KinderGarten 11	2000	400	0.29	NA	NA	☐	☐

CA Building Energy Efficiency Standards- 2016 Nonresidential Compliance | Report Version: NRCC-PRF-01-E-08082017-4377 | Report Generated at: 2017-10-02 08:10:53

Project Name:	Longfellow Elementary School - Building K	NRCC-PRF-01-E	Page 16 of 19
Project Address:	1101 S DWIGHT AVE. COMPTON 90220	Calculation Date/Time:	08:04, Mon, Oct 02, 2017
Compliance Scope:	Existing/Alteration	Input File Name:	2017-10-02 Longfellow ES BLDG. K - T-24.cbd16x

C. EXHAUST FAN SUMMARY

This Section Does Not Apply

D. DHW EQUIPMENT SUMMARY – *(Adapted from NRCC-PLB-01)*

This Section Does Not Apply

E. MULTI-FAMILY CENTRAL DHW SYSTEM DETAILS

This Section Does Not Apply

F. SOLAR HOT WATER HEATING SUMMARY (Adapted from NRCC-STH-01)

This Section Does Not Apply

G. MECHANICAL HVAC ACCEPTANCE TESTS & FORMS *(Adapted from 2016-NRCC-MCH-01-E)* — § RA4

Declaration of Required Acceptance Certificates (NRCA) – Acceptance Certificates that may be submitted. (Retain copies and verify forms are completed and signed to post in field for Field Inspector to verify).

Test Description	NRCA-MCH-02-A	NRCA-MCH-03-A	NRCA-MCH-04-A	NRCA-MCH-05-A	NRCA-MCH-06-A	NRCA-MCH-07-A	NRCA-MCH-08-A	NRCA-MCH-09-A	NRCA-MCH-10-A	NRCA-MCH-11-A	NRCA-MCH-12-A	NRCA-MCH-13-A	NRCA-MCH-14-A	NRCA-MCH-15-A	NRCA-MCH-16-A	NRCA-MCH-17-A	NRCA-MCH-18-A	Confirmed: Pass	Confirmed: Fail
Equipment Requiring Testing or Verification	Outdoor Air	Single Zone Systems	Air Duct Leaks	Economizer Controls	DCV	Variable Flow Systems	Valve Leakage	Supply Water Temp Reset	Hydronic Variable Flow Control	Auto Demand Shed Controls	Packaged DX Units	Air Handling Units and Zone Terminal Units	Distributed Energy Storage	Thermal Energy Storage	Supply Air Temp Reset Controls	Condenser Water Temp Reset Controls	Energy Management Control Systems		
Nonhydronic Heating/Cooling Systems	—	—	—	—	—	—	—	—	—	—	—	—	—	—	—	—	—	☐	☐
Building K	X	—	—	X	—	X	—	—	—	—	—	X	—	—	—	—	—	☐	☐

H. EVAPORATIVE COOLER SUMMARY

This Section Does Not Apply

CA Building Energy Efficiency Standards- 2016 Nonresidential Compliance | Report Version: NRCC-PRF

GENERAL NOTES

1. THIS CONTRACTOR SHALL SUPPLY POWER TO AND MAKE CONNECTION TO ALL MOTORS AND EQUIPMENT REQUIRING ELECTRICAL CONNECTIONS AS SHOWN ON THE MECHANICAL AND PLUMBING DRAWINGS, INCLUDING ALL FRACTIONAL HORSEPOWER MOTORS. IT SHALL BE THE RESPONSIBILITY OF THE CONTRACTOR TO REVIEW THE MECHANICAL AND PLUMBING DRAWINGS FOR DUCTS, LINES AND EQUIPMENT.

2. ALL COMMUNICATIONS WORK SHALL BE COORDINATED WITH THE COMMUNICATION SYSTEMS EQUIPMENT MANUFACTURER AND THE SCHOOL DISTRICT MAINTENANCE DEPARTMENT PRIOR TO ROUGH -IN AND INSTALLATION OF ANY AND ALL COMMUNICATION SYSTEM DEVICES AND RELATED CONDUIT AND WIRE.

3. THE CONTRACTOR SHALL SECURE AND PAY FOR PERMITS AND FEES NECESSARY FOR EXECUTION AND COMPLETION OF ELECTRICAL WORK, INCLUDING ALL CHARGES BY THE LOCAL GOVERNMENT AGENCIES AND THE UTILITY COMPANIES.

4. UNLESS OTHERWISE NOTED, MOUNTING HEIGHTS INDICATED ON ELECTRICAL OUTLETS ARE FROM FINISHED FLOOR TO CENTER OF OUTLETS.

5. NO CONDUIT SHALL BE RUN HORIZONTALLY IN CONCRETE FLOOR SLABS.

6. ALL FINAL CONNECTIONS TO OWNER-FURNISHED EQUIPMENT SHALL BE MADE BY THIS CONTRACTOR.

7. MEP COMPONENT ANCHORAGE NOTE

ALL MECHANICAL, PLUMBING, AND ELECTRICAL COMPONENTS SHALL BE ANCHORED AND INSTALLED PER THE DETAILS ON THE DSA APPROVED CONSTRUCTION DOCUMENTS. WHERE NO DETAIL IS INDICATED, THE FOLLOWING COMPONENTS SHALL BE ANCHORED OR BRACED TO MEET THE FORCE AND DISPLACEMENT REQUIREMENTS PRESCRIBED IN THE 2016 CBC, SECTIONS 1616A.1.18 THROUGH 1616A.1.26 AND ASCE 7-10 CHAPTER 13, 26 AND 30.

1. ALL PERMANENT EQUIPMENT AND COMPONENTS.
2. TEMPORARY OR MOVABLE EQUIPMENT THAT IS PERMANENTLY ATTACHED (E.G. HARD WIRED) TO THE BUILDING UTILITY SERVICES SUCH AS ELECTRICITY, GAS OR WATER.
3. MOVABLE EQUIPMENT WHICH IS STATIONED IN ONE PLACE FOR MORE THAN 8 HOURS AND HEAVIER THAN 400 POUNDS OR HAS A CENTER OF MASS LOCATED 4 FEET OR MORE ABOVE THE ADJACENT FLOOR OR ROOF LEVEL THAT DIRECTLY SUPPORT THE COMPONENT ARE REQUIRED TO BE ANCHORED WITH TEMPORARY ATTACHMENT.

THE FOLLOWING MECHANICAL AND ELECTRICAL COMPONENTS SHALL BE POSITIVELY ATTACHED TO THE STRUCTURE, BUT THE ATTACHMENT NEED NOT BE DETAILED ON THE PLANS. THESE COMPONENTS SHALL HAVE FLEXIBLE CONNECTIONS PROVIDED BETWEEN THE COMPONENT AND ASSOCIATED DUCTWORK, PIPING, AND CONDUIT.

A. COMPONENTS WEIGHING LESS THAN 400 POUNDS AND HAVE A CENTER OF MASS LOCATED 4 FEET OR LESS ABOVE THE ADJACENT FLOOR OR ROOF LEVEL THAT DIRECTLY SUPPORT THE COMPONENT.

B. COMPONENTS WEIGHING LESS THAN 20 POUNDS, OR IN THE CASE OF DISTRIBUTED SYSTEMS, LESS THAN 5 POUNDS PER FOOT, WHICH ARE SUSPENDED FROM A ROOF OR FLOOR OR HUNG FROM A WALL.

FOR THOSE ELEMENTS THAT DO NOT REQUIRE DETAILS ON THE APPROVED DRAWINGS, THE INSTALLATION SHALL BE SUBJECT TO THE APPROVAL OF THE DESIGN PROFESSIONAL IN GENERAL RESPONSIBLE CHARGE OR STRUCTURAL ENGINEER DELEGATED RESPONSIBILITY AND THE DSA DISTRICT STRUCTURAL ENGINEER. THE PROJECT INSPECTOR WILL VERIFY THAT ALL COMPONENTS AND EQUIPMENT HAVE BEEN ANCHORED IN ACCORDANCE WITH ABOVE REQUIREMENTS.

PIPING, DUCTWORK, AND ELECTRICAL DISTRIBUTION SYSTEM BRACING NOTE

PIPING, DUCTWORK, AND ELECTRICAL DISTRIBUTION SYSTEMS SHALL BE BRACED TO COMPLY WITH THE FORCES AND DISPLACEMENTS PRESCRIBED IN ASCE 7-10 SECTION 13.3 AS DEFINED IN ASCE 7-10 SECTION 13.6.5.6, 13.6.7, 13.6.8, AND 2016 CBC, SECTIONS 1616A.1.24, 1616A.1.25 AND 1616A.1.26.

THE METHOD OF SHOWING BRACING AND ATTACHMENTS TO THE STRUCTURE FOR THE IDENTIFIED DISTRIBUTION SYSTEM ARE AS NOTED BELOW. WHEN BRACING AND ATTACHMENTS ARE BASED ON A PREAPPROVED INSTALLATION GUIDE (E.G., SMACNA OR OSHPD OPM), COPIES OF THE BRACING SYSTEM INSTALLATION GUIDE OR MANUAL SHALL BE AVAILABLE ON THE JOBSITE PRIOR TO THE START OF AND DURING THE HANGING AND BRACING OF THE DISTRIBUTION SYSTEMS. THE STRUCTURAL ENGINEER OF RECORD SHALL VERIFY THE ADEQUACY OF THE STRUCTURE TO SUPPORT THE HANGER AND BRACE LOADS.

MECHANICAL PIPING (MP), MECHANICAL DUCTS (MD), PLUMBING PIPING (PP), ELECTRICAL DISTRIBUTION SYSTEM (E):

MP☐MD☐PP☐ E☒ – OPTION 1: DETAILED ON THE APPROVED DRAWINGS WITH PROJECTS SPECIFIC NOTES AND DETAILS.

MP☐MD☐PP☐ E☐ – OPTION 2: SHALL COMPLY WITH THE APPLICABLE OSHPD PRE-APPROVAL (OPM #) # _____ .

MP☐MD☐PP☐ – OPTION 3: SHALL COMPLY WITH SMACNA SEISMIC RESTRAINT MANUAL, OSHPD EDITION (2009), INCLUDING ANY ADDENDA. FASTENERS AND OTHER ATTACHMENTS NOT SPECIFICALLY IDENTIFIED IN THE SMACNA SEISMIC RESTRAINT MANUAL, OSHPD EDITION, ARE DETAILED ON THE APPROVED DRAWING WITH PROJECT SPECIFIC NOTES AND DETAILS. THE DETAILS SHALL ACCOUNT FOR THE APPLICABLE SEISMIC HAZARD LEVEL _____ AND CONNECTION LEVEL_____ FOR THE PROJECT AND CONDITIONS.

8. SHUT DOWN OF EXISTING ELECTRICAL SYSTEMS SERVING THE REST OF THE SCHOOL WILL NOT BE ALLOWED.

9. THIS CONTRACTOR SHALL COORDINATE ALL LINE AND LOW VOLTAGE COMPONENTS AND WIRING TYPES TO, MATCH EXISTING SYSTEMS, WITH THE SCHOOL DISTRICT PRIOR TO BID AND INCLUDE ALL COSTS FOR A COMPLETE OPERABLE SYSTEM EXPANSION.

10. ALL EXPOSED CONDUIT AND ELECTRICAL EQUIPMENT SUPPORT INFRASTRUCTURE SHALL BE PAINTED TO MATCH EXISTING FINISH. COLOR TO BE SELECTED BY THE OWNER. SEE SPECIFICATION 26 00 00 SECTION 2.1 I(1).

11. THE NUMERAL(S) SHOWN AT TOP LIGHT FIXTURE IDENTIFICATION SYMBOL WHICH INDICATES NUMBER OF LIGHT FIXTURES REQUIRED SHALL NOT BE USED BY THE CONTRACTOR FOR HIS QUANTITY TAKE-OFF AT BIDDING OR FOR DETERMINATION OF HOW MANY FIXTURES WILL BE INSTALLED. THE CONTRACTOR SHALL INSTALL A LIGHT FIXTURE WHEREVER A FIXTURE OUTLET IS SHOWN ON DRAWINGS.

12. IDENTIFICATION NAME PLATES FOR PANELS AND SWITCHBOARDS/DISTRIBUTION PANEL FEEDER CIRCUIT BREAKERS SHALL MATCH THE NOMENCLATURE PROVIDED BY THE OWNER AT THE END OF THE CONTRACT.

13. ALL EXTERIOR MOUNTED EQUIPMENT SHALL BE WEATHERPROOF AND PROVIDED IN A WEATHERPROOF ENCLOSURE.

14. INSTALL RACEWAY SYSTEMS AS FOLLOWS:

A. RIGID GALVANIZED STEEL IN ALL OUTDOOR LOCATIONS AND IN INDOOR LOCATIONS WHERE SUBJECT TO PHYSICAL DAMAGE.

B. I.M.C. OR E.M.T. IN ALL INDOOR AREAS.

C. FLEXIBLE METAL CONDUIT FOR FINAL CONNECTIONS TO LIGHT FIXTURES, MOTORS, VIBRATING ELECTRICAL EQUIPMENT AND HORIZONTAL RUNS IN WOOD STUD WALLS.

D. PVC CONDUIT FOR UNDERGROUND RUNS. USE 20 MIL PVC TAPED RIGID STEEL RISER ELBOWS AND RISERS FOR CONDUIT STUB-UPS.

E. USE COMPRESSION TYPE FITTINGS FOR ALL METALLIC CONDUIT.

F. 1" CONDUIT MINIMUM FOR UNDERGROUND INSTALLATIONS.

15. ALL NEW WIRING SHALL BE COPPER.

16. PROVIDE THE OWNER AND THIS ENGINEER WITH ONE SET OF ELECTRICAL "AS-BUILTS" AT THE COMPLETION OF JOB.

17. CONDUIT ROUTING INDICATED ON THESE PLANS IS DIAGRAMMATIC. ACTUAL ROUTING OF CONDUITS SHALL BE COORDINATED IN THE FIELD TO AVOID INTERFERENCE WITH OTHER UTILITIES AND TRADES. THE CONTRACTOR SHALL INSTALL ALL CONDUIT, JUNCTION/PULL BOXES, ETC., AS REQUIRED FOR A COMPLETE SYSTEM IN FULL COMPLIANCE WITH ALL APPLICABLE CODES.

18. ALL OUTLET LOCATIONS SHALL BE COORDINATED WITH ARCHITECTURAL ELEVATIONS PRIOR TO INSTALLATION.

19. NOT USED.

20. ELECTRICAL CONTRACTOR SHALL PERFORM ALL WORK IN STRICT ACCORDANCE WITH GOVERNING CODES.

21. ALL EQUIPMENT SHALL BE NEW AND BEAR A "UL" LABEL – U.O.N..

22. COMPLETE ELECTRICAL INSTALLATION SHALL BE GUARANTEED IN WRITING FOR A PERIOD OF (1) YEAR – U.O.N..

23. ELECTRICAL CONTRACTOR SHALL VISIT SITE PRIOR TO BID DATE, TO VERIFY ALL EXISTING CONDITIONS TO BE ENCOUNTERED IN THE INSTALLATION OF ALL NEW EQUIPMENT, FIXTURES DEVICES, FEEDERS, ETC.. EXACT INSTALLATION METHOD AND REQUIREMENTS SHALL BE VERIFIED AND DETERMINED PRIOR TO BID DATE. CONTRACTORS SHALL IMMEDIATELY NOTIFY THIS ENGINEER OF ANY REQUIRED MODIFICATIONS WHICH ARE NOT SHOWN ON THESE DRAWINGS. SUBMITTAL OF BID INDICATES CONTRACTOR IS COGNIZANT OF ALL JOB SITE CONDITIONS AND WORK TO BE PERFORMED.

24. ALL EQUIPMENT ELECTRICAL CHARACTERISTICS, LOCATIONS, AND CONNECTION REQUIREMENTS SHALL BE VERIFIED PRIOR TO ANY ROUGH-IN WORK.

25. ALL POWER AND LIGHTING BRANCH CIRCUITS SHALL BE INSTALLED WITH A #12 GREEN GROUND WIRE U.O.N. THE COMPLETE ELECTRICAL SYSTEM SHALL BE GROUNDED IN ACCORDANCE WITH ARTICAL 250 OF THE CALIFORNIA ELECTRICAL CODE (CEC).

26. IT SHALL BE THIS CONTRACTOR'S RESPONSIBILITY TO DO ALL CORING, CUTTING, PATCHING AND REFINISHING OF WALLS AND SURFACES WHEREVER IT IS NECESSARY FOR HIM TO PENETRATE FOR HIS WORK. ALL OPENINGS MADE SHALL BE SEALED TO MEET THE RATED INTEGRITY OF THE PARTICULAR WALL, FLOOR OR CEILING.

27. THE CONTRACTOR SHALL STRATEGICALLY LOCATE JUNCTION BOXES AND PULL BOXESBOXES, ETC., IN ACCESSIBLE CEILING SPACES. PROVIDE ACCESS PANELS WHERE JUNCTION/PULL BOXES ARE LOCATED IN INACCESSIBLE CEILING SPACES. COORDINATE LOCATION OF REQUIRED ACCESS PANELS PRIOR TO ROUGH-IN.

28. ALL WIRING AND ELECTRICAL EQUIPMENT INSTALLED FOR MECHANICAL AND PLUMBING EQUIPMENT SHALL BE IN ACCORDANCE WITH THESE DRAWINGS AND THE WIRING DIAGRAMS OF THE MECHANICAL AND PLUMBING DRAWINGS.

29. UNLESS SPECIFICALLY SHOWN ON THESE PLANS NO STRUCTURAL MEMBER SHALL BE CUT, DRILLED, NOR NOTCHED WITHOUT PRIOR WRITTEN AUTHORIZATION FROM THE STRUCTURAL ENGINEER AND THE DISTRICT STRUCTURAL ENGINEER FROM THE DIVISION OF THE STATE ARCHITECT.

APPLCIABLE CODES
ALL WORK SHALL BE PERFORMED IN ACCORDANCE WITH ALL APPLICABLE LAWS AND REGULATIONS, AND THE REQUIREMENTS OF THE CALIFORNIA CODE OF REGULATIONS (C.C.R.), TITLE 24, INCLUSIVE OF:
2016 CALIFORNIA ADMINISTRATIVE CODE (CAC), C.C.R. TITLE 24, PART 1
2016 CALIFORNIA BUILDING CODE (CBC), C.C.R. TITLE 24, PART 2, BASED ON 2015 INTERNATIONAL BUILDING CODE.
2016 CALIFORNIA ELECTRICAL CODE (CEC), C.C.R. TITLE 24, PART 3, BASED ON 2014 NATIONAL ELECTRICAL CODE (NEC).
2016 CALIFORNIA MECHANICAL CODE (CMC), C.C.R. TITLE 24, PART 4, BASED ON 2015 UNIFORM MECHANICAL CODE (UMC).
2016 CALIFORNIA PLUMBING CODE (CPC), C.C.R. TITLE 24, PART 5, BASED ON 2015 UNIFORM PLUMBING CODE (UPC).
2016 CALIFORNIA ENERGY CODE, C.C.R. TITLE 24, PART 6.
2016 CALIFORNIA FIRE CODE (CFC), C.C.R. TITLE 24, PART 9, BASED ON 2015 INTERNATIONAL FIRE CODE.
2016 CALIFORNIA EXISTING BUILDING CODE, C.C.R. TITLE 24, PART 10, BASED ON 2015 INTERNATIONAL EXISTING BUILDING CODE.
2016 CALIFORNIA REFERENCED STANDARDS CODE, C.C.R. TITLE 24, PART 12.

DEMOLITION NOTES

1. ALL ELECTRICAL EQUIPMENT, OUTLETS, DEVICES, ETC., THAT ARE MARKED FOR DELETION SHALL BE REMOVED COMPLETELY, INCLUDING CONDUIT AND WIRES BACK TO THE LAST REMAINING FIXTURE, OUTLET, DEVICE, SERVING PANEL, ETC.

2. WHERE EXISTING OUTLET/DEVICES TO REMAIN ARE FED BY OUTLETS BEING REMOVED BY WORK UNDER THIS CONTRACT, THE CONTRACTOR SHALL ROUTE NEW CONDUIT, WIRE, ETC., AS REQUIRED TO MAINTAIN THE SUBJECT OUTLETS IN OPERATION.

3. THE ELECTRICAL CONTRACTOR SHALL COORDINATE WITH THE OWNER PRIOR TO REMOVAL OF EXISTING ELECTRICAL/LOW VOLTAGE EQUIPMENT AND TURN OVER REMOVED EQUIPMENT THAT THE OWNER REQUESTS, IN AS-FOUND CONDITION. EQUIPMENT THAT IS TO BE TURNED OVER SHALL BE BOXED AND TAGGED TO IDENTIFY THE SPECIFIC EQUIPMENT.

4. ALL EXISTING CONDUITS WITHIN PROJECT AREA FOR LIGHTING FIXTURES, RECEPTACLES, OTHER BRANCH CIRCUITS LOADS AND COMMUNICATIONS/SIGNAL SYSTEMS, WHETHER SHOWN ON PLANS OR NOT, SHALL BE A PART OF THIS CONTRACT.

5. IN GENERAL, THE DEMOLITION PLAN SHOWS EXISTING EQUIPMENT THAT IS TO REMAIN, BE REMOVED OR REMOVED AND RELOCATED. HOWEVER, ELECTRICAL EQUIPMENT WHETHER SHOWN ON THIS DRAWING OR NOT, THAT IS LOCATED IN A REMOVED WALL OR CEILING, SHALL BE REMOVED UNLESS OTHERWISE NOTED.

6. WHERE EXISTING EQUIPMENT IS REMOVED BY WORK UNDER THIS CONTRACT, EXISTING CONDUIT FEEDS UP THROUGH THE FLOOR SHALL BE CUT OFF AND PLUGGED FLUSH WITH FLOOR AND CONDUCTORS REMOVED FROM THAT POINT BACK TO THE LAST OUTLET REMAINING IN SERVICE. WHERE THE SUBJECT CONDUIT FEEDS OUTLETS/ DEVICES REMAINING IN OPERATION THE CONTRACTOR SHALL REROUTE THE SUBJECT CONDUIT AND CONDUCTORS AS REQUIRED TO MAINTAIN OPERATION OF SUCH CIRCUITS/SYSTEMS. IT IS THE CONTRACTOR'S RESPONSIBILITY TO IDENTIFY AND DIMENSION ALL SUCH CONDUITS ON THE "RECORD" DRAWINGS.

7. WHERE EXISTING ROOF MOUNTED EQUIPMENT IS REMOVED BY WORK UNDER THIS CONTRACT, THE EXISTING CONDUIT FEEDS UP THROUGH THE ROOF SHALL BE REMOVED FROM THAT POINT BACK TO THE SERVING PANEL OR LAST EQUIPMENT REMAINING IN SERVICE. WHERE THE SUBJECT CONDUIT FEEDS EQUIPMENT REMAINING IN OPERATION THE CONTRACTOR SHALL REROUTE THE SUBJECT CONDUIT AND CONDUCTORS AS REQUIRED TO MAINTAIN OPERATION OF SUCH EQUIPMENT. THE CONTRACTOR SHALL PATCH, REPAIR AND REFINISH ALL WALL AND ROOF PENETRATIONS AFFECTED BY THE REMOVAL OF THE CONDUIT.

8. IT SHALL BE THE RESPONSIBILITY OF THIS CONTRACTOR TO MAINTAIN CONTINUITY OF ALL ELECTRICAL AND COMMUNICATION SYSTEMS, EQUIPMENT, ETC., REMAINING IN OPERATION. MAINTAINING CONTINUITY SHALL CONSIST OF RE-ROUTING CONDUIT, WIRE, ETC., AS REQUIRED TO MAINTAIN THE SUBJECT SERVICES IN OPERATION.

9. EXISTING CIRCUITS THAT ARE REMOVED AND NOT RE-USED SHALL BE IDENTIFIED ON THE PANEL SCHEDULE AS "SPARE".

10. REFER TO GENERAL NOTES, THIS SHEET, FOR ADDITIONAL REQUIREMENTS.

REFERENCES & ABBREVIATIONS

⊖	DETAIL REFERENCE
1	KEYNOTE REFERENCE
A.F.F.	ABOVE FINISH FLOOR
U.O.N.	UNLESS OTHERWISE NOTED
C.O.	CONDUIT ONLY W/PULL ROPE
WP	WEATHER PROOF
CU.	COPPER
M.L.O.	MAIN LUGS ONLY
E or (E)	EXISTING TO REMAIN

MCB	MAIN CIRCUIT BREAKER
FLA	FULL LOAD AMPS
C.	CONDUIT
V.	VOLTS
A	AMPS
GFI	GROUND FAULT INTERRUPTER
GND	GROUND
V.L.	VERIFY LOCATION
A.C.	ABOVE COUNTER
N.L.	NIGHT LIGHT

SYMBOL LIST

———	CONDUIT RUN, CONCEALED IN CEILING, WALLS OR UNDER FLOOR 3/4" MIN. IN CEILING OR WALLS, 1"C. MINIMUM FOR UNDERGROUND / UNDER FLOOR.
———●	CONDUIT TURNED DOWN.
———○	CONDUIT TURNED UP.
— — —	CONDUIT RUN UNDERGROUND. 1"C. MINIMUM. PROVIDE SIZE PER PLAN.
#10	CROSS LINES ON CONDUIT RUNS INDICATE NUMBER OF #12 WIRES CONTAINED THEREIN. TWO #12 ARE INDICATED WHEN CROSS LINES ARE NOT SHOWN. NUMERALS ADJACENT TO CROSS LINES ON CONDUIT RUNS INDICATE SIZE OF CONDUCTORS IN LIEU OF #12.
B-1,3	CONDUIT HOME RUN TO PANELBOARD. LETTER AND NUMERALS INDICATES ELECTRICAL PANEL AND CIRCUIT NUMBER.
A 3 +20'-0"	LIGHTING FIXTURE IDENTIFICATION SYMBOL. LETTER INDICATES TYPE OF FIXTURE. NUMERAL AT TOP OF HEXAGON INDICATES NUMBER OF FIXTURES REQUIRED. NUMBER AT BOTTOM OF HEXAGON INDICATES MOUNTING HEIGHT FROM FLOOR TO BOTTOM OF FIXTURE. OMMISSION OF MOUNTING HEIGHT INDICATES CEILING MOUNTING.
WP	WEATHERPROOF.
	BRANCH CIRCUIT PANEL, MOUNTING AS SHOWN ON SCHEDULES.
	MOLDED CASE CIRCUIT BREAKER (SINGLE LINE DIAGRAM).
AT	CIRCUIT BREAKER AMPERE TRIP RATING (SINGLE LINE DIAGRAM).
— E —	EXISTING CONDUIT AND CONDUCTORS TO REMAIN IN PLACE.
— R —	EXISTING CONDUIT TO BE COMPLETELY DISCONNECTED AND REMOVED.
— EN —	EXISTING CONDUIT WITH NEW CONDUCTORS.
— EX —	EXISTING CONDUIT TO BE RE-USED. CONDUCTORS TO BE DISCONNECTED AND REMOVED.
(E)	EXISTING EQUIPMENT TO REMAIN IN OPERATION.
(R)	EXISTING EQUIPMENT TO DISCONNECTED AND REMOVED.
(N)	NEW EQUIPMENT.
AS/P/AF	FUSED DISCONNECT SWITCH. HEAVY DUTY TYPE WITH REQUIRED QUANTITY OF DUAL ELEMENT TIME DELAY FUSES. NEMA 3R FOR OUTDOOR USE. AS=SWITCH AMPERE RATING. P=NUMBER OF POLES. AF=FUSE AMPERE RATING.
1	NOTE IDENTIFICATION SYMBOL.
X E4X	DETAIL IDENTIFICATION SYMBOL.
S_m	MANUAL MOTOR STARTER WITH THERMAL OVERLOAD. RATING AND NUMBER OF POLES PER THE EQUIPMENT NAMEPLATE DATA.
J C WP	JUNCTION BOX. C = CEILING MOUNTED. WP = WEATHER PROOF NEMA 3R.
	DUPLEX RECEPTACLE, FLUSH IN WALL, GROUNDING TYPE (20 AMP, 120V., WALL PLATE TO MATCH DEVICE) MTD. AT +18".
GFI	DUPLEX RECEPTACLE, WITH GROUND FAULT INTERRUPTER (20 AMP, 120V., 3W, WALL PLATE TO MATCH DEVICE) MTD. AT +18". RECEPTACLE SHALL BE PROVIDED COMPLETE WITH WEATHERPROOF COVERS U.L. LISTED FOR WET LOCATIONS WHEN IN USE.
AC 1	EQUIPMENT DESIGNATION. SEE MECHANICAL PLANS.
DD	FIRE ALARM DUCT SMOKE DETECTOR.

FIRE ALARM SYMBOL LIST

SYMBOL	MFG.	QTY	PART NO.	DESCRIPTION	BACKBOX/BASE	MNTG. HEIGHT/DETAILS	CSFM LISTING NO.
FACP	FIRE-LITE	1	MS-9600	EXISTING FIRE ALARM CONTROL PANEL A#03-108237	PROVIDED WITH PANEL	WALL	7165-0075:0217
DD	FIRE-LITE	10	D355PL(A)/DNRW	DUCT SMOKE DETECTOR	14.75"L x 5.5"W x 2.75"D	HVAC UNIT	3242-0075:0221

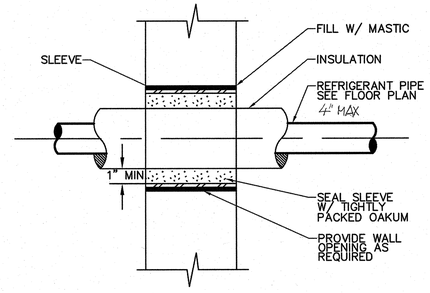

NON FIRE RATED WALL PENETRATION — SCALE: NONE — 1

ARCHITECTS
WLC
CLIENT FOCUSED • PASSION DRIVEN

SOUTHERN CALIFORNIA
8163 ROCHESTER AVENUE, SUITE 100
RANCHO CUCAMONGA
CALIFORNIA 91730-0729

TEL: 909-987-0909
www.wlcarchitects.com

LONGFELLOW ELEMENTARY SCHOOL
HVAC REPLACEMENT
COMPTON UNIFIED SCHOOL DISTRICT
1101 S DWIGHT AVE.
COMPTON, CA 90220

LICENSED ARCHITECT — RICHARD E. MARK GRAHAM — C-26046 — 03-31-19 — STATE OF CALIFORNIA
REGISTERED PROFESSIONAL ENGINEER — RICHARD E. STATEN — No. E17229 — 6/30/18 — STATE OF CALIFORNIA

CONSULTANT
A&P ENGINEERING GROUP, INC.
9320 BASELINE RD., SUITE C, RANCHO CUCAMONGA, CA 91701
TEL: (909) 941-3008 FAX: (909) 941-3021

IDENTIFICATION STAMP
DIV. OF THE STATE ARCHITECT
OFFICE OF REGULATION SERVICES
APPL 03-118423
AC — FLS — SS — EY
DATE — MAR 06 2018
FILE: 19-23

NO	DATE	BY	DESCRIPTION
1			REVISIONS

DRAWN: LS | CHECKED: RES
DATE: 3/6/2018 | SCALE: AS NOTED
PROJECT NUMBER: 1723400

GENERAL NOTES, SYMBOL LIST & DETAILS

DRAWING NUMBER: E0.1

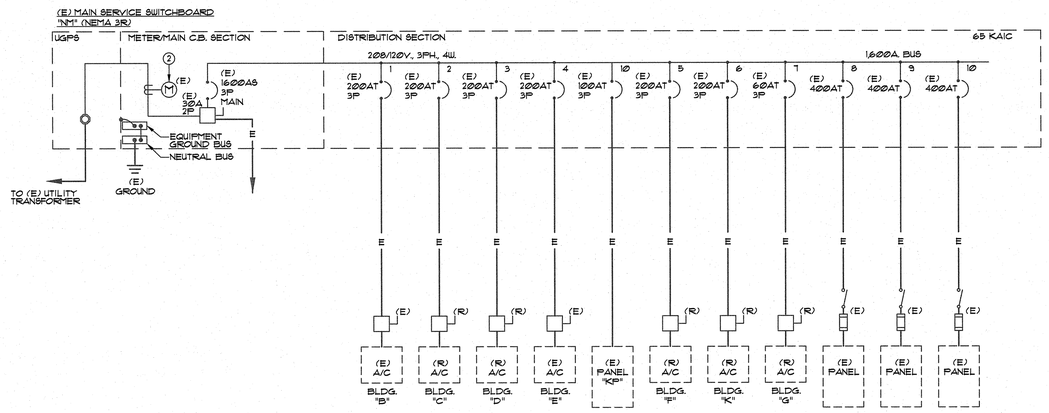

SINGLE LINE NOTES

1. REFER TO GENERAL NOTES, DRAWING E0.1, FOR ADDITIONAL REQUIREMENTS.
2. EXISTING SCE METER NUMBER 3591150-001963.

DEMOLITION SINGLE LINE DIAGRAM | NONE | 1

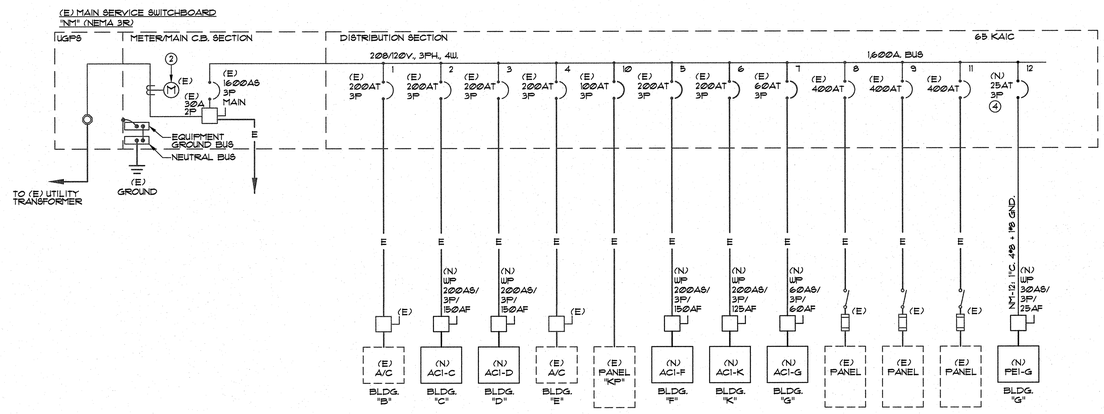

"NM" LOAD SUMMARY	
EXISTING LOAD	778.0 A.
+25% PER CEC 220-87	194.5 A.
NEW LOAD (HVAC)	42.9 A.
NEW LOAD (BUILDING PANELS)	10.43 A.
TOTAL LOAD	1,025.81 A.

* BASED ON 12 MONTHS ENERGY USAGE DATA.

HVAC EQUIPMENT LOAD SUMMARY	
REMOVED LOAD	
BUILDING "A" A/C	- 38.3 A.
BUILDING "C" A/C	- 114.0 A.
BUILDING "D" A/C	- 114.0 A.
BUILDING "F" A/C	- 114.0 A.
BUILDING "G" A/C	- 47.3 A.
BUILDING "K" A/C	- 130.2 A.
TOTAL	- 557.8 A.
ADDED LOAD	
BUILDING "A" ACI-A	+ 38.3 A.
BUILDING "C" ACI-C	+ 130.8 A.
BUILDING "D" ACI-D	+ 130.8 A.
BUILDING "F" ACI-F	+ 130.8 A.
BUILDING "G" ACI-G	+ 54.0 A.
BUILDING "K" ACI-K	+ 104.6 A.
BUILDING "G" PEI-G (POWER EXHAUST)	+ 11.38 A.
TOTAL	+600.7 A.
NET LOAD INCREASE	+ 42.9 A.

SINGLE LINE NOTES

1. REFER TO GENERAL NOTES, DRAWING E0.1, FOR ADDITIONAL REQUIREMENTS.
2. EXISTING SCE METER NUMBER 3591150-001963.
3. CONTRACTOR TO PROVIDE UPDATED NAME PLATES TO IDENTIFY THE NEW CIRCUIT BREAKERS WITHIN THE MAIN SWITCHBOARD AND DISTRIBUTION BOARD UPON COMPLETION OF REMODEL WORK.
4. NEW CIRCUIT BREAKER TO MATCH EXISTING IN MANUFACTURER, SHORT CIRCUIT RATING SHALL BE EQUAL TO OR GREATER THAN THE HIGHEST AIC RATING OF ANY EXISTING CIRCUIT BREAKER IN THE SWITCHBOARD.

REMODEL SINGLE LINE DIAGRAM | NONE | 2

ARCHITECTS
WLC
CLIENT FOCUSED • PASSION DRIVEN

SOUTHERN CALIFORNIA
8163 ROCHESTER AVENUE, SUITE 100
RANCHO CUCAMONGA
CALIFORNIA 91730-0729

TEL: 909-987-0909
www.wlcarchitects.com

LONGFELLOW ELEMENTARY SCHOOL HVAC REPLACEMENT

COMPTON UNIFIED SCHOOL DISTRICT
1101 S DWIGHT AVE.
COMPTON, CA 90220

LICENSED ARCHITECT
MARK GRAHAM
C-26046
03-31-19
STATE OF CALIFORNIA

REGISTERED PROFESSIONAL ENGINEER
RICHARD E. SOTO
No. E17229
6/30/18
STATE OF CALIFORNIA

CONSULTANT
A&F ENGINEERING GROUP, INC.
9320 BASELINE RD., SUITE C, RANCHO CUCAMONGA, CA 91701
TEL. (909) 941-3008 FAX. (909) 941-8211

IDENTIFICATION STAMP
DIV. OF THE STATE ARCHITECT
OFFICE OF REGULATION SERVICES
APPL 03-118423
FILE: 19-23
AC — FLS — SS EY
DATE MAR 6 2018

NO	DATE	BY	DESCRIPTION
			REVISIONS

DRAWN: LS | CHECKED: RES
DATE: 3/6/2018 | SCALE: AS NOTED
PROJECT NUMBER: 1723400

DEMOLITION AND REMODEL SINGLE LINE DIAGRAM

DRAWING NUMBER: E-0.2

PANEL "AA"

VOLTAGE: 240/120V-3-WIRE | LOCATION: BUILDING "A" | MAIN BREAKER: 225A. | BUS SIZE COPPER: 225A. | SCA: 10 KAIC | MOUNT: SURFACE | ENTRY: BOTTOM

	DESCRIPTION	CKT	BKR	P	LTS	REC	MSC	MTR	A-VA	B-VA	AMPS
*	EXISTING LOAD	1	20	1							
	EXISTING LOAD	3a	20	1							
	COPY MACHINE	3b	20	1							
	MASTER CLOCK BELLS	5	20	1							
	EXISTING LOAD	7	20	1							
	EXISTING LOAD	9	20	1							
	LOUNGE LTS	11	20	1							
	REFRIG	13a	20	1							
	COPY MACHINE	13b	20	1							
	OUTSIDE VENDING	15a	20	1							
	OUTSIDE VENDING	15b	20	1							
								SUB TOTAL VOLT/AMPS:		0	0
*	EXISTING LOAD	2	20	1							
	MASTER CLOCK	4	20	1							
	OUTLETS, TIME CLOCK	6	20	1							
	DATA	8	30	1							
	EXISTING LOAD	10a	20	1							
	EXISTING LOAD	10b	20	1							
	SODA MACHINE	12a	20	1							
	SODA MACHINE	12b	20	1							
Δ	ACT-A	14a	50	2							
Δ	W/CKT. 14a	14b	—	—							
*	EXISTING LOAD	16a	20	1							
*	EXISTING LOAD	16b	20	1							
								SUB TOTAL VOLT/AMPS:		0	0

CONNECTED: 0 VA | TOTAL VOLT/AMPS: 0 | 0
25% OF MTR: VA | TOTAL AMPS/PHASE: 0 | 0
25% OF LCL: 0 VA
CALCULATED: 0 VA = 0.00 AMPS 0.00 ACTUAL AMPS

* = INDICATES EXISTING LOAD TO REMAIN.
Δ = INDICATES NEW LOAD ON EXISTING CIRCUIT BREAKER. NEW AC UNIT IS ONE FOR ONE REPLACEMENT. NO INCREASED LOAD.

PANEL "C"

VOLTAGE: 240/120V-3-WIRE | LOCATION: BUILDING "F" | MAIN BREAKER: 225A. | BUS SIZE COPPER: 225A. | SCA: 10 KAIC | MOUNT: SURFACE | ENTRY: BOTTOM

	DESCRIPTION	CKT	BKR	P	LTS	REC	MSC	MTR	A-VA	B-VA	AMPS
*	OUTSIDE LTS	1	20	1							
*	BATHROOM LTS	3	20	1							
	SPARE	5	20	1							
	SPARE	7	20	1							
*	RM 20 LTS	9	20	1							
	RM 20 LTS	11	20	1							
	RM 20 PLUGS	13	20	1							
	RM 19 LTS	15	20	1							
	SPARE	17	20	1							
	SPARE	19	20	1							
	SPARE	21	20	1							
	SPARE	23	20	1							
	SPARE	25	20	1							
	SPARE	27	20	1							
	SPARE	29	20	1							
□	VAV1-F THRU VAV6-F	31	20	1				6		300	
	SPACE	33									
	SPACE	35									
	SPACE	37									
	SPACE	39									
	SPACE	41									
								SUB TOTAL VOLT/AMPS:		0	300
*	RM 18 LTS	2	20	1							
	RM 18 LTS	4	20	1							
	RM 18 LTS	6	20	1							
	RM 20 PLUGS	8	20	1							
	SPARE	10	20	1							
	RM 18 PLUGS	12	20	1							
	RM 18 & 19 PLUGS	14	20	1							
	RM 18 PLUGS	16	20	1							
	RM 19 PLUGS	18	20	1							
	RM 19 PLUGS	20	20	1							
	SPARE	22	20	1							
	SPARE	24	20	1							
	SPARE	26	20	1							
	SPARE	28	20	1							
	SPARE	30	20	1							
	SPACE	32									
	SPACE	34									
	SPACE	36									
	SPACE	38									
	SPACE	40									
	SPACE	42									
								SUB TOTAL VOLT/AMPS:		0	0

CONNECTED: 300 VA | TOTAL VOLT/AMPS: 0 | 300
25% OF MTR: VA | TOTAL AMPS/PHASE: 0 | 3
25% OF LCL: 0 VA
CALCULATED: 300 VA = 1.25 AMPS 1.25 ACTUAL AMPS

* = INDICATES EXISTING LOAD TO REMAIN.
□ = INDICATES NEW LOAD AND NEW CIRCUIT BREAKER AT EXISTING SPACE. NEW CIRCUIT BREAKER SHALL MATCH THE HIGHEST EXISTING AIC RATED CIRCUIT BREAKER WITHIN THIS PANEL. NEW CIRCUIT BREAKER TO MATCH EXISTING CIRCUIT BREAKERS IN MANUFACTURER.

PANEL "F2"

VOLTAGE: 240/120V-3-WIRE | LOCATION: BUILDING "D" | MAIN BREAKER: 225A. | BUS SIZE COPPER: 225A. | SCA: 10 KAIC | MOUNT: SURFACE | ENTRY: BOTTOM

	DESCRIPTION	CKT	BKR	P	LTS	REC	MSC	MTR	A-VA	B-VA	AMPS
*	EXISTING LOAD	1	20	1							
	EXISTING LOAD	3	20	1							
	EXISTING LOAD	5	20	1							
	EXISTING LOAD	7	20	1							
	EXISTING LOAD	9	20	1							
	EXISTING LOAD	11	20	1							
	EXISTING LOAD	13	20	1							
	EXISTING LOAD	15	20	1							
□	VAV1-D THRU VAV6-D	17	20	1				6		300	
	SPACE	19									
	SPACE	21									
	SPACE	23									
	SPACE	25									
	SPACE	27									
	SPACE	29									
	SPACE	31									
	SPACE	33									
	SPACE	35									
	SPACE	37									
	SPACE	39									
	SPACE	41									
								SUB TOTAL VOLT/AMPS:		300	0
*	EXISTING LOAD	2	20	1							
	EXISTING LOAD	4	20	1							
	EXISTING LOAD	6	20	1							
	EXISTING LOAD	8	20	1							
	EXISTING LOAD	10	20	1							
	EXISTING LOAD	12	20	1							
	EXISTING LOAD	14	20	1							
	SPACE	16									
	SPACE	18									
	SPACE	20									
	SPACE	22									
	SPACE	24									
	SPACE	26									
	SPACE	28									
	SPACE	30									
	SPACE	32									
	SPACE	34									
	SPACE	36									
	SPACE	38									
	SPACE	40									
	SPACE	42									
								SUB TOTAL VOLT/AMPS:		0	0

CONNECTED: 300 VA | TOTAL VOLT/AMPS: 300 | 0
25% OF MTR: VA | TOTAL AMPS/PHASE: 3 | 0
25% OF LCL: 0 VA
CALCULATED: 300 VA = 1.25 AMPS 1.25 ACTUAL AMPS

* = INDICATES EXISTING LOAD TO REMAIN.
□ = INDICATES NEW LOAD AND NEW CIRCUIT BREAKER AT EXISTING SPACE. NEW CIRCUIT BREAKER SHALL MATCH THE HIGHEST EXISTING AIC RATED CIRCUIT BREAKER WITHIN THIS PANEL. NEW CIRCUIT BREAKER TO MATCH EXISTING CIRCUIT BREAKERS IN MANUFACTURER.

PANEL "D"

VOLTAGE: 240/120V-3-WIRE | LOCATION: BUILDING "G" | MAIN BREAKER: 225A. | BUS SIZE COPPER: 225A. | SCA: 10 KAIC | MOUNT: SURFACE | ENTRY: BOTTOM

	DESCRIPTION	CKT	BKR	P	LTS	REC	MSC	MTR	A-VA	B-VA	AMPS
□	VAV1-G THRU VAV3-G	1	20	1			3		150		
	SPARE	3	20	1							
	SPARE	5	20	1							
	SPARE	7	20	1							
	SPARE	9	20	1							
	SPARE	11	20	1							
	SPARE	13	20	1							
	SPARE	15	20	1							
	SPARE	17	20	1							
	SPARE	19	20	1							
	SPARE	21	20	1							
	SPARE	23	20	1							
	SPARE	25	20	1							
	SPARE	27	20	1							
	SPARE	29	20	1							
	SPARE	31	20	1							
	SPARE	33	20	1							
	SPARE	35	20	1							
	SPARE	37	20	1							
	SPARE	39	20	1							
	SPARE	41	20	1							
								SUB TOTAL VOLT/AMPS:		150	0
*	RM	2	20	1							
	PLUG	4	20	1							
	PLUG	6	20	1							
	RM 25 LTS	8	20	1							
	PARENT RM PLUGS	10	20	1							
	PARENT RM LTS	12	20	1							
	RM 25 PLUGS	14	20	1							
	RM 25 PLUGS	16	20	1							
	EXISTING LOAD	18	20	1							
	EXISTING LOAD	20	20	1							
	EXISTING LOAD	22	20	1							
	EXISTING LOAD	24	20	1							
	EXISTING LOAD	26	20	1							
	EXISTING LOAD	28	20	1							
	EXISTING LOAD	30	20	1							
	EXISTING LOAD	32	20	1							
	EXISTING LOAD	34	20	1							
	EXISTING LOAD	36	20	1							
	EXISTING LOAD	38	20	1							
	EXISTING LOAD	40	20	1							
	EXISTING LOAD	42	20	1							
								SUB TOTAL VOLT/AMPS:		0	0

CONNECTED: 150 VA | TOTAL VOLT/AMPS: 150 | 0
25% OF MTR: VA | TOTAL AMPS/PHASE: 1 | 0
25% OF LCL: 0 VA
CALCULATED: 150 VA = 0.63 AMPS 0.63 ACTUAL AMPS

* = INDICATES EXISTING LOAD TO REMAIN.
□ = INDICATES NEW LOAD AND NEW CIRCUIT BREAKER AT EXISTING SPACE. NEW CIRCUIT BREAKER SHALL MATCH THE HIGHEST EXISTING AIC RATED CIRCUIT BREAKER WITHIN THIS PANEL. NEW CIRCUIT BREAKER TO MATCH EXISTING CIRCUIT BREAKERS IN MANUFACTURER.

PANEL "E2"

VOLTAGE: 240/120V-3-WIRE | LOCATION: BUILDING "C" | MAIN BREAKER: 225A. | BUS SIZE COPPER: 225A. | SCA: 10 KAIC | MOUNT: SURFACE | ENTRY: BOTTOM

	DESCRIPTION	CKT	BKR	P	LTS	REC	MSC	MTR	A-VA	B-VA	AMPS
*	OUTSIDE LTS	1	20	1							
	OUTSIDE LTS	3	20	1							
	RM 3 RECEPT	5	20	1							
	RM 1 RECEPT	7	20	1							
	STORAGE RM RECEPT	9	20	1							
	SPACE	11									
	SPACE	13									
	SPACE	15									
	SPACE	17									
	SPACE	19									
	SPACE	21									
	SPACE	23									
	SPACE	25									
	SPACE	27									
	SPACE	29									
	SPACE	31									
	SPACE	33									
	SPACE	35									
	SPACE	37									
□	VAV1-C THRU VAV6-C	39	20	1			6			300	
	SPACE	41									
								SUB TOTAL VOLT/AMPS:		0	300
*	RM 2 LTS	2	20	1							
	RM 2 RECEPT	4	20	1							
	RM 1 LTS	6	20	1							
	RM 2 RECEPT	8	20	1							
	RM 3 LTS	10	20	1							
	RM 2	12	20	1							
	RM 2	14	20	1							
	RESTROOM & STORAGE LTS	16	20	1							
	SPACE	18									
	SPACE	20									
	SPACE	22									
	SPACE	24									
	SPACE	26									
	SPACE	28									
	SPACE	30									
	SPACE	32									
	SPACE	34									
	SPACE	36									
	SPACE	38									
	SPACE	40									
	SPACE	42									
								SUB TOTAL VOLT/AMPS:		0	0

CONNECTED: 300 VA | TOTAL VOLT/AMPS: 0 | 300
25% OF MTR: VA | TOTAL AMPS/PHASE: 0 | 3
25% OF LCL: 0 VA
CALCULATED: 300 VA = 1.25 AMPS 1.25 ACTUAL AMPS

* = INDICATES EXISTING LOAD TO REMAIN.
□ = INDICATES NEW LOAD AND NEW CIRCUIT BREAKER AT EXISTING SPACE. NEW CIRCUIT BREAKER SHALL MATCH THE HIGHEST EXISTING AIC RATED CIRCUIT BREAKER WITHIN THIS PANEL. NEW CIRCUIT BREAKER TO MATCH EXISTING CIRCUIT BREAKERS IN MANUFACTURER.

PANEL "G"

VOLTAGE: 240/120V-3-WIRE | LOCATION: BUILDING "K" | MAIN BREAKER: 225A. | BUS SIZE COPPER: 225A. | SCA: 10 KAIC | MOUNT: SURFACE | ENTRY: BOTTOM

	DESCRIPTION	CKT	BKR	P	LTS	REC	MSC	MTR	A-VA	B-VA	AMPS
*	EXISTING LOAD	1	20	1							
	EXISTING LOAD	3	20	1							
	EXISTING LOAD	5	20	1							
	EXISTING LOAD	7	20	1							
	EXISTING LOAD	9	20	1							
	EXISTING LOAD	11	20	1							
	EXISTING LOAD	13	20	1							
	EXISTING LOAD	15	20	1							
	EXISTING LOAD	17	20	1							
	EXISTING LOAD	19	20	1							
	EXISTING LOAD	21	20	1							
	FIRE ALARM	23	20	1							
	EXISTING LOAD	25	20	1							
	EXISTING LOAD	27	20	1							
	EXISTING LOAD	29	20	1							
	EXISTING LOAD	31	20	1							
	EXISTING LOAD	33	20	1							
	EXISTING LOAD	35	20	1							
	EXISTING LOAD	37	20	1							
	EXISTING LOAD	39	20	1							
	EXISTING LOAD	41	20	1							
								SUB TOTAL VOLT/AMPS:		0	0
*	EXISTING LOAD	2	20	1							
	EXISTING LOAD	4	20	1							
	EXISTING LOAD	6	20	1							
	EXISTING LOAD	8	20	1							
	EXISTING LOAD	10	20	1							
	EXISTING LOAD	12	20	1							
	EXISTING LOAD	14	20	1							
	EXISTING LOAD	16	20	1							
	EXISTING LOAD	18	20	1							
○	VAV1-K THRU VAV3-K	20	20	1			3			150	
*	EXISTING LOAD	22	20	1							
	EXISTING LOAD	24	20	1							
	EXISTING LOAD	26	20	1							
	EXISTING LOAD	28	20	1							
	EXISTING LOAD	30	20	1							
	EXISTING LOAD	32	20	1							
	EXISTING LOAD	34	20	1							
	EXISTING LOAD	36	20	1							
	EXISTING LOAD	38	20	1							
	EXISTING LOAD	40	20	1							
	EXISTING LOAD	42	20	1							
								SUB TOTAL VOLT/AMPS:		0	150

CONNECTED: 150 VA | TOTAL VOLT/AMPS: 0 | 150
25% OF MTR: VA | TOTAL AMPS/PHASE: 0 | 1
25% OF LCL: 0 VA
CALCULATED: 150 VA = 0.63 AMPS 0.63 ACTUAL AMPS

* = INDICATES EXISTING LOAD TO REMAIN.
○ = INDICATES NEW LOAD ON EXISTING SPARE CIRCUIT BREAKER. CONTRACTOR TO VERIFY THIS BREAKER IS SPARE PRIOR TO BEGINNING WORK AND NOTIFY THE ENGINEER OF RECORD IF NOT SPARE.

PANEL "G2"

VOLTAGE: 240/120V-3-WIRE | LOCATION: BUILDING "E" | MAIN BREAKER: 225A. | BUS SIZE COPPER: 225A. | SCA: 10 KAIC | MOUNT: SURFACE | ENTRY: BOTTOM

	DESCRIPTION	CKT	BKR	P	LTS	REC	MSC	MTR	A-VA	B-VA	AMPS
*	RM 14 LTS	1	20	1							
	SPARE	3	20	1							
	RM 14 PLUGS	5	20	1							
	OUTSIDE LTS	7	20	1							
	OUTSIDE LTS	9	20	1							
	OUTSIDE LTS	11	20	1							
	SPARE	13	20	1							
	SPARE	15	20	1							
	SPARE	17	20	1							
	SPARE	19	20	1							
	SPARE	21	20	1							
	SPARE	23	20	1							
	SPARE	25	20	1							
□	ZD1-E THRU ZD5-E & BP1	27	20	1				6		300	
□	ZONE DAMPER CONTROLLER	29	20	1				1	500		
□	BY PASS CONTROLLER	31	20	1				1		500	
	SPACE	33									
	SPACE	35									
	SPACE	37									
	SPACE	39									
	SPACE	41									
								SUB TOTAL VOLT/AMPS:		500	800
*	RM 13 LTS	2	20	1							
	RM 13 PLUGS	4	20	1							
	RM 14 PLUGS	6	20	1							
	RECEPTS	8	20	1							
	RM 14 LTS	10	20	1							
	RM 13 RECEPT	12	20	1							
	RM 13 RECEPT	14	20	1							
	FL OUTLET	16	20	1							
	FL OUTLET	18	20	1							
	FL OUTLET	20	20	1							
	FL OUTLET	22	20	1							
	SPARE	24	20	1							
	SPARE	26	20	1							
	SPARE	28	20	1							
	SPACE	30									
	SPACE	32									
	SPACE	34									
	SPACE	36									
	SPACE	38									
	SPACE	40									
	SPACE	42									
								SUB TOTAL VOLT/AMPS:		0	0

CONNECTED: 1300 VA | TOTAL VOLT/AMPS: 500 | 800
25% OF MTR: VA | TOTAL AMPS/PHASE: 4 | 7
25% OF LCL: 0 VA
CALCULATED: 1300 VA = 5.42 AMPS 5.42 ACTUAL AMPS

* = INDICATES EXISTING LOAD TO REMAIN.
□ = INDICATES NEW LOAD AND NEW CIRCUIT BREAKER AT EXISTING SPACE. NEW CIRCUIT BREAKER SHALL MATCH THE HIGHEST EXISTING AIC RATED CIRCUIT BREAKER WITHIN THIS PANEL. NEW CIRCUIT BREAKER TO MATCH EXISTING CIRCUIT BREAKERS IN MANUFACTURER.

ARCHITECTS
WLC
CLIENT FOCUSED • PASSION DRIVEN

SOUTHERN CALIFORNIA
8163 ROCHESTER AVENUE, SUITE 100
RANCHO CUCAMONGA
CALIFORNIA 91730-0729

TEL: 909-987-0909
www.wlcarchitects.com

LONGFELLOW ELEMENTARY SCHOOL
HVAC REPLACEMENT
COMPTON UNIFIED SCHOOL DISTRICT
1101 S DWIGHT AVE.
COMPTON, CA 90220

LICENSED ARCHITECT — MARK GRAHAM C-20046 03-31-19 — STATE OF CALIFORNIA

REGISTERED PROFESSIONAL ENGINEER — RICARDO E. STEED No. 517229 6/30/18 — STATE OF CALIFORNIA

CONSULTANT

A&F ENGINEERING GROUP, INC.
9320 BASELINE RD., SUITE C, RANCHO CUCAMONGA, CA 91701
TEL. (909) 941-3008 FAX (909) 941-0211

DSA IDENTIFICATION STAMP
DIV. OF THE STATE ARCHITECT
OFFICE OF REGULATION SERVICES
APPL 03-118423
AC — FLS — SS — EY
DATE MAR 06 2018
FILE: 19-23

NO	DATE	BY	DESCRIPTION
			REVISIONS

DRAWN: LS | CHECKED: RES
DATE: 3/6/2018 | SCALE: AS NOTED
PROJECT NUMBER: 1723400

PANEL SCHEDULES

DRAWING NUMBER: E-0.3

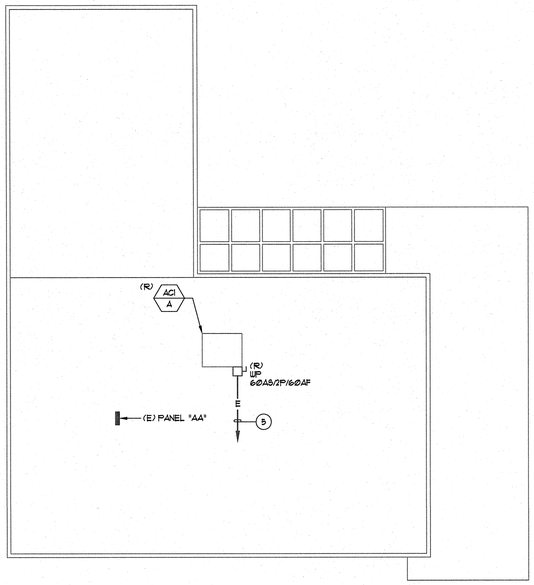

NORTH

BUILDING A - DEMOLITION ROOF PLAN | 1/8" = 1'-0" | 1

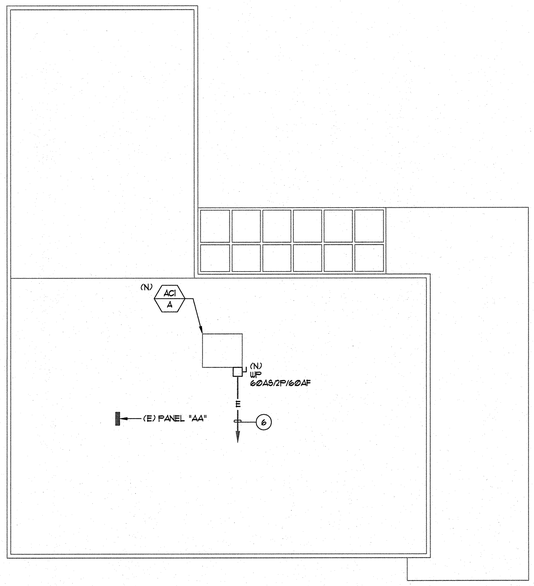

NORTH

BUILDING A - REMODEL ROOF PLAN | 1/8" = 1'-0" | 2

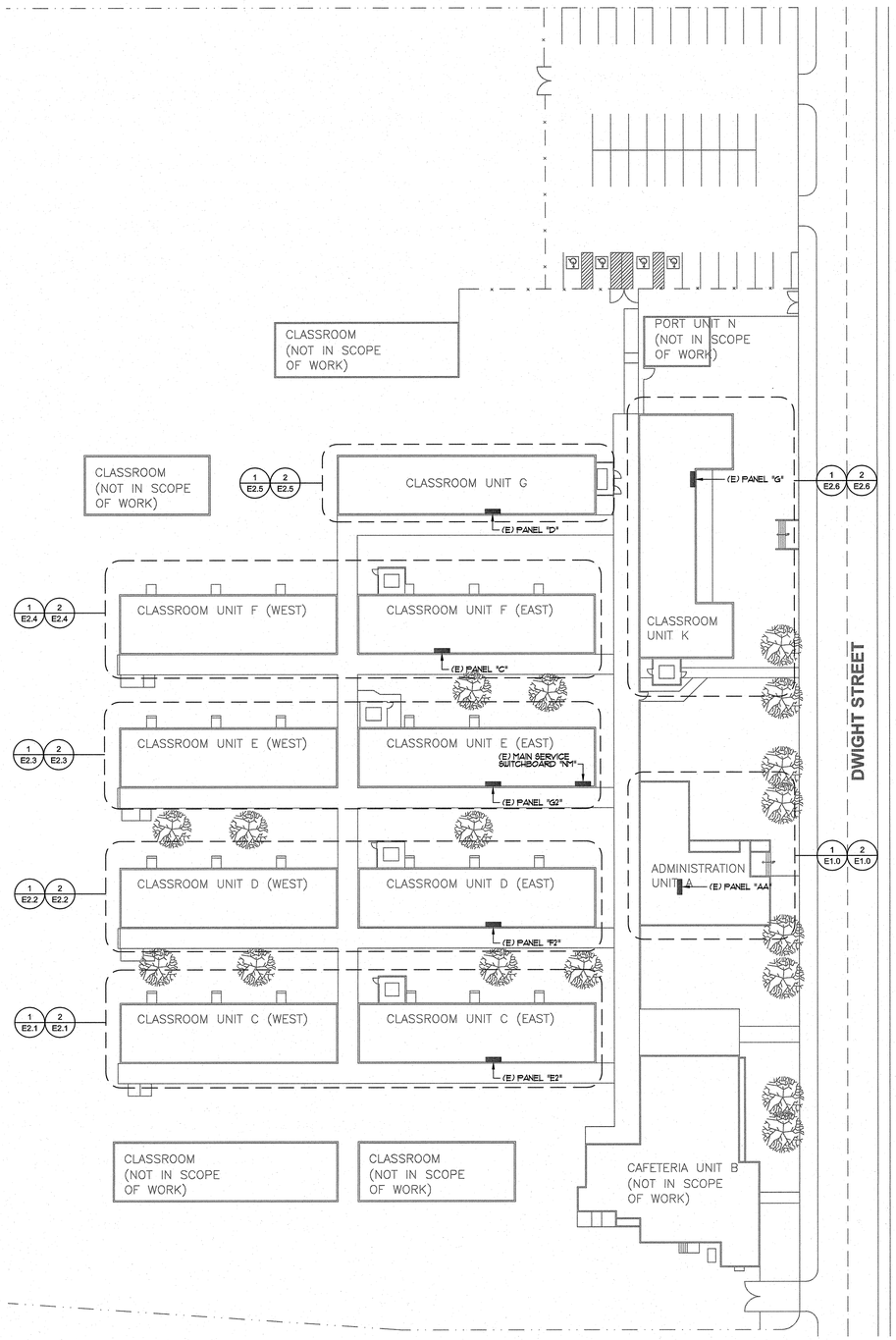

NORTH

SITE PLAN | 1" = 30'-0" | 3

PLAN NOTES:

1. REFER TO GENERAL NOTES AND DEMOLITION NOTES, DRAWING E-Ø1, FOR ADDITIONAL REQUIREMENTS.
2. IT SHALL BE THIS CONTRACTOR'S RESPONSIBILITY TO MAINTAIN REQUIRED CLEARANCES BETWEEN UNDERGROUND ELECTRICAL CONDUITS AND FOOTINGS. CONDUIT STUB-UPS SHALL NOT BE INSTALLED IN FOOTINGS, EXACT METHOD FOR STUBBING-UP CONDUITS AT FOOTING LOCATIONS SHALL BE COORDINATED IN THE FIELD WITH THE GENERAL CONTRACTOR AND THE ARCHITECT.
3. REFER TO SINGLE LINE DIAGRAM, DRAWING E-Ø2, FOR ADDITIONAL REQUIREMENTS.
4. THE CONTRACTOR SHALL NOTE THE DRAWINGS ARE DIAGRAMMATIC. EXACT ROUTING OF NEW CONDUITS AND LOCATION OF JUNCTION BOXES AND PULL BOXES SHALL BE COORDINATED AND DETERMINED IN THE FIELD. NEW CONDUIT, JUNCTION BOXES AND PULL BOXES SHALL BE ROUTED CONCEALED IN THE CEILING SPACE BELOW AND IN SUCH A MANNER AS TO AVOID INTERFERENCE WITH EXISTING BUILDING STRUCTURES, UTILITIES AND THE WORK BEING PERFORMED BY OTHER TRADES. NEW CONDUIT, JUNCTION AND PULL BOXES WILL NOT BE ALLOWED TO BE INSTALLED EXPOSED ON THE ROOF.
5. CONTRACTOR TO REMOVE AC UNIT AND DISCONNECT SWITCH ONLY. EXISTING CONDUIT AND CONDUCTORS TO BE USED TO ENERGIZE THE NEW ENERGY EFFICIENT AC UNIT. NO NEW LOAD INCREASE. REFER TO REMODEL PLAN FOR ADDITIONAL REQUIREMENTS.
6. CONTRACTOR TO CONNECT NEW AC UNIT TO THE EXISTING CONDUCTORS PREVIOUSLY FEEDING THE REMOVED AC UNIT. CONTRACTOR TO PROVIDE AND EXTEND NEW CONDUIT / CONDUCTORS AS REQUIRED TO ENSURE A FULLY OPERABLE AC UNIT UPON COMPLETION OF INSTALLATION.

WLC ARCHITECTS
CLIENT FOCUSED • PASSION DRIVEN

SOUTHERN CALIFORNIA
8163 ROCHESTER AVENUE, SUITE 100
RANCHO CUCAMONGA
CALIFORNIA 91730-0729
TEL: 909-987-0909
www.wlcarchitects.com

LONGFELLOW ELEMENTARY SCHOOL
HVAC REPLACEMENT
COMPTON UNIFIED SCHOOL DISTRICT
1101 S DWIGHT AVE.
COMPTON, CA 90220

LICENSED ARCHITECT MARK GRAHAM C-26046 03-31-19 STATE OF CALIFORNIA

REGISTERED PROFESSIONAL ENGINEER RICHARD E. STOTZER No. E17229 6/30/18 STATE OF CALIFORNIA

CONSULTANT
A&F ENGINEERING GROUP, INC.
9320 BASELINE RD., SUITE C, RANCHO CUCAMONGA, CA 91701
TEL. (909) 941-3008 FAX (909) 941-3211

IDENTIFICATION STAMP
DIV. OF THE STATE ARCHITECT
OFFICE OF REGULATION SERVICES
APPL 03-118423
FILE: 19-23
AC — FLS — SS EY
DATE MAR 0 6 2018

NO	DATE	BY	DESCRIPTION
			REVISIONS

DRAWN: LS	CHECKED: RES
DATE: 3/6/2018	SCALE: AS NOTED
PROJECT NUMBER: 1723400	

SITE PLAN

DRAWING NUMBER: E1.0

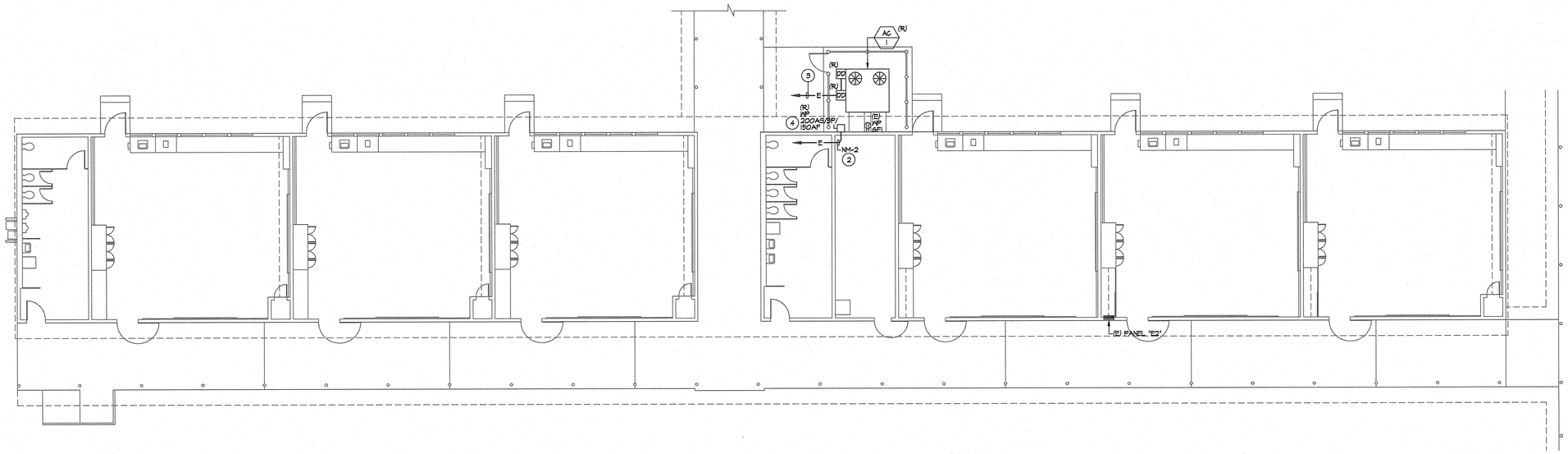

DEMOLITION NOTES:

1. REFER TO GENERAL NOTES AND DEMOLITION NOTES, DRAWING E.01, FOR ADDITIONAL REQUIREMENTS.
2. CONTRACTOR TO REMOVE AC UNIT AND DISCONNECT SWITCH ONLY. EXISTING CONDUIT AND CONDUCTORS TO BE USED TO ENERGIZE THE NEW AC UNIT. NO NEW LOAD INCREASE. REFER TO REMODEL PLAN FOR ADDITIONAL REQUIREMENTS.
3. CONTRACTOR TO REMOVE DUCT DETECTORS ONLY. EXISTING CONDUIT AND CONDUCTORS TO BE USED TO ENERGIZE THE NEW DUCT DETECTORS. REFER TO REMODEL PLAN FOR ADDITIONAL REQUIREMENTS.
4. CONTRACTOR TO REMOVE AC UNIT AND DISCONNECT SWITCH ONLY. HE SHALL PROVIDE A NEW 12"X12"X6" NEMA 3R PULL BOX IN ITS PLACE TO EXTEND NEW CONDUIT AND CONDUCTORS TO THE NEW DISCONNECT SWITCH LOCATION. REFER TO REMODEL PLAN FOR ADDITIONAL REQUIREMENTS.

NORTH

BUILDING C - DEMOLITION POWER PLAN | 1/8" = 1'-0" | 1

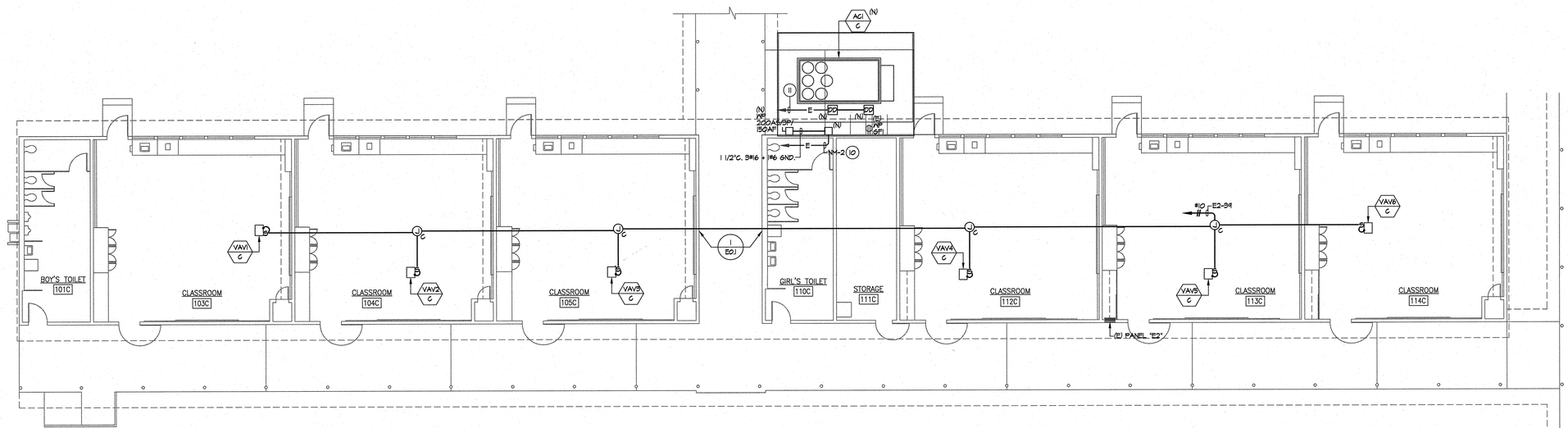

REMODEL NOTES:

1. REFER TO GENERAL NOTES AND DEMOLITION NOTES, DRAWING E.01, FOR ADDITIONAL REQUIREMENTS.
2. CONTRACTOR TO UPDATE PANEL DIRECTORY FOR ALL REMOVED AND ADDED HVAC EQUIPMENT.
3. THE CONTRACTOR SHALL NOTE THAT THE DRAWING IS DIAGRAMMATIC. EXACT ROUTING OF NEW CONDUITS AND LOCATION OF JUNCTION BOXES AND PULL BOXES SHALL BE COORDINATED AND DETERMINED IN THE FIELD. NEW CONDUIT, JUNCTION BOXES AND PULL BOXES SHALL BE ROUTED / PLACED IN SUCH A MANNER AS TO ADHERE TO ALL APPLICABLE CODES AND TO AVOID INTERFERENCE WITH EXISTING BUILDING STRUCTURES, UTILITIES AND THE WORK BEING PERFORMED BY OTHER TRADES. ALL EXTERIOR CONDUIT, FITTINGS, JUNCTION BOXES AND PULL BOXES TO BE WEATHER PROOF TYPE: NEMA 3R.
4. EXTERIOR MOUNTED DEVICES SHALL BE PROVIDED COMPLETE WITH WEATHERPROOF COVERS UL. LISTED FOR WET LOCATIONS WHEN IN USE. PLASTIC COVERS NOT ALLOWED.
5. CIRCUITS INDICATED ON THE PANEL SCHEDULES, WHETHER SHOWN ON THE DRAWING OR NOT, SHALL BE A PART OF THIS CONTRACT AND THE RESPONSIBILITY OF THE CONTRACTOR TO PROVIDE REQUIRED CONDUIT AND WIRE AS REQUIRED TO MEET THE INTENT OF THE PLANS AND SPECIFICATIONS.
6. SEE SINGLE LINE DIAGRAM, DRAWING E.02 FOR CONDUIT SIZE AND WIRE SIZE AND QUANTITIES REQUIRED FOR ALL ELECTRICAL EQUIPMENT.
7. THE CONTRACTOR SHALL PROVIDE AN UPDATED TYPED PANEL DIRECTORY FOR ALL PANELS WITHIN SCOPE OF WORK UPON COMPLETION OF WORK. HAND WRITTEN DIRECTORY NOT ALLOWED.
8. THE CONTRACTOR SHALL REFER TO THE MECHANICAL AND PLUMBING DRAWINGS FOR EXACT EQUIPMENT LOCATIONS AND ELECTRICAL CONNECTIONS REQUIREMENTS. CONTRACTOR SHALL PROVIDE ALL POWER AND CONTROL CONNECTIONS AS INDICATED ON THE MECHANICAL AND PLUMBING DRAWINGS.
9. ALL CIRCUITS SERVING THE REMODEL AREA, WHETHER IDENTIFIED ON PLAN OR NOT, SHALL BE TRACED AND IDENTIFIED PRIOR TO START OF THE DEMOLITION PHASE. CIRCUITS AFFECTED BY THE REMODEL THAT SERVE AREAS OF THE BUILDING THAT ARE NOT A PART OF THE REMODEL SHALL BE MAINTAINED IN OPERATION DURING THE CONSTRUCTION PHASE. INTERRUPTION OF SERVICE WILL NOT BE ALLOWED.
10. CONTRACTOR TO CONNECT NEW AC UNIT TO THE EXISTING CONDUCTORS PREVIOUSLY FEEDING THE REMOVED AC UNIT. CONTRACTOR TO PROVIDE AND EXTEND NEW CONDUIT / CONDUCTORS FROM THE NEW PULL BOX AS REQUIRED TO ENSURE A FULLY OPERABLE AC UNIT UPON COMPLETION OF INSTALLATION.
11. CONTRACTOR TO CONNECT NEW DUCT DETECTORS TO THE EXISTING CONDUIT

NORTH

BUILDING C - REMODEL POWER PLAN | 1/8" = 1'-0" | 2

ARCHITECTS
WLC
CLIENT FOCUSED • PASSION DRIVEN

SOUTHERN CALIFORNIA
8163 ROCHESTER AVENUE, SUITE 100
RANCHO CUCAMONGA
CALIFORNIA 91730-0729
TEL: 909-987-0909
www.wlcarchitects.com

LONGFELLOW ELEMENTARY SCHOOL
HVAC REPLACEMENT
COMPTON UNIFIED SCHOOL DISTRICT
1101 S DWIGHT AVE.
COMPTON, CA 90220

LICENSED ARCHITECT — MARK GRAHAM C-28046 03-31-19 — STATE OF CALIFORNIA
REGISTERED PROFESSIONAL ENGINEER — RICARDO E. SOTO No. E17229 6/30/18 — STATE OF CALIFORNIA

CONSULTANT
A&F ENGINEERING GROUP, INC.
9320 BASELINE RD., SUITE C, RANCHO CUCAMONGA, CA 91701
TEL. (909) 941-3006 FAX (909) 941-3211

IDENTIFICATION STAMP
DIV. OF THE STATE ARCHITECT
OFFICE OF REGULATION SERVICES
APPL 03-118423
AC FLS SS FY
DATE OCT 02 2018
FILE: 19-23

NO	DATE	BY	DESCRIPTION
			REVISIONS

DRAWN: LS	CHECKED: RES
DATE: 3/6/2018	SCALE: AS NOTED
PROJECT NUMBER: 1723400	

BUILDING C
DEMOLITION AND
REMODEL PLANS

DRAWING NUMBER: E2.1

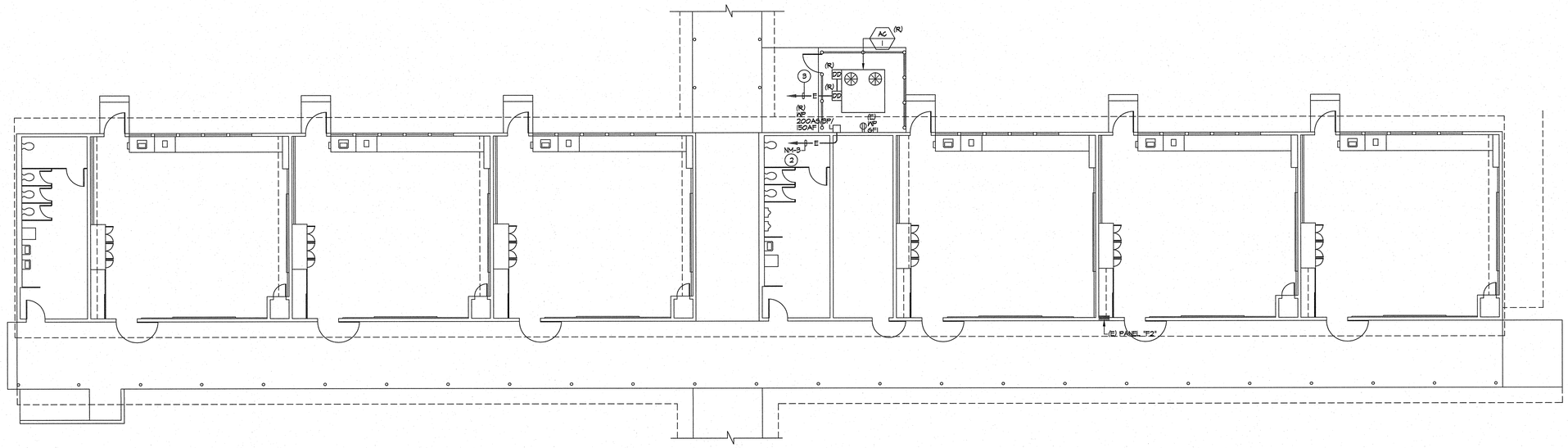

DEMOLITION NOTES:

1. REFER TO GENERAL NOTES AND DEMOLITION NOTES, DRAWING E.01, FOR ADDITIONAL REQUIREMENTS.
2. CONTRACTOR TO REMOVE AC UNIT AND DISCONNECT SWITCH ONLY. EXISTING CONDUIT AND CONDUCTORS TO BE USED TO ENERGIZE THE NEW AC UNIT. NO NEW LOAD INCREASE. REFER TO REMODEL PLAN FOR ADDITIONAL REQUIREMENTS.
3. CONTRACTOR TO REMOVE DUCT DETECTORS ONLY. EXISTING CONDUIT AND CONDUCTORS TO BE USED TO ENERGIZE THE NEW DUCT DETECTORS. REFER TO REMODEL PLAN FOR ADDITIONAL REQUIREMENTS.

NORTH

BUILDING D - DEMOLITION POWER PLAN — 1/8" = 1'-0" — 1

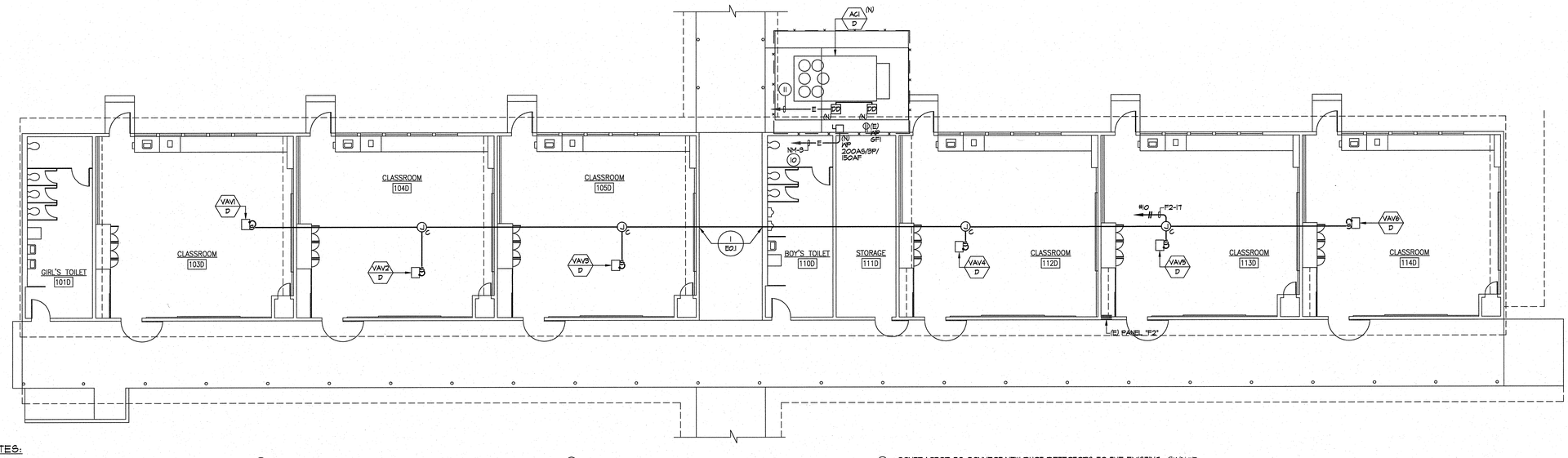

REMODEL NOTES:

1. REFER TO GENERAL NOTES AND DEMOLITION NOTES, DRAWING E.01, FOR ADDITIONAL REQUIREMENTS.
2. CONTRACTOR TO UPDATE PANEL DIRECTORY FOR ALL REMOVED AND ADDED HVAC EQUIPMENT.
3. THE CONTRACTOR SHALL NOTE THAT THE DRAWING IS DIAGRAMMATIC. EXACT ROUTING OF NEW CONDUITS AND LOCATION OF JUNCTION BOXES AND PULL BOXES SHALL BE COORDINATED AND DETERMINED IN THE FIELD. NEW CONDUIT, JUNCTION BOXES AND PULL BOXES SHALL BE ROUTED / PLACED IN SUCH A MANNER AS TO ADHERE TO ALL APPLICABLE CODES AND TO AVOID INTERFERENCE WITH EXISTING BUILDING STRUCTURES, UTILITIES AND THE WORK BEING PERFORMED BY OTHER TRADES. ALL EXTERIOR CONDUIT, FITTINGS, JUNCTION BOXES AND PULL BOXES TO BE WEATHER PROOF TYPE: NEMA 3R.
4. EXTERIOR MOUNTED DEVICES SHALL BE PROVIDED COMPLETE WITH WEATHERPROOF COVERS U.L. LISTED FOR WET LOCATIONS WHEN IN USE. PLASTIC COVERS NOT ALLOWED.
5. CIRCUITS INDICATED ON THE PANEL SCHEDULES, WHETHER SHOWN ON THE DRAWING OR NOT, SHALL BE A PART OF THIS CONTRACT AND THE RESPONSIBILITY OF THE CONTRACTOR TO PROVIDE REQUIRED CONDUIT AND WIRE AS REQUIRED TO MEET THE INTENT OF THE PLANS AND SPECIFICATIONS.
6. SEE SINGLE LINE DIAGRAM, DRAWING E.02 FOR CONDUIT SIZE AND WIRE SIZE AND QUANTITIES REQUIRED FOR ALL ELECTRICAL EQUIPMENT.
7. THE CONTRACTOR SHALL PROVIDE AN UPDATED TYPED PANEL DIRECTORY FOR ALL PANELS WITHIN SCOPE OF WORK UPON COMPLETION OF WORK. HAND WRITTEN DIRECTORY NOT ALLOWED.
8. THE CONTRACTOR SHALL REFER TO THE MECHANICAL AND PLUMBING DRAWINGS FOR EXACT EQUIPMENT LOCATIONS AND ELECTRICAL CONNECTIONS REQUIREMENTS. CONTRACTOR SHALL PROVIDE ALL POWER AND CONTROL CONNECTIONS AS INDICATED ON THE MECHANICAL AND PLUMBING DRAWINGS.
9. ALL CIRCUITS SERVING THE REMODEL AREA, WHETHER IDENTIFIED ON PLAN OR NOT, SHALL BE TRACED AND IDENTIFIED PRIOR TO START OF THE DEMOLITION PHASE. CIRCUITS AFFECTED BY THE REMODEL THAT SERVE AREAS OF THE BUILDING THAT ARE NOT A PART OF THE REMODEL SHALL BE MAINTAINED IN OPERATION DURING THE CONSTRUCTION PHASE. INTERRUPTION OF SERVICE WILL NOT BE ALLOWED.
10. CONTRACTOR TO CONNECT NEW AC UNIT TO THE EXISTING CONDUCTORS PREVIOUSLY FEEDING THE REMOVED AC UNIT. CONTRACTOR TO PROVIDE AND EXTEND NEW CONDUIT / CONDUCTORS AS REQUIRED TO ENSURE A FULLY OPERABLE AC UNIT UPON COMPLETION OF INSTALLATION.
11. CONTRACTOR TO CONNECT NEW DUCT DETECTORS TO THE EXISTING CONDUIT.

NORTH

BUILDING D - REMODEL POWER PLAN — 1/8" = 1'-0" — 2

ARCHITECTS
WLC
CLIENT FOCUSED • PASSION DRIVEN

SOUTHERN CALIFORNIA
8163 ROCHESTER AVENUE, SUITE 100
RANCHO CUCAMONGA
CALIFORNIA 91730-0729

TEL: 909-987-0909
www.wlcarchitects.com

LONGFELLOW ELEMENTARY SCHOOL HVAC REPLACEMENT

COMPTON UNIFIED SCHOOL DISTRICT

1101 S DWIGHT AVE.
COMPTON, CA 90220

LICENSED ARCHITECT — MARK GRAHAM — C-28046 — 03-31-19 — STATE OF CALIFORNIA

REGISTERED PROFESSIONAL ENGINEER — RICHARD E. STATEN — No. E17229 — 6/30/18 — STATE OF CALIFORNIA

CONSULTANT
A&F ENGINEERING GROUP, INC.
9320 BASELINE RD., SUITE C, RANCHO CUCAMONGA, CA 91701
TEL. (909) 941-3008 FAX (909) 941-3021

IDENTIFICATION STAMP
DSA OF THE STATE ARCHITECT
OFFICE OF REGULATION SERVICES
APPL 03-118423
FILE: 19-23
AC — FLS — SS EY
DATE 10/6/2018

NO	DATE	BY	DESCRIPTION
			REVISIONS

DRAWN: LS	CHECKED: RES
DATE: 3/6/2018	SCALE: AS NOTED
PROJECT NUMBER: 1723400	

BUILDING D
DEMOLITION AND
REMODEL PLANS

DRAWING NUMBER: E2.2

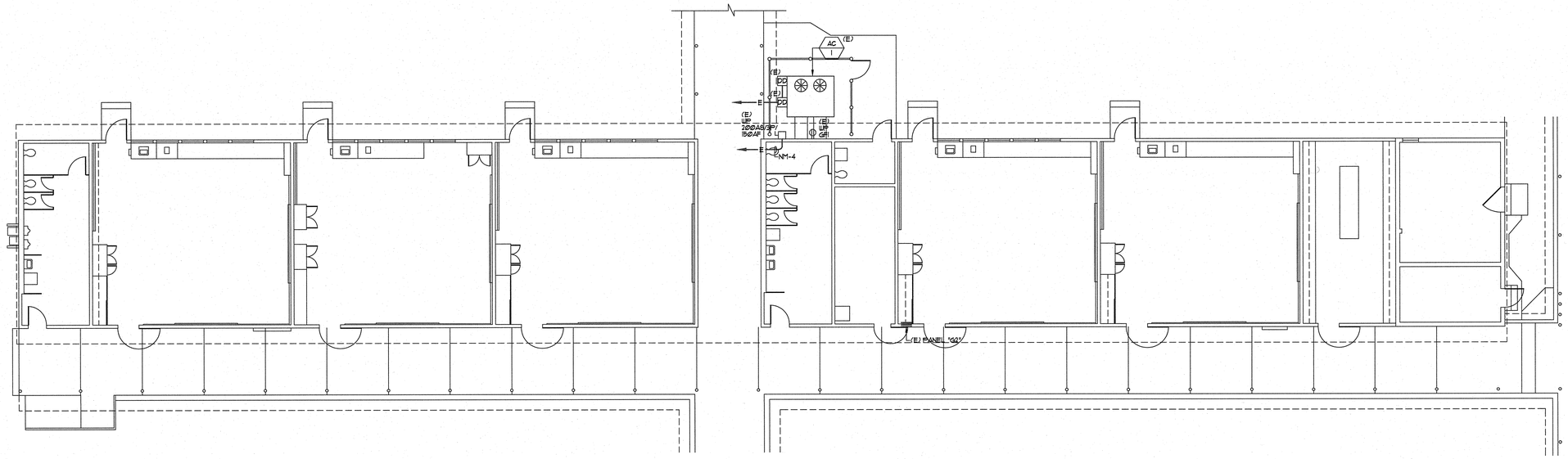

DEMOLITION NOTES:

1. REFER TO GENERAL NOTES AND DEMOLITION NOTES, DRAWING E.ØI, FOR ADDITIONAL REQUIREMENTS.

NORTH

BUILDING E - DEMOLITION POWER PLAN

1/8" = 1'-0" | 1

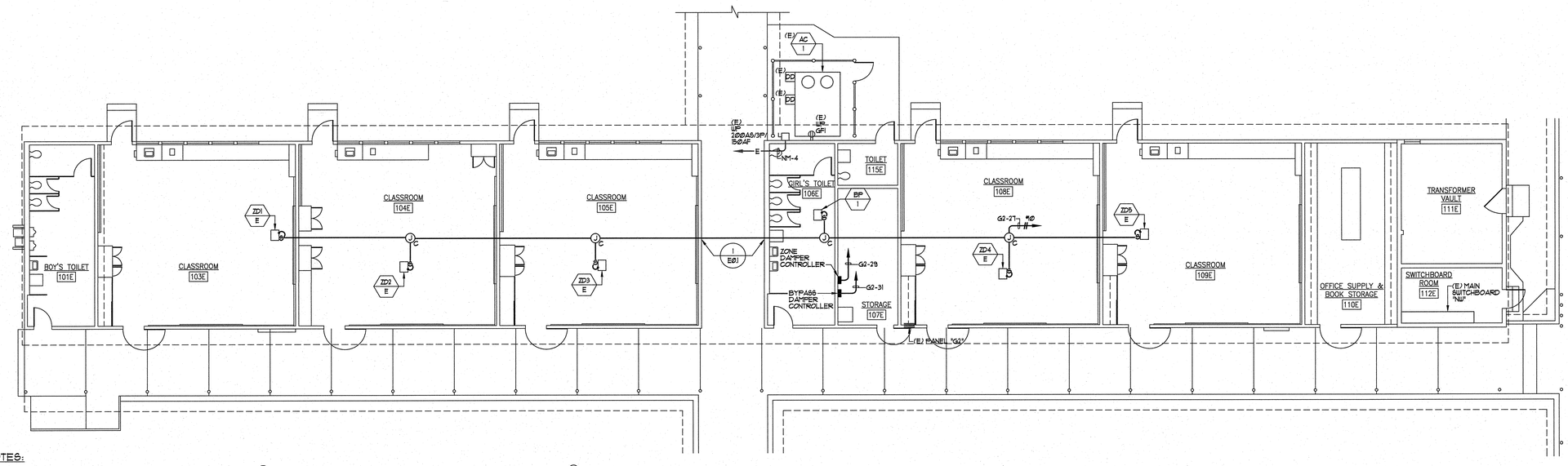

REMODEL NOTES:

1. REFER TO GENERAL NOTES AND DEMOLITION NOTES, DRAWING E.ØI, FOR ADDITIONAL REQUIREMENTS.
2. CONTRACTOR TO UPDATE PANEL DIRECTORY FOR ALL REMOVED AND ADDED HVAC EQUIPMENT.
3. THE CONTRACTOR SHALL NOTE THAT THE DRAWING IS DIAGRAMMATIC. EXACT ROUTING OF NEW CONDUITS AND LOCATION OF JUNCTION BOXES AND PULL BOXES SHALL BE COORDINATED AND DETERMINED IN THE FIELD. NEW CONDUIT, JUNCTION BOXES AND PULL BOXES SHALL BE ROUTED / PLACED IN SUCH A MANNER AS TO ADHERE TO ALL APPLICABLE CODES AND TO AVOID INTERFERENCE WITH EXISTING BUILDING STRUCTURES, UTILITIES AND THE WORK BEING PERFORMED BY OTHER TRADES. ALL EXTERIOR CONDUIT, FITTINGS, JUNCTION BOXES AND PULL BOXES TO BE WEATHER PROOF TYPE: NEMA 3R.
4. EXTERIOR MOUNTED DEVICES SHALL BE PROVIDED COMPLETE WITH WEATHERPROOF COVERS UL. LISTED FOR WET LOCATIONS WHEN IN USE. PLASTIC COVERS NOT ALLOWED.
5. CIRCUITS INDICATED ON THE PANEL SCHEDULES, WHETHER SHOWN ON THE DRAWING OR NOT, SHALL BE A PART OF THIS CONTRACT AND THE RESPONSIBILITY OF THE CONTRACTOR TO PROVIDE REQUIRED CONDUIT AND WIRE AS REQUIRED TO MEET THE INTENT OF THE PLANS AND SPECIFICATIONS.
6. SEE SINGLE LINE DIAGRAM, DRAWING E.ØØ2 FOR CONDUIT SIZE AND WIRE SIZE AND QUANTITIES REQUIRED FOR ALL ELECTRICAL EQUIPMENT.
7. THE CONTRACTOR SHALL PROVIDE AN UPDATED TYPED PANEL DIRECTORY FOR ALL PANELS WITHIN SCOPE OF WORK UPON COMPLETION OF WORK HAND WRITTEN DIRECTORY NOT ALLOWED.
8. THE CONTRACTOR SHALL REFER TO THE MECHANICAL AND PLUMBING DRAWINGS FOR EXACT EQUIPMENT LOCATIONS AND ELECTRICAL CONNECTIONS REQUIREMENTS. CONTRACTOR SHALL PROVIDE ALL POWER AND CONTROL CONNECTIONS AS INDICATED ON THE MECHANICAL AND PLUMBING DRAWINGS.
9. ALL CIRCUITS SERVING THE REMODEL AREA, WHETHER IDENTIFIED ON PLAN OR NOT SHALL BE TRACED AND IDENTIFIED PRIOR TO START OF THE DEMOLITION PHASE. CIRCUITS AFFECTED BY THE REMODEL THAT SERVE AREAS OF THE BUILDING THAT ARE NOT A PART OF THE REMODEL SHALL BE MAINTAINED IN OPERATION DURING THE CONSTRUCTION PHASE. INTERRUPTION OF SERVICE WILL NOT BE ALLOWED.

NORTH

BUILDING E - REMODEL POWER PLAN

1/8" = 1'-0" | 2

ARCHITECTS
WLC
CLIENT FOCUSED • PASSION DRIVEN

SOUTHERN CALIFORNIA
8163 ROCHESTER AVENUE, SUITE 100
RANCHO CUCAMONGA
CALIFORNIA 91730-0729
TEL: 909-987-0909
www.wlcarchitects.com

LONGFELLOW ELEMENTARY SCHOOL
HVAC REPLACEMENT
COMPTON UNIFIED SCHOOL DISTRICT
1101 S DWIGHT AVE.
COMPTON, CA 90220

LICENSED ARCHITECT — MARK GRAHAM — C-26046 — 03-31-19 — STATE OF CALIFORNIA

REGISTERED PROFESSIONAL ENGINEER — ORLANDO L. STOTO — No. E17229 — 6/30/18 — STATE OF CALIFORNIA

CONSULTANT
A&P ENGINEERING GROUP, INC.
8200 HAVEN AVE. SUITE C, RANCHO CUCAMONGA, CA 91701
TEL: (909) 941-3000 FAX (909) 941-8211

IDENTIFICATION STAMP
DIV. OF THE STATE ARCHITECT
OFFICE OF REGULATION SERVICES
APPL 03-118423
AC — FLS — SS
DATE 8/13 07 6 2018
FILE: 19-23

NO	DATE	BY	DESCRIPTION
1			REVISIONS

DRAWN: LS	CHECKED: RES
DATE: 3/6/2018	SCALE: AS NOTED
PROJECT NUMBER: 1723400	

BUILDING E
DEMOLITION AND
REMODEL PLANS

DRAWING NUMBER: E2.3

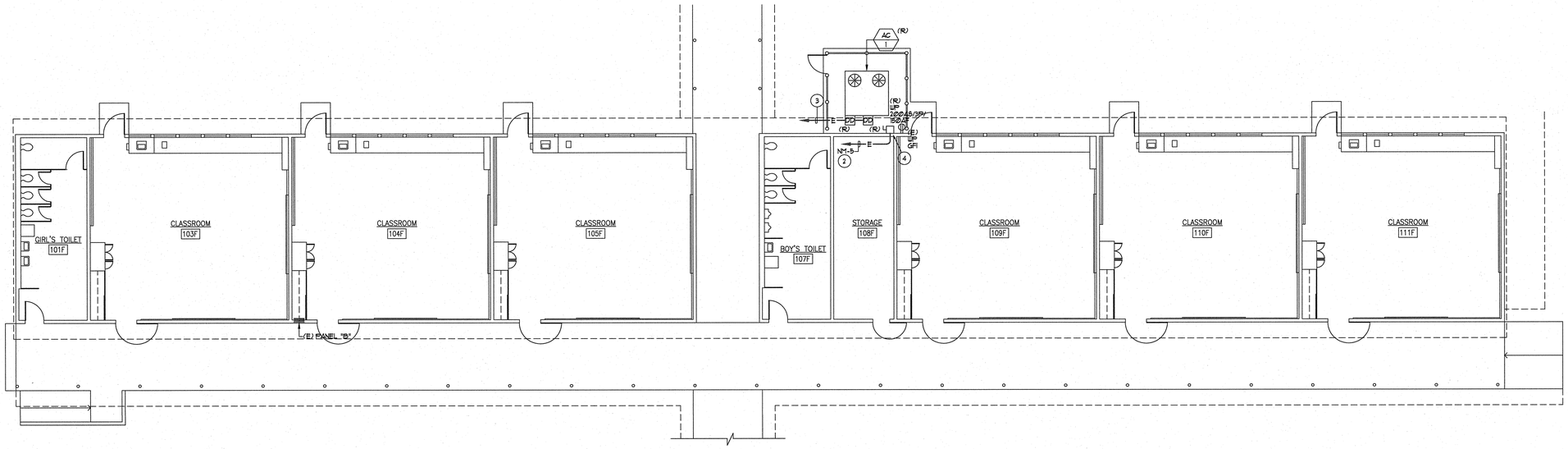

DEMOLITION NOTES:

1. REFER TO GENERAL NOTES AND DEMOLITION NOTES, DRAWING E.01, FOR ADDITIONAL REQUIREMENTS.
2. CONTRACTOR TO REMOVE AC UNIT AND DISCONNECT SWITCH ONLY. EXISTING CONDUIT AND CONDUCTORS TO BE USED TO ENERGIZE THE NEW AC UNIT. NO NEW LOAD INCREASE. REFER TO REMODEL PLAN FOR ADDITIONAL REQUIREMENTS.
3. CONTRACTOR TO REMOVE DUCT DETECTORS ONLY. EXISTING CONDUIT AND CONDUCTORS TO BE USED TO ENERGIZE THE NEW DUCT DETECTORS. REFER TO REMODEL PLAN FOR ADDITIONAL REQUIREMENTS.
4. CONTRACTOR TO REMOVE AC UNIT AND DISCONNECT SWITCH ONLY. HE SHALL PROVIDE A NEW 12"X12"X6" NEMA 3R PULL BOX IN ITS PLACE TO EXTEND NEW CONDUIT AND CONDUCTORS TO THE NEW DISCONNECT SWITCH LOCATION. REFER TO REMODEL PLAN FOR ADDITIONAL REQUIREMENTS.

NORTH

BUILDING F - DEMOLITION POWER PLAN

1/8" = 1'-0" | 1

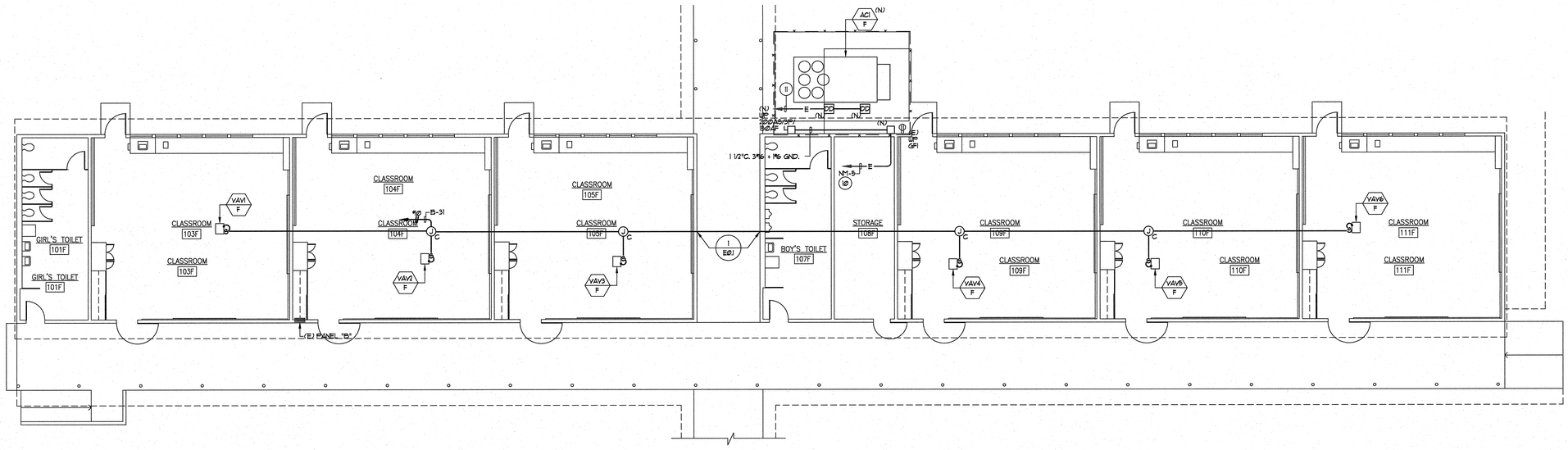

REMODEL NOTES:

1. REFER TO GENERAL NOTES AND DEMOLITION NOTES, DRAWING E.01, FOR ADDITIONAL REQUIREMENTS.
2. CONTRACTOR TO UPDATE PANEL DIRECTORY FOR ALL REMOVED AND ADDED HVAC EQUIPMENT.
3. THE CONTRACTOR SHALL NOTE THAT THE DRAWING IS DIAGRAMMATIC. EXACT ROUTING OF NEW CONDUITS AND LOCATION OF JUNCTION BOXES AND PULL BOXES SHALL BE COORDINATED AND DETERMINED IN THE FIELD. NEW CONDUIT, JUNCTION BOXES AND PULL BOXES SHALL BE ROUTED / PLACED IN SUCH A MANNER AS TO ADHERE TO ALL APPLICABLE CODES AND TO AVOID INTERFERENCE WITH EXISTING BUILDING STRUCTURES, UTILITIES AND THE WORK BEING PERFORMED BY OTHER TRADES. ALL EXTERIOR CONDUIT, FITTINGS, JUNCTION BOXES AND PULL BOXES TO BE WEATHER PROOF TYPE: NEMA 3R.
4. EXTERIOR MOUNTED DEVICES SHALL BE PROVIDED COMPLETE WITH WEATHERPROOF COVERS U.L. LISTED FOR WET LOCATIONS WHEN IN USE. PLASTIC COVERS NOT ALLOWED.
5. CIRCUITS INDICATED ON THE PANEL SCHEDULES, WHETHER SHOWN ON THE DRAWING OR NOT, SHALL BE A PART OF THIS CONTRACT AND THE RESPONSIBILITY OF THE CONTRACTOR TO PROVIDE REQUIRED CONDUIT AND WIRE AS REQUIRED TO MEET THE INTENT OF THE PLANS AND SPECIFICATIONS.
6. SEE SINGLE LINE DIAGRAM, DRAWING E.02 FOR CONDUIT SIZE AND WIRE SIZE AND QUANTITIES REQUIRED FOR ALL ELECTRICAL EQUIPMENT.
7. THE CONTRACTOR SHALL PROVIDE AN UPDATED TYPED PANEL DIRECTORY FOR ALL PANELS WITHIN SCOPE OF WORK UPON COMPLETION OF WORK. HAND WRITTEN DIRECTORY NOT ALLOWED.
8. THE CONTRACTOR SHALL REFER TO THE MECHANICAL AND PLUMBING DRAWINGS FOR EXACT EQUIPMENT LOCATIONS AND ELECTRICAL CONNECTIONS REQUIREMENTS. CONTRACTOR SHALL PROVIDE ALL POWER AND CONTROL CONNECTIONS AS INDICATED ON THE MECHANICAL AND PLUMBING DRAWINGS.
9. ALL CIRCUITS SERVING THE REMODEL AREA, WHETHER IDENTIFIED ON PLAN OR NOT, SHALL BE TRACED AND IDENTIFIED PRIOR TO START OF THE DEMOLITION PHASE. CIRCUITS AFFECTED BY THE REMODEL THAT SERVE AREAS OF THE BUILDING THAT ARE NOT A PART OF THE REMODEL SHALL BE MAINTAINED IN OPERATION DURING THE CONSTRUCTION PHASE. INTERRUPTION OF SERVICE WILL NOT BE ALLOWED.
10. CONTRACTOR TO CONNECT NEW AC UNIT TO THE EXISTING CONDUCTORS PREVIOUSLY FEEDING THE REMOVED AC UNIT. CONTRACTOR TO PROVIDE AND EXTEND NEW CONDUIT / CONDUCTORS FROM THE NEW PULL BOX AS REQUIRED TO ENSURE A FULLY OPERABLE AC UNIT UPON COMPLETION OF INSTALLATION.
11. CONTRACTOR TO CONNECT NEW DUCT DETECTORS TO THE EXISTING CONDUIT (

NORTH

BUILDING F - REMODEL POWER PLAN

1/8" = 1'-0" | 2

WLC ARCHITECTS
CLIENT FOCUSED • PASSION DRIVEN

SOUTHERN CALIFORNIA
8163 ROCHESTER AVENUE, SUITE 100
RANCHO CUCAMONGA
CALIFORNIA 91730-0729
TEL: 909-987-0909
www.wlcarchitects.com

LONGFELLOW ELEMENTARY SCHOOL
HVAC REPLACEMENT
COMPTON UNIFIED SCHOOL DISTRICT
1101 S DWIGHT AVE.
COMPTON, CA 90220

LICENSED ARCHITECT MARK GRAHAM C-26046 03-31-19 STATE OF CALIFORNIA

REGISTERED PROFESSIONAL ENGINEER ISLANDO E. SOTELO No. E17229 6/30/18 STATE OF CALIFORNIA

CONSULTANT
A&F ENGINEERING GROUP, INC.
9320 BASELINE RD., SUITE C, RANCHO CUCAMONGA, CA 91701
TEL: (909) 941-3008 FAX (909) 941-8211

IDENTIFICATION STAMP
DIV. OF THE STATE ARCHITECT
OFFICE OF REGULATION SERVICES
APPL 03-118423
AC — FLS — SS EY
DATE 10/3 0/5 2018
FILE: 19-23

NO	DATE	BY	DESCRIPTION
1			REVISIONS

DRAWN: LS	CHECKED: RES
DATE: 3/6/2018	SCALE: AS NOTED
PROJECT NUMBER: 1723400	

BUILDING F DEMOLITION AND REMODEL PLANS

DRAWING NUMBER: **E2.4**

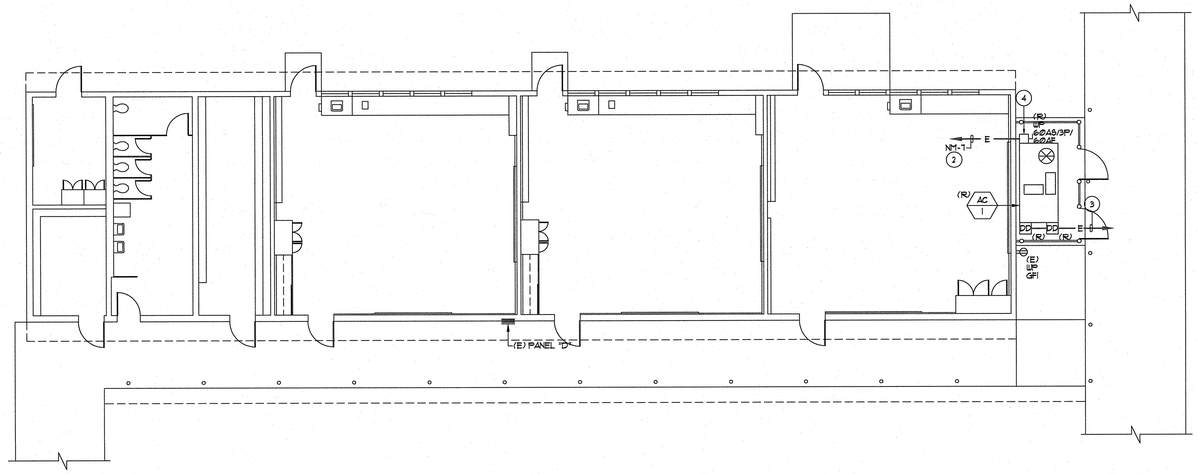

DEMOLITION NOTES:

1. REFER TO GENERAL NOTES AND DEMOLITION NOTES, DRAWING E.01, FOR ADDITIONAL REQUIREMENTS.
2. CONTRACTOR TO REMOVE AC UNIT AND DISCONNECT SWITCH ONLY. EXISTING CONDUIT AND CONDUCTORS TO BE USED TO ENERGIZE THE NEW AC UNIT. NO NEW LOAD INCREASE. REFER TO REMODEL PLAN FOR ADDITIONAL REQUIREMENTS.
3. CONTRACTOR TO REMOVE DUCT DETECTORS ONLY. HE SHALL PROVIDE A NEW 12"X12"X6" NEMA 3R PULL BOX IN ITS PLACE TO EXTEND NEW CONDUIT AND CONDUCTORS TO THE NEW DUCT DETECTOR LOCATION. REFER TO REMODEL PLAN FOR ADDITIONAL REQUIREMENTS.
4. CONTRACTOR TO REMOVE AC UNIT AND DISCONNECT SWITCH ONLY. HE SHALL PROVIDE A NEW 12"X12"X6" NEMA 3R PULL BOX IN ITS PLACE TO EXTEND NEW CONDUIT AND CONDUCTORS TO THE NEW DISCONNECT SWITCH LOCATION. REFER TO REMODEL PLAN FOR ADDITIONAL REQUIREMENTS.

NORTH

BUILDING G - DEMOLITION POWER PLAN | 1/8" = 1'-0" | 1

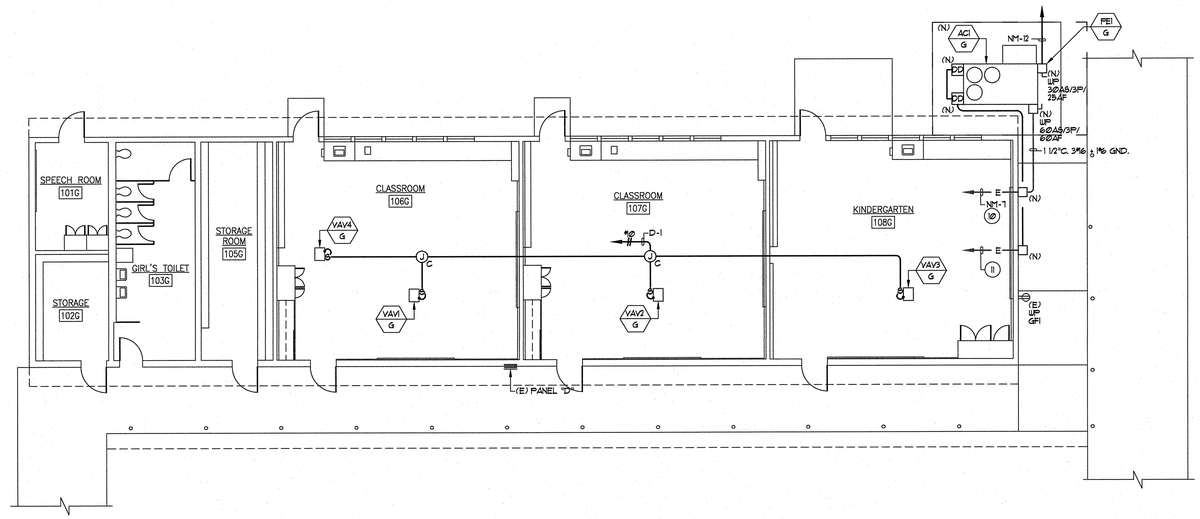

REMODEL NOTES:

1. REFER TO GENERAL NOTES AND DEMOLITION NOTES, DRAWING E.01, FOR ADDITIONAL REQUIREMENTS.
2. CONTRACTOR TO UPDATE PANEL DIRECTORY FOR ALL REMOVED AND ADDED HVAC EQUIPMENT.
3. THE CONTRACTOR SHALL NOTE THAT THE DRAWING IS DIAGRAMMATIC. EXACT ROUTING OF NEW CONDUITS AND LOCATION OF JUNCTION BOXES AND PULL BOXES SHALL BE COORDINATED AND DETERMINED IN THE FIELD. NEW CONDUIT, JUNCTION BOXES AND PULL BOXES SHALL BE ROUTED / PLACED IN SUCH A MANNER AS TO ADHERE TO ALL APPLICABLE CODES AND TO AVOID INTERFERENCE WITH EXISTING BUILDING STRUCTURES, UTILITIES AND THE WORK BEING PERFORMED BY OTHER TRADES. ALL EXTERIOR CONDUIT, FITTINGS, JUNCTION BOXES AND PULL BOXES TO BE WEATHER PROOF TYPE: NEMA 3R.
4. EXTERIOR MOUNTED DEVICES SHALL BE PROVIDED COMPLETE WITH WEATHERPROOF COVERS U.L. LISTED FOR WET LOCATIONS WHEN IN USE. PLASTIC COVERS NOT ALLOWED.
5. CIRCUITS INDICATED ON THE PANEL SCHEDULES, WHETHER SHOWN ON THE DRAWING OR NOT, SHALL BE A PART OF THIS CONTRACT AND THE RESPONSIBILITY OF THE CONTRACTOR TO PROVIDE REQUIRED CONDUIT AND WIRE AS REQUIRED TO MEET THE INTENT OF THE PLANS AND SPECIFICATIONS.
6. SEE SINGLE LINE DIAGRAM, DRAWING E.02 FOR CONDUIT SIZE AND WIRE SIZE AND QUANTITIES REQUIRED FOR ALL ELECTRICAL EQUIPMENT.
7. THE CONTRACTOR SHALL PROVIDE AN UPDATED TYPED PANEL DIRECTORY FOR ALL PANELS WITHIN SCOPE OF WORK UPON COMPLETION OF WORK. HAND WRITTEN DIRECTORY NOT ALLOWED.
8. THE CONTRACTOR SHALL REFER TO THE MECHANICAL AND PLUMBING DRAWINGS FOR EXACT EQUIPMENT LOCATIONS AND ELECTRICAL CONNECTIONS REQUIREMENTS. CONTRACTOR SHALL PROVIDE ALL POWER AND CONTROL CONNECTIONS AS INDICATED ON THE MECHANICAL AND PLUMBING DRAWINGS.
9. ALL CIRCUITS SERVING THE REMODEL AREA, WHETHER IDENTIFIED ON PLAN OR NOT, SHALL BE TRACED AND IDENTIFIED PRIOR TO START OF THE DEMOLITION PHASE. CIRCUITS AFFECTED BY THE REMODEL THAT SERVE AREAS OF THE BUILDING THAT ARE NOT A PART OF THE REMODEL SHALL BE MAINTAINED IN OPERATION DURING THE CONSTRUCTION PHASE. INTERRUPTION OF SERVICE WILL NOT BE ALLOWED.
10. CONTRACTOR TO CONNECT NEW AC UNIT TO THE EXISTING CONDUCTORS PREVIOUSLY FEEDING THE REMOVED AC UNIT. CONTRACTOR TO PROVIDE AND EXTEND NEW CONDUIT / CONDUCTORS FROM THE NEW PULL BOX AS REQUIRED TO ENSURE A FULLY OPERABLE AC UNIT UPON COMPLETION OF INSTALLATION.
11. CONTRACTOR TO CONNECT NEW DUCT DETECTORS TO THE EXISTING CONDUIT (

NORTH

BUILDING G - REMODEL POWER PLAN | 1/8" = 1'-0" | 2

ARCHITECTS
WLC
CLIENT FOCUSED • PASSION DRIVEN

SOUTHERN CALIFORNIA
8163 ROCHESTER AVENUE, SUITE 100
RANCHO CUCAMONGA
CALIFORNIA 91730-0729
TEL: 909-987-0909
www.wlcarchitects.com

LONGFELLOW ELEMENTARY SCHOOL HVAC REPLACEMENT

COMPTON UNIFIED SCHOOL DISTRICT
1101 S DWIGHT AVE.
COMPTON, CA 90220

LICENSED ARCHITECT — MARK GRAHAM — C-26046 — 03-31-19 — STATE OF CALIFORNIA
REGISTERED PROFESSIONAL ENGINEER — ROLANDO L. SORIANO — No. 51729 — 6/30/19 — STATE OF CALIFORNIA

CONSULTANT
A&P ENGINEERING GROUP, INC.
9320 BASELINE RD. SUITE C, RANCHO CUCAMONGA, CA 91701
TEL: (909) 941-3006 FAX (909) 941-9251

IDENTIFICATION STAMP
DIV. OF THE STATE ARCHITECT
OFFICE OF REGULATION SERVICES
APPL 03-118423
FILE: 19-23
AC — FLS — SS — EY
DATE — MAR 0 6 2019

NO	DATE	BY	DESCRIPTION
1			REVISIONS

DRAWN: LS	CHECKED: RES
DATE: 3/6/2018	SCALE: AS NOTED
PROJECT NUMBER: 1723400	

BUILDING G
DEMOLITION AND
REMODEL PLANS

DRAWING NUMBER: E2.5

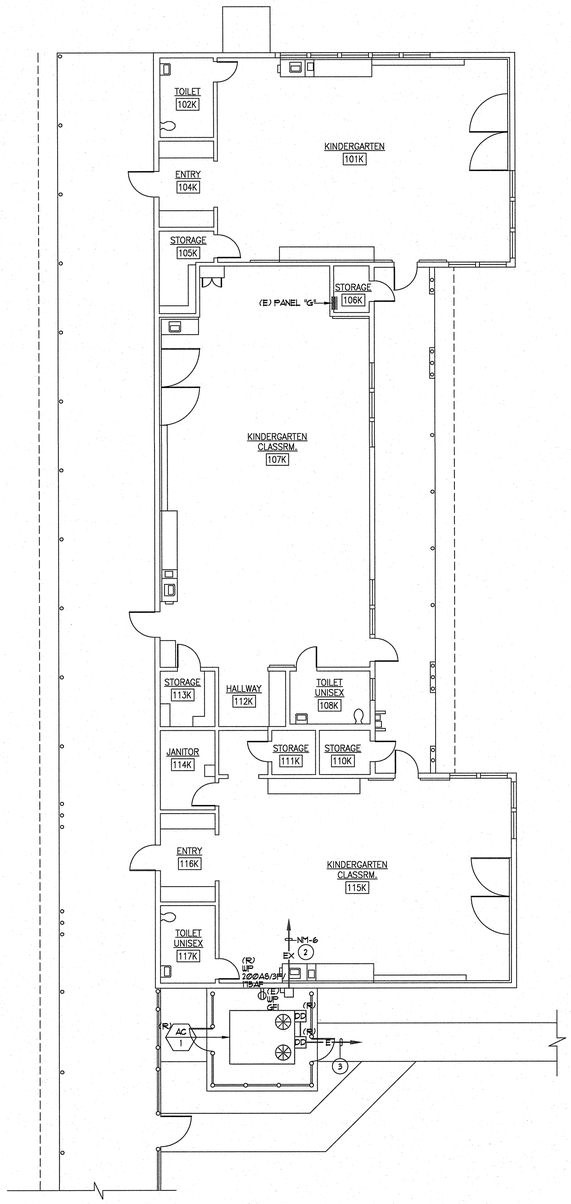

PLAN NOTES:

1. REFER TO GENERAL NOTES AND DEMOLITION NOTES, DRAWING E.01, FOR ADDITIONAL REQUIREMENTS.
2. CONTRACTOR TO REMOVE AC UNIT, CONDUCTORS AND DISCONNECT SWITCH. EXISTING CONDUIT TO REMAIN AND BE USED TO ROUTE NEW CONDUCTORS TO ENERGIZE THE NEW AC UNIT. REFER TO REMODEL PLAN FOR ADDITIONAL REQUIREMENTS.
3. CONTRACTOR TO REMOVE DUCT DETECTORS ONLY. EXISTING CONDUIT AND CONDUCTORS TO BE USED TO ENERGIZE THE NEW DUCT DETECTORS. REFER TO REMODEL PLAN FOR ADDITIONAL REQUIREMENTS.

NORTH

BUILDING K - DEMOLITION POWER PLAN

1/8" = 1'-0" | 1

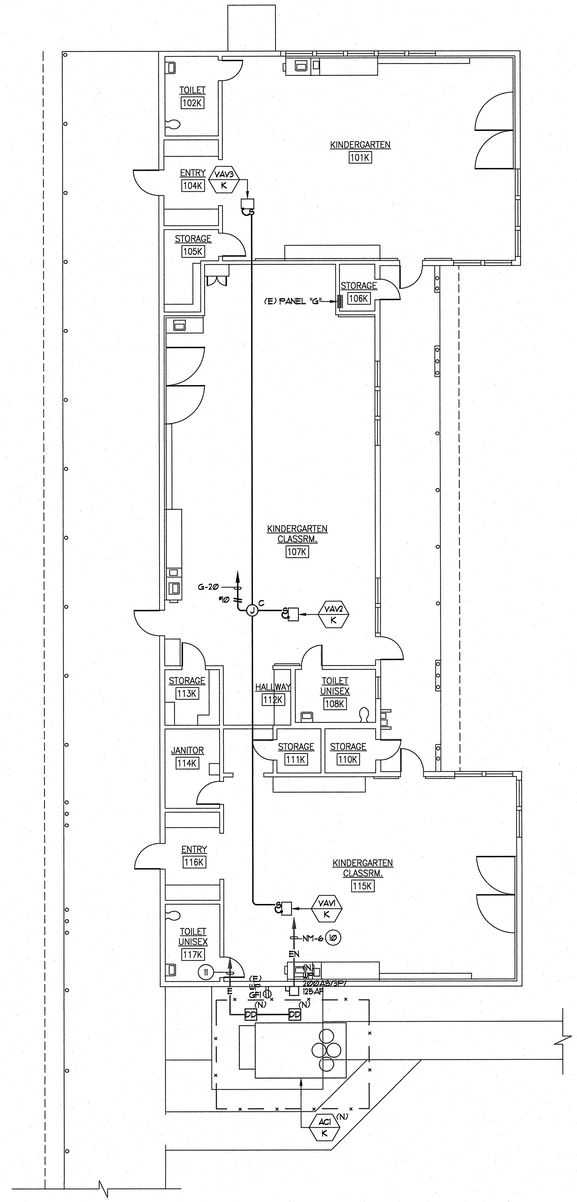

PLAN NOTES:

1. REFER TO GENERAL NOTES AND DEMOLITION NOTES, DRAWING E.01, FOR ADDITIONAL REQUIREMENTS.
2. CONTRACTOR TO UPDATE PANEL DIRECTORY FOR ALL REMOVED AND ADDED HVAC EQUIPMENT.
3. THE CONTRACTOR SHALL NOTE THAT THE DRAWING IS DIAGRAMMATIC. EXACT ROUTING OF NEW CONDUITS AND LOCATION OF JUNCTION BOXES AND PULL BOXES SHALL BE COORDINATED AND DETERMINED IN THE FIELD. NEW CONDUIT, JUNCTION BOXES AND PULL BOXES SHALL BE ROUTED / PLACED IN SUCH A MANNER AS TO ADHERE TO ALL APPLICABLE CODES AND TO AVOID INTERFERENCE WITH EXISTING BUILDING STRUCTURES, UTILITIES AND THE WORK BEING PERFORMED BY OTHER TRADES. ALL EXTERIOR CONDUIT, FITTINGS, JUNCTION BOXES AND PULL BOXES TO BE WEATHER PROOF TYPE: NEMA 3R.
4. EXTERIOR MOUNTED DEVICES SHALL BE PROVIDED COMPLETE WITH WEATHERPROOF COVERS ULL LISTED FOR WET LOCATIONS WHEN IN USE. PLASTIC COVERS NOT ALLOWED.
5. CIRCUITS INDICATED ON THE PANEL SCHEDULES, WHETHER SHOWN ON THE DRAWING OR NOT, SHALL BE A PART OF THIS CONTRACT AND THE RESPONSIBILITY OF THE CONTRACTOR TO PROVIDE REQUIRED CONDUIT AND WIRE AS REQUIRED TO MEET THE INTENT OF THE PLANS AND SPECIFICATIONS.
6. SEE SINGLE LINE DIAGRAM, DRAWING E.02 FOR CONDUIT SIZE AND WIRE SIZE AND QUANTITIES REQUIRED FOR ALL ELECTRICAL EQUIPMENT.
7. THE CONTRACTOR SHALL PROVIDE AN UPDATED TYPED PANEL DIRECTORY FOR ALL PANELS WITHIN SCOPE OF WORK UPON COMPLETION OF WORK. HAND WRITTEN DIRECTORY NOT ALLOWED.
8. THE CONTRACTOR SHALL REFER TO THE MECHANICAL AND PLUMBING DRAWINGS FOR EXACT EQUIPMENT LOCATIONS AND ELECTRICAL CONNECTIONS REQUIREMENTS. CONTRACTOR SHALL PROVIDE ALL POWER AND CONTROL CONNECTIONS AS INDICATED ON THE MECHANICAL AND PLUMBING DRAWINGS.
9. ALL CIRCUITS SERVING THE REMODEL AREA, WHETHER IDENTIFIED ON PLAN OR NOT SHALL BE TRACED AND IDENTIFIED PRIOR TO START OF THE DEMOLITION PHASE. CIRCUITS AFFECTED BY THE REMODEL THAT SERVE AREAS OF THE BUILDING THAT ARE NOT A PART OF THE REMODEL SHALL BE MAINTAINED IN OPERATION DURING THE CONSTRUCTION PHASE. INTERRUPTION OF SERVICE WILL NOT BE ALLOWED.
10. CONTRACTOR TO ROUTE NEW CONDUCTORS WITHIN THE EXISTING CONDUIT PREVIOUSLY ROUTED TO THE REMOVED AC UNIT. CONTRACTOR TO PROVIDE AND EXTEND NEW CONDUIT AS REQUIRED TO ENSURE A FULLY OPERABLE AC UNIT UPON COMPLETION OF INSTALLATION.
11. CONTRACTOR TO CONNECT NEW DUCT DETECTORS TO THE EXISTING CONDUIT

NORTH

BUILDING K - REMODEL POWER PLAN

1/8" = 1'-0" | 2

ARCHITECTS
WLC
CLIENT FOCUSED • PASSION DRIVEN

SOUTHERN CALIFORNIA
8163 ROCHESTER AVENUE, SUITE 100
RANCHO CUCAMONGA
CALIFORNIA 91730-0729
TEL: 909-987-0909
www.wlcarchitects.com

LONGFELLOW ELEMENTARY SCHOOL
HVAC REPLACEMENT
COMPTON UNIFIED SCHOOL DISTRICT
1101 S DWIGHT AVE.
COMPTON, CA 90220

LICENSED ARCHITECT
MARK GRAHAM
C-26046
03-31-19
STATE OF CALIFORNIA

REGISTERED PROFESSIONAL ENGINEER
RICHARD E. SOTELO
No. E17328
6/30/18
STATE OF CALIFORNIA

CONSULTANT
A&P ENGINEERING GROUP, INC.
9320 BASELINE RD., SUITE C, RANCHO CUCAMONGA, CA 91701
TEL: (909) 941-3008 FAX: (909) 941-8211

IDENTIFICATION STAMP
DIV. OF THE STATE ARCHITECT
OFFICE OF REGULATION SERVICES
APPL 03-118423
AC — FLS — SS EY
DATE MAR 0-5 2018
FILE: 19-23

NO	DATE	BY	DESCRIPTION
1			REVISIONS

DRAWN: LS	CHECKED: RES
DATE: 3/6/2018	SCALE: AS NOTED
PROJECT NUMBER: 1723400	

BUILDING K
DEMOLITION AND
REMODEL PLANS

DRAWING NUMBER: E2.6

LONGFELLOW ELEMENTARY SCHOOL HVAC REPLACEMENT
COMPTON UNIFIED SCHOOL DISTRICT
1101 S DWIGHT AVE.
COMPTON, CA 90220

THIS APPLICATION DSA A#03-118423
SHALL NOT BE CLOSED WITH
CERTIFICATION UNTIL DSA A#03-119653
IS CLOSED WITH CERTIFICATION.

GENERAL NOTES

1. THESE DRAWINGS DO NOT CONTAIN THE NECESSARY COMPONENTS FOR CONSTRUCTION SAFETY.

2. LOCATIONS OF ALL UTILITIES SHOWN ARE APPROXIMATE AND CONTRACTOR SHALL EXERCISE EXTREME CAUTION IN EXCAVATING AND TRENCHING ON THIS SITE TO AVOID INTERCEPTING EXISTING PIPING OR CONDUITS. IT SHALL BE THE RESPONSIBILITY OF THE CONTRACTOR TO LOCATE ALL EXISTING UTILITIES WHETHER SHOWN HEREON OR NOT AND TO PROTECT THEM FROM DAMAGE. THE ARCHITECT IS NOT RESPONSIBLE FOR THE LOCATION OF UNDERGROUND UTILITIES OR STRUCTURES WHETHER OR NOT SHOWN OR DETAILED AND INSTALLED BY ANY OTHER CONTRACT. THE CONTRACTOR SHALL IMMEDIATELY NOTIFY THE ARCHITECT SHOULD ANY UNIDENTIFIED CONDITIONS BE DISCOVERED. THE CONTRACTOR SHALL BEAR ALL EXPENSE OF REPAIR OR REPLACEMENT OF UTILITIES OR OTHER PROPERTY DAMAGED BY OPERATIONS IN CONJUNCTION WITH THE EXECUTION OF THIS WORK.

3. THESE DOCUMENTS AND THE IDEAS AND DESIGNS INCORPORATED HEREIN, AS AN INSTRUMENT OF PROFESSIONAL SERVICE, ARE THE PROPERTY OF WLC ARCHITECTS, INC., AND ARE NOT TO BE USED, IN WHOLE OR IN PART, FOR ANY OTHER PROJECT WITHOUT THE WRITTEN AUTHORIZATION OF WLC ARCHITECTS, INC.

4. THE WORK SHOWN ON THESE DRAWINGS AS EXISTING CONDITIONS WAS PREPARED FROM INFORMATION FURNISHED BY THE OWNER. WHILE THIS INFORMATION IS BELIEVED TO BE RELIABLE, WLC ARCHITECTS, INC. IS NOT RESPONSIBLE FOR THE ACCURACY OR ADEQUACY OF ANY WORK SHOWN AS EXISTING NOR IS WLC ARCHITECTS, INC. RESPONSIBLE FOR ANY ERRORS OR OMISSIONS WHICH MAY HAVE BEEN INCORPORATED INTO THESE DRAWINGS AS A RESULT.

5. EACH BIDDER SHALL POSSESS AT THE TIME OF BID A CLASS B OR THE APPROPRIATE CLASS C CONTRACTOR'S LICENSE PURSUANT TO PUBLIC CONTRACT CODE SECTION 3300 AND BUSINESS AND PROFESSIONS CODE SECTION 7028.15. THE SUCCESSFUL BIDDER MUST MAINTAIN THE LICENSE THROUGHOUT THE DURATION OF THIS CONTRACT.

6. FIRE SAFETY DURING CONSTRUCTION

   A. GENERAL: FIRE SAFETY DURING CONSTRUCTION SHALL COMPLY WITH CALIFORNIA FIRE CODE (CFC) CALIFORNIA CODE OF REGULATIONS (CCR) TITLE 24, PART 9, CHAPTER 5 AND CHAPTER 33.

   B. ACCESS ROADS: FIRE DEPARTMENT ACCESS ROADS SHALL BE ESTABLISHED AND MAINTAINED IN ACCORDANCE WITH CHAPTER 5, SECTION 501.4 AND CHAPTER 33, SECTION 3310.

   C. WATER SUPPLY: WATER MAINS AND HYDRANTS SHALL BE OPERATIONAL IN ACCORDANCE WITH CHAPTER 5, SECTION 501.4 AND CHAPTER 33,SECTION 3312.

   D. BUILDING ACCESS: ACCESS TO BUILDINGS FOR THE PURPOSE OF FIREFIGHTING SHALL BE PROVIDED. CONSTRUCTION MATERIAL SHALL NOT BLOCK ACCESS TO BUILDINGS, HYDRANTS OR FIRE APPLIANCES.

   E. ALTERATIONS OF BUILDINGS: SHALL COMPLY WITH APPLICABLE PROVISIONS OF CHAPTER 33.

   F. DEMOLITION OF BUILDINGS: SHALL COMPLY APPLICABLE PROVISIONS OF CHAPTER 33.

   G. FIRE WATCH: MAINTAIN FIRE WATCH WHEN REQUIRED BY THE BUILDING OFFICIAL AND WHEN EXISTING FIRE PROTECTION SYSTEMS ARE SHUT DOWN FOR ALTERATIONS IN ACCORDANCE WITH CHAPTER 33, SECTION 3304.5. FIRE WATCH SHALL REMAIN IN EFFECT UNTIL EXISTING FIRE PROTECTION SYSTEMS ARE RETURNED TO SERVICE OR AS ALLOWED BY THE BUILDING OFFICIAL.

7. PENETRATIONS TO FIRE RATED MATERIALS OR ASSEMBLIES SHALL BE RESTORED TO EQUAL RATING. FIRE STOP SYSTEMS AS LISTED BY UNDERWRITERS LABORATORIES SHALL BE INSTALLED PER FIRE RESISTANCE DIRECTORY. FIRE STOP SYSTEMS SHALL BE AS SPECIFIED.

8. NONRESIDENTIAL ENERGY STANDARDS COMPLIANCE STATEMENT (TITLE 24, PART 6):

   THE DESIGN INDICATED HEREIN COMPLIES WITH THE REQUIREMENTS OF THE ENERGY CONSERVATION STANDARDS OF TITLE 24, PART 6, CALIFORNIA CODE OF REGULATIONS. THE PROPOSED BUILDING(S) WILL BE IN COMPLIANCE WITH THE ENERGY CONSERVATION STANDARDS PROVIDED IT (THEY) IS (ARE) BUILT ACCORDING TO THESE DRAWINGS AND SPECIFICATIONS AND PROVIDED ANY FUTURE IMPROVEMENTS ARE COMPLETED ACCORDING TO THE REQUIREMENTS OF TITLE 24, PART 6, CALIFORNIA CODE OF REGULATIONS. THESE PLANS AND SPECIFICATIONS HAVE BEEN PREPARED TO INCLUDE ALL SIGNIFICANT ENERGY CONSERVATION FEATURES REQUIRED FOR COMPLIANCE WITH THE STANDARDS. BUILDING AREAS THAT ARE UNCONDITIONED AND/OR NOT SUBJECT TO THE STANDARDS ARE INDICATED ON THE PLANS.

8. (CONT) ENVELOPE MANDATORY MEASURES:

   A. INSTALLED INSULATING MATERIALS SHALL HAVE BEEN CERTIFIED BY THE MANUFACTURER TO COMPLY WITH THE CALIFORNIA QUALITY STANDARDS FOR INSULATING MATERIAL.

   B. ALL INSULATING MATERIALS SHALL BE INSTALLED IN COMPLIANCE WITH THE FLAME SPREAD RATING AND SMOKE DENSITY REQUIREMENTS OF TITLE 24, PART 2, CALIFORNIA CODE OF REGULATIONS, SECTIONS 720 AND 2603.

   C. ALL EXTERIOR JOINTS AND OPENINGS IN THE BUILDING ENVELOPE THAT ARE POTENTIAL AND OBSERVABLE SOURCES OF AIR LEAKAGE SHALL BE CAULKED, GASKETED, WEATHERSTRIPPED OR OTHERWISE SEALED.

   D. SITE CONSTRUCTED DOORS, WINDOWS, AND SKYLIGHTS SHALL BE CAULKED BETWEEN THE UNIT AND THE BUILDING, AND SHALL BE WEATHERSTRIPPED (EXCEPT FOR UNFRAMED GLASS DOORS AND FIRE DOORS).

   E. MANUFACTURED DOORS AND WINDOWS INSTALLED SHALL HAVE AIR INFILTRATION RATES CERTIFIED BY THE MANUFACTURER IN ACCORDANCE WITH TITLE 24, PART 6, CALIFORNIA CODE OF REGULATIONS, SECTION 110.6.

   F. MANUFACTURED FENESTRATION PRODUCTS IN THE ENVELOPE OF THE BUILDING, INCLUDING, BUT NOT LIMITED TO, WINDOWS, SLIDING GLASS DOORS, FRENCH DOORS, SKYLIGHTS, CURTAIN WALLS, AND GARDEN WINDOWS MUST BE LABELED FOR U-VALUE IN ACCORDANCE WITH THE (NFRC) NATIONAL FENESTRATION RATING COUNCIL'S INTERIM U-VALUE RATING PROCEDURE.

   G. DEMISING WALL INSULATION SHALL BE INSTALLED IN ALL OPAQUE PORTIONS OF FRAMED WALLS (EXCEPT DOORS).

9. PROOF LOAD TESTS FOR EXPANSION TYPE ANCHOR BOLTS:

   A. ANCHOR DIAMETER REFERS TO THE THREAD SIZE FOR THE WEDGE CATEGORY ANCHOR.

   B. APPLY PROOF TEST LOADS TO WEDGE ANCHORS WITHOUT REMOVING THE NUT IF POSSIBLE. IF NOT, REMOVE NUT AND INSTALL A THREADED COUPLER TO THE SAME TIGHTNESS OF THE ORIGINAL NUT USING A TORQUE WRENCH AND APPLY LOAD.

   C. REACTION LOADS FROM TEST FIXTURES MAY BE APPLIED CLOSE TO THE ANCHOR BEING TESTED, PROVIDED THE ANCHOR IS NOT RESTRAINED FROM WITHDRAWING BY THE FIXTURE(S).

   D. TEST EQUIPMENT IS TO BE CALIBRATED BY AN APPROVED TESTING LABORATORY IN ACCORDANCE WITH STANDARD RECOGNIZED PROCEDURES.

   E. THE FOLLOWING CRITERIA APPLY FOR THE ACCEPTANCE OF INSTALLED ANCHORS:

   1. HYDRAULIC RAM METHOD: THE ANCHOR SHOULD HAVE NO OBSERVABLE MOVEMENT AT THE APPLICABLE TEST LOAD. FOR WEDGE TYPE ANCHORS, A PRACTICAL WAY TO DETERMINE OBSERVABLE MOVEMENT IS THAT THE WASHER UNDER THE NUT BECOMES LOOSE. DROP IN ANCHORS ARE ONLY TO BE TESTED WITH THIS METHOD.

   2. TORQUE WRENCH METHOD: THE APPLICABLE TEST TORQUE MUST BE REACHED WITHIN THE FOLLOWING LIMITS FOR WEDGE ANCHORS: ONE-HALF (1/2) TURN OF THE NUT.

   3. IF MANUFACTURERS TORQUE IS LESS THAN SPECIFIED TEST TORQUE THE MANUFACTURERS LISTED TORQUE SHALL BE USED FOR TESTING.

   H. TESTING SHOULD OCCUR 24 HOURS MINIMUM AFTER INSTALLATION OF THE SUBJECT ANCHORS

   I. ALL EXPANSION TYPE ANCHOR BOLTS USED FOR STRUCTURAL APPLICATIONS SHALL BE TESTED. ALL ANCHOR BOLTS OF THE EXPANSION TYPE USED FOR NON STRUCTURAL APPLICATIONS (LOADED IN EITHER PULLOUT OR SHEAR) SHALL HAVE 50 PERCENT OF THE BOLTS (ALTERNATE BOLTS IN ANY GROUP ARRANGEMENT ALLOWED BY THE TYPE OF SUBSTRATE AND DIAMETER OF BOLT LISTED BELOW UNDER TEST VALUES TABLE) PROOF TESTED IN TENSION TO TWICE THE ALLOWABLE TENSION LOAD. IF THERE ARE ANY FAILURES, THE IMMEDIATELY ADJACENT BOLTS MUST THEN ALSO BE TESTED. TESTING SHALL BE PERFORMED IN ACCORDANCE WITH TITLE 24, PART 2, SECTION 1910A.5

   J. ALL BOLTS MUST HAVE ICC/ES APPROVAL.

   A. ALL ANCHOR BOLTS OF THE EXPANSION TYPE INSTALLED IN CONCRETE SHALL BE ONE OF THE FOLLOWING:

   1. ITW RAMSET/REDHEAD-WEDGE ANCHOR-ICC/ES NO. 2427
   2. HILTI, INC.- QWIK BOLT TZ -WEDGE ANCHOR-ICC/ES NO. 1917
   3. SIMPSON - STRONGBOLT 2 - WEDGE ANCHOR - ICC/ES NO. 3037

MIMIMUM TEST VALUES
NORMALWEIGHT OR LIGHTWEIGHT CONCRETE

ANCHOR		WEDGE		---		
DIA. (IN)	TENSION LOAD (LBS)	TORQUE (FT-LBS)	EMBED MENT (IN)	---	---	---
---	---	---	---	---	---	---
3/8	1,100	25	2	---	---	---
1/2	2,000	50	3-1/4	---	---	---
5/8	2,300	80	4-1/4	---	---	---
3/4	3,700	150	4-3/4	---	---	---

   B. ALL ANCHOR BOLTS OF THE EXPANSION TYPE INSTALLED IN GROUT FILLED MASONRY SHALL BE ONE OF THE FOLLOWING:

   1. HILTI, INC.-KWIK BOLT III-WEDGE ANCHOR-ICC/ES NO. 1385
   2. SIMPSON-STRONGBOLT 2-WEDGE ANCHOR-IAMPO NO. ER-240

MIMIMUM TEST VALUES
GROUT FILLED CONCRETE MASONRY

ANCHOR		WEDGE		---		
DIA. (IN)	TENSION LOAD (LBS)	TORQUE (FT-LBS)	EMBED MENT (IN)	---	---	---
1/4	1,080	4	2	---	---	---
3/8	1,564	15	2-1/2	---	---	---
1/2	1,810	25	3-1/2	---	---	---
5/8	2,484	65	4	---	---	---
3/4	3,290	120	4-3/8	---	---	---

11. POWDER DRIVEN CONCRETE FASTENERS:

   A. GENERAL: USE OF POWDER DRIVEN CONCRETE FASTENERS FOR TENSION LOADS IS LIMITED TO SUPPORT OF MINOR LOADS LIKE ACOUSTICAL CEILINGS, DUCT WORK, CONDUIT.

   B. ALLOWABLE LOADS: IN GENERAL, LOADS SHOULD BE LIMITED TO LESS THAN 100 POUNDS. HOWEVER, GREATER LOADS MAY BE PERMITTED FOR SPECIAL CASES WHEN APPROVED BY THE CHECKING SUPERVISOR OR FIELD ENGINEER.

   C. TESTING: THE OPERATOR, TOOL, AND FASTENER SHALL BE PREQUALIFIED BY THE PROJECT INSPECTOR. HE SHALL OBSERVE THE TESTING OF THE FIRST 10 FASTENER INSTALLATIONS. A TEST "PULL-OUT" LOAD OF NOT LESS THAN TWICE THE DESIGN LOAD, OR 200 POUNDS, WHICHEVER IS GREATER SHALL BE APPLIED TO THE PIN IN SUCH A MANNER AS NOT TO RESIST THE SPALLING TENDENCY OF THE CONCRETE AROUND THE PIN. THEREAFTER, RANDOM TESTS UNDER THE PROJECT INSPECTOR'S SUPERVISION SHALL BE MADE OF APPROXIMATELY 1 IN 10 PINS, EXCEPT THAT WHEN THE DESIGN LOAD EXCEEDS 100 POUNDS, ONE HALF OF THE PINS SHALL BE TESTED. SHOULD FAILURE OCCUR ON ANY PIN TESTED, ALL INSTALLATIONS MUST BE TESTED AND UNFAIR PINS REPLACED.

   D. ALL POWDER DRIVEN CONCRETE FASTENERS SHALL BE ONE OF THE FOLLOWING:

   1. HILTI, INC.
      X-CP 72 PINS - WOOD PLATE - ICC/ES NO. 2379
      X-U PINS - STEEL TRACK - ICC/ES NO. 2269
   2.. ITW RAMSET/REDHEAD
      DRIVE PIN - WOOD PLATE - ICC/ES NO. 2690
      DRIVE PIN - STEEL TRACK - ICC/ES NO. 1799
   3. SIMPSON STRONG-TIE CO., INC.
      PDPWL-300MG - WOOD PLATE - ICC/ES NO. 2138
      PDPA-125- STEEL TRACK - ICC/ES NO. 2138

I find that: ☒ All drawings or sheets listed on the cover or index sheet ☐ This drawing or page

☒ is/are in general conformance with the project design intent, and ☒ has/have been coordinated with the project plans and specifications.	☐ is/are in general conformance with the project design intent, and ☐ has/have been coordinated with the project plans and specifications.
Signature: Mark Graham — Date: 03/06/18	Signature — Date
Architect or Engineer designated to be in general responsible charge	Architect or Engineer delegated responsibility for this portion of the work
Print Name: MARK GRAHAM	Print Name
License Number: C-26046 — Expiration Date: 03/31/18	License Number — Expiration Date

12. INSPECTOR OF RECORD REQUIREMENTS

   A. ONE OR MORE INSPECTORS EMPLOYED BY THE OWNER IN ACCORDANCE WITH THE REQUIREMENTS OF TITLE 24 OF THE CALIFORNIA CODE OF REGULATIONS WILL BE ASSIGNED TO THE WORK. THE INSPECTORS DUTIES ARE SPECIFICALLY DEFINED IN SECTION 4-342 OF SAID TITLE 24, PART 1 AND IN ADDITION SHALL BE AS STIPULATED IN INTERPRETATION OF REGULATION DOCUMENT IR A-8.

   B. INSPECTOR SHALL BE CERTIFIED AS A CLASS 3 INSPECTOR THROUGH THE DIVISION OF THE STATE ARCHITECT INSPECTOR EXAMINATION PROGRAM. INSPECTOR SHALL ALSO BE SPECIFICALLY APPROVED BY THE DIVISION OF THE STATE ARCHITECT FOR THIS PROJECT AT LEAST 10 DAYS PRIOR TO THE START OF ANY WORK FOR THIS PROJECT.

14. ALL WORK SHOWN ON THESE DRAWINGS SHALL COMPLY WITH THE REQUIREMENTS OF TITLE 24, CALIFORNIA CODE OF REGULATIONS (CCR).

15. CHANGES TO THE APPROVED DRAWINGS AND SPECIFICATIONS SHALL BE MADE BY AN ADDENDUM OR A CONSTRUCTION CHANGE DOCUMENT APPROVED BY THE DIVISION OF THE STATE ARCHITECT, AS REQUIRED BY TITLE 24, CCR, PART 1, SECTION 4-338.

16. THE INTENT OF THESE DRAWINGS AND SPECIFICATIONS IS THAT THE WORK OF THE ADDITION, ALTERATION OR RECONSTRUCTION IS IN COMPLIANCE WITH THE REQUIREMENTS OF TITLE 24, CALIFORNIA CODE OF REGULATIONS. SHOULD ANY CONDITIONS SUCH AS DETERIORATION OR NON-COMPLYING CONSTRUCTION BE DISCOVERED WHICH IS NOT IDENTIFIED BY THE CONTRACT DOCUMENTS WHEREIN THE FINAL WORK WOULD NOT COMPLY WITH THE REQUIREMENTS OF TITLE 24, CALIFORNIA CODE OF REGULATIONS, THE CONTRACTOR SHALL IMMEDIATELY NOTIFY THE OWNER AND THE ARCHITECT OF THE CONDITION IN WRITING. NECESSARY INFORMATION REQUIRED TO CORRECT THE CONDITIONS ENCOUNTERED WILL BE ISSUED BY THE ARCHITECT. A CHANGE ORDER MAY BE ISSUED TO ADJUST THE CONTRACT SUM OR TIME COMMENSURATE WITH THE AMOUNT OF ADDITIONAL WORK REQUIRED IF ANY. A CONSTRUCTION CHANGE DOCUMENT SHALL BE APPROVED BY THE DIVISION OF THE STATE ARCHITECT PRIOR TO PROCEEDING WITH THE WORK REQUIRED BY THE CHANGE ORDER.

17. DSA ACCEPTED TESTING LABORATORY DIRECTLY EMPLOYED BY THE DISTRICT (OWNER) SHALL CONDUCT ALL REQUIRED TEST AND INSPECTIONS FOR THE PROJECT.

PROJECT TEAM

PROJECT ADDRESS
LONGFELLOW ELEMENTARY SCHOOL
1101 S. DWIGHT STREET
COMPTON, CA 90220
PHONE: 310-898-6460

OWNER
COMPTON UNIFIED SCHOOL DISTRICT
501 S SANTA FE AVENUE
COMPTON, CA 90221
PHONE: 310-604-6507 FAX: 310-763-0105

ARCHITECT
WLC ARCHITECTS, INC.
8163 ROCHESTER AVENUE., SUITE 100
RANCHO CUCAMONGA, CA 91730
PHONE: 909-987-0909 FAX: 909-980-9980

MECHANICAL ENGINEER
OED
5200 E LA PALMA AVE
ANAHEIM, CA 92807
PHONE: 714-693-2277

ELECTRICAL ENGINEER
A&F ENGINEERING GROUP, INC.
9320 BASELINE RD., SUITE C
RANCHO CUCAMONGA, CA 91701
PHONE: 909-941-3008 FAX: 909-941-8211

SCOPE OF WORK DESCRIPTION

THE SCOPE OF THE WORK AS STATED BELOW IS FOR DSA PLAN REVIEW PURPOSES ONLY AND DOES NOT CONSTITUTE A DETAILED AND FULL EXPLANATION OF THE REQUIREMENTS OF THE CONTRACT DOCUMENTS.

REPLACE (1) EXISTING ROOF MOUNTED HVAC UNIT AT ADMINISTRATION BUILDING A AND (5) EXISTING FLOOR MOUNTED HVAC UNITS AT CLASSROOM BUILDINGS C, D, F, G AND K WITH NEW PACKAGE HVAC UNITS, AND MODIFY (1) EXISTING FLOOR MOUNTED HVAC UNIT AT CLASSROOM BUILDING E AND SITE WORKS.

VICINITY MAP

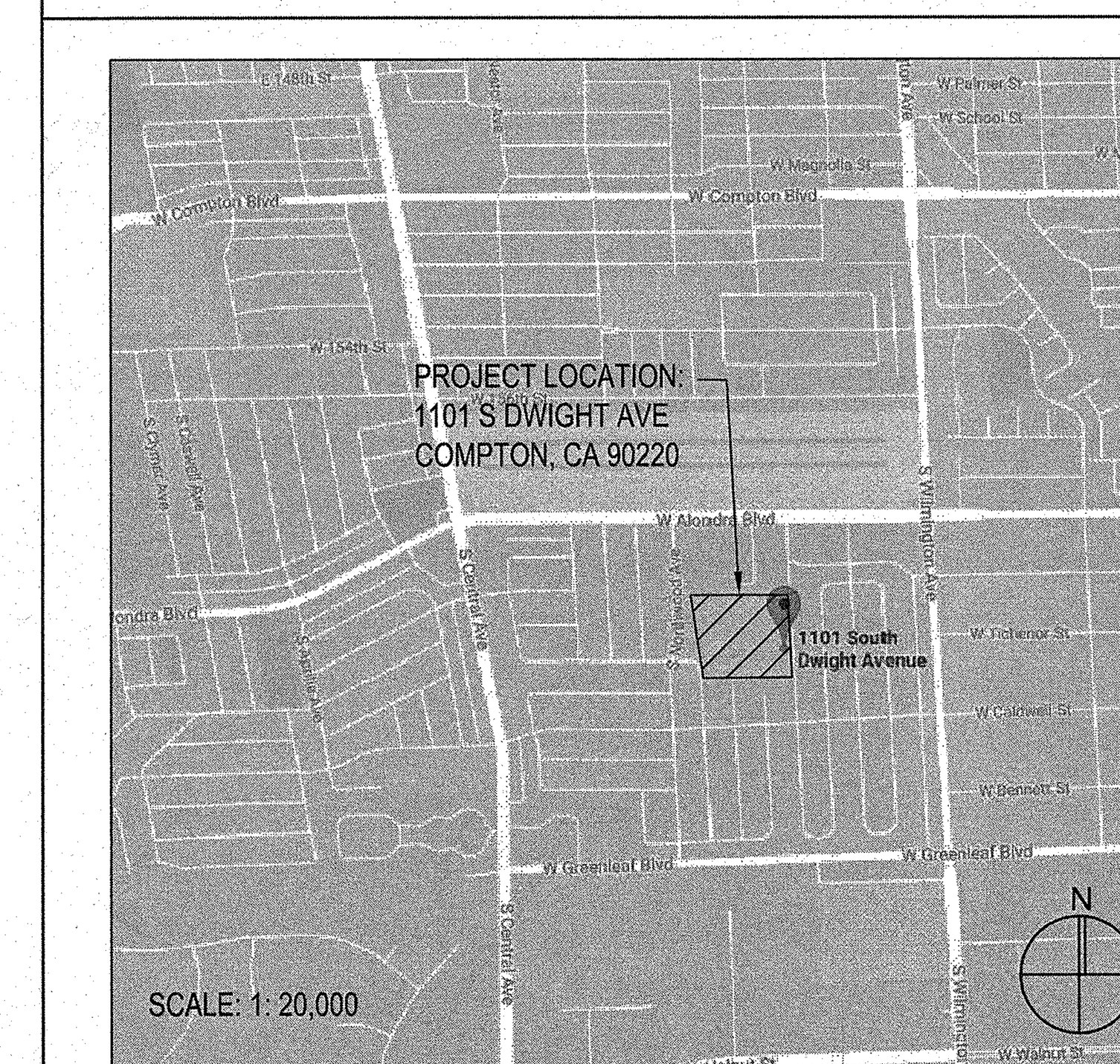

SHEET INDEX

DRAWING REF NO	DESCRIPTION
ARCHITECTURAL	
A0.1	GENERAL NOTE AND PROJECT DIRECTORY
A0.2	ARCHITECTURAL DRAWINGS ABBREVIATIONS AND GOVERNING CODE
A1.0	SITE PLAN AND BUILDING A DEMO AND NEW ROOF PLANS
A2.1	BUILDING C AND D ENLARGED DEMO AND NEW FLOOR PLANS
A2.2	BUILDING F AND G ENLARGED DEMO AND NEW FLOOR PLANS
A2.3	BUILDING K ENLARGED DEMO AND NEW FLOOR PLANS AND DETAILS
A3.1	BUILDING K ENLARGED DEMO AND NEW REFLECTED CEILING PLANS
STRUCTURAL	
S1.0	GENERAL NOTE AND DETAILS
S1.1	DETAILS
S1.2	DETAILS
S2.1	BUILDING C, D, E, F, G AND K PARTIAL FLOOR PLANS
MECHANICAL	
M-0.1	MECHANICAL GENERAL NOTE AND LEGEND
M-0.2	MECHANICAL SCHEDULES
M-2.0	BUILDING A DEMOLITION AND REMODEL FLOOR PLANS
M-2.1	BUILDING C DEMOLITION AND REMODEL FLOOR PLANS
M-2.2	BUILDING D DEMOLITION AND REMODEL FLOOR PLANS
M-2.3	BUILDING E DEMOLITION AND REMODEL FLOOR PLANS
M-2.4	BUILDING F DEMOLITION AND REMODEL FLOOR PLANS
M-2.5	BUILDING G DEMOLITION AND REMODEL FLOOR PLANS
M-2.6	BUILDING K DEMOLITION AND REMODEL FLOOR PLANS
M-3.1	MECHANICAL SECTIONS
M-4.1	MECHANICAL DETAILS
M-4.3	MECHANICAL DETAILS
M-4.4	MECHANICAL DETAILS
M-5.1	WIRING DIAGRAM DETAILS
M-5.2	WIRING DIAGRAM DETAILS
M-5.3	WIRING DIAGRAM DETAILS
M-5.4	WIRING DIAGRAM DETAILS
M-5.5	WIRING DIAGRAM DETAILS
M-6.0	TITLE 24 BUILDING A
M-6.1	TITLE 24 BUILDING C
M-6.2	TITLE 24 BUILDING D
M-6.3	TITLE 24 BUILDING E
M-6.4	TITLE 24 BUILDING F
M-6.5	TITLE 24 BUILDING G
M-6.6	TITLE 24 BUILDING K
ELECTRICAL	
E0.1	GENERAL NOTES SYMBOL LIST & DETAILS
E0.2	DEMOLITION AND REMODEL SINGLE LINE DIAGRAM
E0.3	PANEL SCHEDULES
E1.0	SITE PLAN
E2.1	BUILDING C DEMOLITION AND REMODEL PLANS
E2.2	BUILDING D DEMOLITION AND REMODEL PLANS
E2.3	BUILDING E DEMOLITION AND REMODEL PLANS
E2.4	BUILDING F DEMOLITION AND REMODEL PLANS
E2.5	BUILDING G DEMOLITION AND REMODEL PLANS
E2.6	BUILDING K DEMOLITION AND REMODEL PLANS

WLC ARCHITECTS
CLIENT FOCUSED • PASSION DRIVEN
SOUTHERN CALIFORNIA
8163 ROCHESTER AVENUE, SUITE 100
RANCHO CUCAMONGA
CALIFORNIA 91730-0729
TEL: 909-987-0909
www.wlcarchitects.com

LONGFELLOW ELEMENTARY SCHOOL
HVAC REPLACEMENT
COMPTON UNIFIED SCHOOL DISTRICT
1101 S DWIGHT AVE.
COMPTON, CA 90220

LICENSED ARCHITECT — MARK GRAHAM — C-26046 — 03-31-19 — STATE OF CALIFORNIA

CONSULTANT

IDENTIFICATION STAMP
DIV. OF THE STATE ARCHITECT
OFFICE OF REGULATION SERVICES
APPL 03-118423
AC — FLS SS EY
DATE MAR 0 8 2018
FILE: 19-23
46 SHEETS TOTAL + DSA 103 + SPECS

NO	DATE	BY	DESCRIPTION
#	REVISIONS		

DRAWN:	CHECKED:
DATE: 3/6/2018	SCALE:
PROJECT NUMBER: 1723400	

GENERAL NOTES & PROJECT DIRECTORY

DRAWING NUMBER: A0.1

ARCHITECTURAL DRAWING ABBREVIATIONS

SYMBOLS

&	AND
∠	ANGLE
@	AT
CL	CENTERLINE
⊏	CHANNEL
ø	DIAMETER OR ROUND
(E)	EXISTING
(N)	NEW
d	PENNY (NAILS)
⊥	PERPENDICULAR
PL	PLATE
#	POUND OR NUMBER

A/C	AIR CONDITIONING
A/E	ARCHITECT/ENGINEER
AB	ANCHOR BOLT
ABAN	ABANDON
ABC	AGGREGATE BASE COURSE
ABV	ABOVE
AC	ASPHALTIC CONCRETE
ACC	ACCESS(IBLE)
ACST	ACOUSTICAL
ACT	ACOUSTICAL CEILING TILE
AD	AREA DRAIN
ADDM	ADDENDUM
ADH	ADHESIVE
ADJ	ADJUSTABLE
ADJC	ADJACENT
AFF	ABOVE FINISHED FLOOR
AFG	ABOVE FINISHED GRADE
AGGR	AGGREGATE
AHU	AIR HANDLING UNIT
AL	ALUMINUM
ALT	ALTERNATE
ANC	ANCHOR, ANCHORAGE
APLD	APPLIED
APPRX	APPROXIMATE
ARCH	ARCHITECT(URAL)
ASC	ABOVE SUSPENDED CEILING
ASPH	ASPHALT
ASSY	ASSEMBLY
ASYM	ASYMMETRICAL
AWG	AMERICAN WIRE GAGE

BC	BACK OF CURB
BD	BOARD
BITUM	BITUMINOUS
BLDG	BUILDING
BLK	BLOCK
BLKG	BLOCKING
BLW CLG	BELOW CEILING
BLW FFLR	BELOW FINISH FLOOR
BLW	BELOW
BM	BENCH MARK
BN	BOUNDARY NAILING
BOT	BOTTOM
BRCG	BRACING
BRDG	BRIDGING
BRG	BEARING
BRK	BRICK
BRKT	BRACKET
BRS	BRASS
BRZ	BRONZE
BS	BOTH SIDES
BSMT	BASEMENT
BTWN	BETWEEN
BUR	BUILT UP ROOFING
BW	BOTH WAYS

C&G	CURB AND GUTTER
CAB	CABINET
CAD	CADMIUM
CB	CATCH BASIN
CBB	CEMENTITIOUS BACKER BOARD
CEM	CEMENT
CER	CERAMIC
CFCI	CONTRACTOR FURNISH CONTRACTOR INSTALLED
CFLG	COUNTERFLASHING
CFOI	CONTRACTOR FURNISH OWNER INSTALLED
CG	CORNER GUARD
CHBD	CHALKBOARD
CHFR	CHAMFER
CI	CAST IRON
CIR	CIRCLE
CIRC	CIRCULAR, CIRCUMFERENCE
CJ	CONSTRUCTION JOINT
CL	CHAIN LINK
CLG	CEILING
CLJ	CONTROL JOINT
CLL	CONTRACT LIMIT LINE
CLOS	CLOSURE
CLR	CLEAR(ANCE)
CLRM	CLASSROOM
CMPST	COMPOSITION
CMU	CONCRETE MASONRY UNIT
CNCL	CONCEALED
CNR	CORNER
CNTR	COUNTER
COL	COLUMN
COM	COMMON
COMB	COMBINATION
COMPT	COMPARTMENT
CONC	CONCRETE
CONF	CONFERENCE
CONN	CONNECTION
CONSTR	CONSTRUCTION
CONT	CONTINUOUS (ATION)
CONTR	CONTRACT(OR)
COORD	COORDINATE
CORR	CORRIDOR
CPR	COPPER
CPRS	COMPRESS(ED), (ION), (IBLE)
CPT	CARPET(ED)
CRS	COLD ROLLED STEEL
CS	CAST STONE
CSG	CASING
CSK	COUNTERSUNK
CSMT	CASEMENT
CSWK	CASEWORK
CT	CERAMIC TILE
CTB	CERAMIC TILE BASE
CTF	CERAMIC TILE FLOOR
CTG	COATING
CTR	CENTER

CUFT	CUBIC FOOT
CUIN	CUBIC INCH
CUST	CUSTODIAN
CUYD	CUBIC YARD

D	DRAIN
DA	DOUBLEACTING
DBL	DOUBLE
DEMO	DEMOLISH, DEMOLITION
DEP	DEPRESSED
DEPT	DEPARTMENT
DET	DETAIL
DF	DRINKING FOUNTAIN
DH	DOUBLE HUNG
DIA	DIAMETER
DIAG	DIAGONAL
DIFF	DIFFUSER
DIM	DIMENSION
DISP	DISPENSER
DIV	DIVISION
DMPF	DAMPPROOFING
DMT	DEMOUNTABLE
DN	DOWN
DR	DOOR
DRB	DRAINBOARD
DRLV	DOOR LOUVER
DS	DOWNSPOUT
DSP	DRY STANDPIPE
DT	DRAIN TILE
DVTL	DOVETAIL
DW	DISHWASHER
DWG	DRAWING
DWL	DOWEL
DWR	DRAWER

E	EAST
EA	EACH
EAR	EXHAUST AIR REGISTER
EB	EXPANSION BOLT
EE	EACH END
EF	EACH FACE
EFS	EXTERIOR FINISH SYSTEM
EHD	ELECTRIC HAND DRYER
EIFS	EXTERIOR INSULATION AND FINISH SYSTEM
EJ	EXPANSION JOINT
EL	ELEVATION
ELAST	ELASTOMERIC
ELEC	ELECTRIC(AL)
ELEV	ELEVATOR
EM	EXPANDED METAL
EMER	EMER EMERGENCY
EN	EDGE NAILING
ENCL	ENCLOSE(URE)
ENGR	ENGINEER
ENTR	ENTRANCE
EP	ELECTRICAL PANELBOARD
EQ	EQUAL
EQUIP	EQUIPMENT
ESC	ESCUTCHEON
ESCL	ESCALATOR
ESMT	EASEMENT
EW	EACH WAY
EWC	ELECTRIC WATER COOLER
EWH	ELECTRICAL WATER HEATER
EWS	EYE WASH STATION
EXC	EXCAVATE
EXG	EXISTING
EXH	EXHAUST
EXP	EXPOSED
EXPN	EXPANSION
EXS	EXTRA STRONG
EXT	EXTERIOR

F/F	FACE TO FACE
FA	FIRE ALARM
FAB	FABRIC
FBD	FIBERBOARD
FBRK	FIRE BRICK
FCBRK	FACE BRICK
FD	FLOOR DRAIN
FDTN	FOUNDATION
FE	FIRE EXTINGUISHER
FEC	FIRE EXTINGUISHER CABINET
FFA	FROM FLOOR ABOVE
FFB	FROM FLOOR BELOW
FFEL	FINISHED FLOOR ELEVATION
FFL	FINISHED FLOOR LINE
FGL	FIBERGLASS
FHC	FIRE HOSE CABINET
FHMS	FLATHEAD MACHINE SCREW
FHWS	FLATHEAD WOOD SCREW
FIN	FINISH(ED)
FJT	FLUSH JOINT
FLASH	FLASH(ING)
FLDG	FOLDING
FLG	FLOORING
FLR	FLOOR
FLUOR	FLUORESCENT
FN	FIELD NAILING
FOC	FACE OF CONCRETE
FOF	FACE OF FINISH
FOG	FACE OF GRID
FOM	FACE OF MASONRY
FOS	FACE OF STUDS
FPL	FIREPLACE
FPRF	FIREPROOF(ING)
FR	FRAME(D), (ING)
FRG	FIBER REINFORCED GYPSUM
FRGL	FIRE RESISTIVE GLAZING
FRP	FIBERGLASS REINFORCED PLASTIC
FRTD	FIRE RATED
FRTW	FIRE RETARDANT TREATED WOOD
FRZ	FREEZER
FS	FAR SIDE
FSTN	FASTEN, FASTENER
FT	FOOT OR FEET
FTG	FOOTING
FURG	FURRED (ING)
FUT	FUTURE
FWC	FABRIC WALL COVERING

GA	GAGE
GAL	GALLON
GALV	GALVANIZED
GB	GRAB BAR
GFRC	GLASS FIBER REINFORCED CONCRETE
GI	GALVANIZED IRON
GL	GLASS
GLU LAM	GLUE LAMINATED
GLZ	GLAZING
GLZCMU	GLAZED CONCRETE MASONRY UNITS
GND	GROUND
GPC	GYPSUM PLASTER CEILING
GR LN	GRADE LINE
GR BM	GRADE BEAM
GR	GRADE, (ING)
GRBD	GARBAGE DISPOSER
GSB	GYPSUM SHEATHING BOARD
GSS	GALVANIZED STEEL SHEET
GST	GLAZED STRUCTURAL TILE
GT	GROUT
GVL	GRAVEL
GYP	GYPSUM

HB	HOSE BIBB
HC	HOLLOW CORE
HD	HEAVY DUTY
HD JT	HEAD JOINT
HDAS	HEADED ANCHOR STUD
HDR	HEADER
HDW	HARDWARE
HDWD	HARDWOOD
HEX	HEXAGONAL
HGR	HANGER
HLDN	HOLD DOWN
HM	HOLLOW METAL
HMD	HOLLOW METAL DOOR
HMDF	HOLLOW METAL DOOR AND FRAME
HMF	HOLLOW METAL FRAME
HNDRL	HANDRAIL
HORIZ	HORIZONTAL
HPT	HIGH POINT
HR	HOUR
HT	HEIGHT
HTG	HEATING
HVAC	HEATING/VENTILATING/ AIR CONDITIONING
HWH	HOT WATER HEATER

ID	INSIDE DIAMETER
INCL	INCLUDE(D), (ING)
INSTL	INSTALL
INSUL	INSULATE(D), (ION)
INT	INTERIOR
INV	INVERT
IPS	IRON PIPE SIZE

JAN	JANITOR
JST	JOIST
JT	JOINT

KIT	KITCHEN
KO	KNOCKOUT
KPL	KICKPLATE

LAB	LABORATORY
LAD	LADDER
LAM	LAMINATE(D)
LAV	LAVATORY
LBL	LABEL
LBR	LUMBER
LBS	POUND
LCT	LINOLEUM COMPSITE TILE
LDR	LEADER
LG	LENGTH
LH	LEFT HAND
LHR	LEFT HAND REVERSE
LKNT	LOCKNUT
LKR	LOCKER
LKWASH	LOCKWASHER
LLH	LONG LEG HORIZONTAL
LLV	LONG LEG VERTICAL
LMST	LIMESTONE
LNDSCP	LANDSCAPE(D)
LNTL	LINTEL
LP	LIGHTPROOF
LPT	LOW POINT
LT	LIGHT
LTWT	LIGHT WEIGHT
LVL	LEVEL(ER)
LVR	LOUVER
LW	LIGHTWEIGHT CONCRETE
LWIC	LIGHTWEIGHT INSULATING CONCRETE

MAINT	MAINTAIN(ANCE)
MAS	MASONRY
MATL	MATERIAL
MAX	MAXIMUM
MB	MACHINE BOLT
MBR	MEMBER
MC	MEDICINE CABINET
MCB	METAL CORNER BEAD
MDO	MEDIUM DENSITY OVERLAID
MECH	MECHANICAL
MED	MEDIUM
MEMB	MEMBRANE
MEZZ	MEZZANINE
MFD	METAL FLOOR DECKING
MFR	MANUFACTURE(ER)
MH	MANHOLE
MIN	MINIMUM
MIRR	MIRROR
MISC	MISCELLANEOUS
ML	METAL LATH
MLDG	MOLDING
MLWK	MILLWORK
MO	MASONRY OPENING
MOD	MODULE (AR)
MR	MOISTURE RESISTANT
MRB	MARBLE
MRD	METAL ROOF DECKING
MS	MACHINE SCREW
MTD	MOUNTED
MTL	METAL

MTR	MORTAR
MULL	MULLION
MVBL	MOVABLE
MWP	MEMBRANE WATER PROOFING
N	NORTH
NA	NOT APPLICABLE
NAT	NATURAL
NCOMBL	NONCOMBUSTIBLE
NE	NOT EXCEEDING
NF	NEAR FACE
NIC	NOT IN CONTRACT
NLB	NON-LOAD BEARING
NM	NONMETALLIC
NO	NUMBER
NOM	NOMINAL
NR	NOISE REDUCTION
NRC	NOISE REDUCTION COEFFICIENT
NRCA	NATIONAL ROOFING CONTRACTORS ASSOCIATION
NS	NEAR SIDE
NTS	NOT TO SCALE

O/O	OUT TO OUT
OA	OVERALL
OBS	OBSCURE
OC	ON CENTER(S)
OD	OUTSIDE DIAMETER
OFCI	OWNER FURNISHED - CONTRACTOR INSTALLED
OFF	OFFICE
OFOI	OWNER FURNISHED - OWNER INSTALLED
OFS	OUTSIDE FACE OF STUD
OHMS	OVALHEAD MACHINE SCREW
OHWS	OVALHEAD WOOD SCREW
OPH	OPPOSITE HAND
OPNG	OPENING
OPP	OPPOSITE
OPQ	OPAQUE
OPR	OPERABLE
ORD	OVERFLOW ROOF DRAIN
OVFL	OVERFLOW
OVHD	OVERHEAD

PAR	PARALLEL
PAT	PATTERN
PB	PANIC BAR
PBD	PARTICLE BOARD
PC	PORTLAND CEMENT
PCC	PRECAST CONCRETE
PCP	PORTLAND CEMENT PLASTER
PED	PEDESTAL
PERF	PERFORATE(D)
PERIM	PERIMETER
PERP	PERPENDICULAR
PGBD	PEGBOARD
PH	PHASE
PHS	PHILLIPS HEAD SCREW
PI	POINT OF INTERSECTION
PIV	POST INDICATOR VALVE
PL	PROPERTY LINE
PLAM	PLASTIC LAMINATE
PLAS	PLASTER
PLBG	PLUMBING
PLYWD	PLYWOOD
PNEU	PNEUMATIC
PNL	PANEL
PNT	PAINT(ED)
POL	POLISHED
POLY	POLYETHYLENE
PORC	PORCELAIN
PORT	PORTABLE
PR	PAIR
PRCST	PRECAST
PREFAB	PREFABRICATE(D)
PREFIN	PREFINISHED
PREFMD	PREFORMED
PRKG	PARKING
PRML	PREMOLDED
PROJ	PROJECT
PROP	PROPERTY
PSCONC	PRESTRESSED CONCRETE
PT	POINT
PTCONC	POST TENSIONED CONCRETE
PTD	PAPER TOWEL DISPENSER
PTN	PARTITION
PTR	PAPER TOWEL RECEPTOR
PVC	POLYVINYL CHLORIDE
PVG	PAVE(D), (ING)
PVMT	PAVEMENT

QT	QUARRY TILE
QTB	QUARRY TILE BASE
QTF	QUARRY TILE FLOOR
QTR	QUARTER
QTY	QUANTITY

R	RISER
RA	RETURN AIR
RAB	RABBET
RAD	RADIUS
RB	RESILIENT BASE
RBR	RUBBER
RCP	REINFORCED CONCRETE PIPE
RCVR	RECEIVER
RD	ROOF DRAIN
RDGINS	RIGID INSULATION
RDWY	ROADWAY
REBAR	REINFORCING STEEL BARS
REC	RECESSED
RECT	RETANGULAR
REF	REFERENCE
REFL	REFLECT(ED), (IVE), (OR)
REFR	REFRIGERATOR
REG	REGISTER
REINF	REINFORCE(D), (ING), (MENT)
REM	REMOVE(ABLE)
REP	REPAIR
REPL	REPLACE
REQD	REQUIRED
RESIL	RESILIENT
RET	RETURN
REV	REVISION(S), REVISED
RF	RESILIENT FLOORING
RFG	ROOFING
RFH	ROOF HATCH
RH	RIGHT HAND
RHMS	ROUND HEAD MACHINE SCREW
RHR	RIGHT HAND REVERSE
RHWS	ROUND HEAD WOOD SCREW
RL	ROOF LEADER
RLG	RAILING
RM	ROOM
RND	ROUND
RO	ROUGH OPENING
ROW	RIGHT OF WAY
RS	ROUGH SAWN
RTF	RUBBER TILE FLOORING
RTU	ROOF TOP UNIT
RV	ROOF VENT
RVL	REVEAL
RVS	REVERSE (SIDE)
RVT	RIVET(ED)
RWD	REDWOOD
RWL	RAIN WATER LEADER

S	SOUTH
S2S	SURFACED TWO SIDES
S4S	SURFACED FOUR SIDES
SA	SUPPLY AIR
SALV	SALVAGE
SAT	SUSPENDED ACOUSTICAL TILE
SB	SPLASH BLOCK
SBSTR	SUBSTRATE
SC	SOLID CORE
SCD	SEAT COVER DISPENSER
SCHED	SCHEDULE
SCP	SCUPPER
SCRN	SCREEN
SD	STORM DRAIN
SDBL	SANDBLAST
SECT	SECTION
SGL	SINGLE
SHR	SHOWER
SHT	SHEET(ING)
SHTHG	SHEATHING
SHV	SHELVES (ING)
SIM	SIMILAR
SKLT	SKYLIGHT
SLD	SEALED
SLDG	SLIDE (ING)
SLDR	SOLDER
SLNT	SEALANT
SLV	SLEEVE
SMACNA	SHEET METAL AND AIR CONDITIONING CONTRACTORS NATIONAL ASSOCIATION
SMLS	SEAMLESS
SND	SANITARY NAPKIN DISPENSER
SNDINS	SOUND INSULATION
SNDU	SANITARY NAPKIN DISPOSAL UNIT
SNT	SEALANT
SPC	SUSPENDED PLASTER CEILING
SPD	SOAP DISPENSER
SPEC	SPECIFICATION(S) (ED)
SPRT	SUPPORT
SQ	SQUARE
SSK	SERVICE SINK
SST	STAINLESS STEEL
STA	STATION
STAG	STAGGERED
STC	SOUND TRANSMISSION CLASS
STD	STANDARD
STG	SEATING
STIF	STIFFENER
STIR	STIRRUP
STL	STEEL
STOR	STORAGE
STR	STRAIGHT
ST	STREET
STRCT	STRUCTURAL
STU	STRUCT
SUSP	SUSPENDED
SV	SHEET VINYL
SYMM	SYMMETRICAL
SYNTH	SYNTHETIC
SYS	SYSTEM

T	TREAD
T & B	TOP AND BOTTOM
TB	THRU BOLT
TBE	THREADED BOTH ENDS
TBM	TEMPORARY BENCH MARK
TD	TOWEL DISPENSER
TDR	TOWEL DISPENSER/ RECEPTACLE
TEL	TELEPHONE
TEMP	TEMPORARY
TER	TERRAZZO
TFA	TO FLOOR ABOVE
TFB	TO FLOOR BELOW
T & G	TONGUE & GROOVE
THD	THREAD(ED)
THERM	THERMAL
THK	THICK(NESS)
THRES	THRESHOLD
TKBD	TACKBOARD
TMPD	TEMPERED
TOB	TOP OF BEAM
TOC	TOP OF CURB
TOF	TOP OF FOOTING
TOFF	TOP OF FINISH FLOOR
TOJ	TOP OF JOIST
TOL	TOLERANCE
TOM	TOP OF MASONRY
TOP	TOP OF PARAPET
TOPV	TOP OF PAVEMENT
TOS	TOP OF SHEATHING
TOSL	TOP OF SLAB
TOST	TOP OF STEEL
TOW	TOP OF WALL
TPD	TOILET PAPER DISPENSER
TPTN	TOILET PARTITION
TS	TUBE STEEL
TWLB	TOWEL BAR
TV	TELEVISION
TYP	TYPICAL

UC	UNDERCUT
UGND	UNDERGROUND
UL	UNDERWRITERS LABORATORY
UNFIN	UNFINISHED
UON	UNLESS OTHERWISE NOTED
UR	URINAL
VAR	VARIES
VB	VINYL BASE
VCT	VINYL COMPOSITION TILE
VERT	VERTICAL
VEST	VESTIBULE
VFAT	VINYL FACED ACOUSTIC TILE
VIF	VERIFY IN FIELD
VJ	V-JOINT(ED)
VNR	VENEER
VR	VAPOR RETARDER
VTR	VENT THROUGH ROOF
VWC	VINYL WALL COVERING

W/	WITH
W/W	WALL TO WALL
W/O	WITHOUT
W	WEST
WBL	WOOD BLOCKING
WC	WATER CLOSET
WD	WOOD
WDP	WOOD PANELING
WDW	WINDOW
WF	WIDE FLANGE
WFS	WOOD FURRING STRIP
WGL	WIRED GLASS
WH	WALL HUNG
WI	WROUGHT IRON
WID	WIDTH, WIDE
WLD	WELD(ED)
WM	WIRE MESH
WP	WATERPROOF(ING)
WPT	WORKING POINT
WR	WIRE ROPE
WS	WOOD SCREW
WSCT	WAINSCOT
WT	WEIGHT
WWF	WELDED WIRE FABRIC

XBRACE	CROSS BRACE
XFMR	TRANSFORMER
XSECT	CROSS SECTION

YCO	YARD CLEANOUT
YD	YARD

GOVERNING AGENCIES

DIVISION OF THE STATE ARCHITECT
STRUCTURAL SAFETY SECTION (DSA/SSS)
700 NORTH ALAMEDA STREET, SUITE 5-500
LOS ANGELES, CALIFORNIA 90012
(213) 897-3995

DIVISION OF THE STATE ARCHITECT
FIRE AND LIFE SAFETY SECTION (DSA/FLS)
700 NORTH ALAMEDA STREET, SUITE 5-500
LOS ANGELES, CALIFORNIA 90013
(213) 897-3995

GOVERNING CODES

2016 CALIFORNIA BUILDING STANDARDS ADMINISTRATIVE CODE
CALIFORNIA CODE OF REGULATIONS
(CCR) TITLE 24, PART 1

2016 CALIFORNIA BUILDING CODE (CBC)
CALIFORNIA CODE OF REGULATIONS
(CCR) TITLE 24, PART 2
(2015 INTERNATIONAL BUILDING CODE (IBC) W/ CALIFORNIA AMENDMENTS)

2016 CALIFORNIA ELECTRICAL CODE (CEC)
CALIFORNIA CODE OF REGULATIONS
(CCR) TITLE 24, PART 3
(2014 NATIONAL ELECTRIC CODE (NEC) W/ CALIFORNIA AMENDMENTS)

2016 CALIFORNIA MECHANICAL CODE (CMC)
CALIFORNIA CODE OF REGULATIONS
(CCR) TITLE 24, PART 4
(2015 UNIFORM MECHANICAL CODE (UMC) W/ CALIFORNIA AMENDMENTS)

2016 CALIFORNIA PLUMBING CODE (CPC)
CALIFORNIA CODE OF REGULATIONS
(CCR) TITLE 24, PART 5
(2015 UNIFORM PLUMBING CODE (UPC) W/ CALIFORNIA AMENDMENTS)

2016 CALIFORNIA ENERGY CODE
CALIFORNIA CODE OF REGULATIONS
(CCR) TITLE 24, PART 6

2016 CALIFORNIA HISTORICAL BUILDING CODE
CALIFORNIA CODE OF REGULATIONS
(CCR) TITLE 24, PART 8

2016 CALIFORNIA FIRE CODE (CFC)
CALIFORNIA CODE OF REGULATIONS
(CCR) TITLE 24, PART 9
(2015 INTERNATIONAL FIRE CODE (IFC) W/ CALIFORNIA AMENDMENTS)

2016 CALIFORNIA EXISTING BUILDING CODE
CALIFORNIA CODE OF REGULATIONS
(CCR) TITLE 24, PART 10
(2015 INTERNATIONAL EXISTING BUILDING CODE (IEBC) W/ CALIFORNIA AMENDMENTS)

2016 CALIFORNIA GREEN BUILDING STANDARDS CODE (CAL GREEN)
CALIFORNIA CODE OF REGULATIONS
(CCR) TITLE 24, PART 11

2016 CALIFORNIA REFERENCED STANDARDS CODE -CALIFORNIA CODE OF REGULATIONS
(CCR) TITLE 24, PART 12
1990 STATE FIRE MARSHAL REGULATIONS (AS AMENDED TO DATE) CALIFORNIA CODE OF REGULATIONS (CCR) TITLE 19

CALIFORNIA ELEVATOR SAFETY CODE, CALIFORNIA CODE OF REGULATIONS (CCR) TITLE 8
(AS AMENDED TO DATE)

2010 AMERICANS WITH DISABILITY ACT (ADA) STANDARDS FOR ACCESSIBLE DESIGN (ADAS)

APPLICABLE NFPA , UL AND ICC STANDARDS

NFPA 13	-	AUTOMATIC SPRINKLER SYSTEMS, 2016 EDITION
NFPA 14	-	STANDPIPE SYSTEMS, 2013 EDITION
NFPA 17	-	DRY CHEMICAL EXTINGUISHING SYSTEMS, 2013 EDITION
NFPA 17A	-	WET CHEMICAL SYSTEMS, 2013 EDITION
NFPA 20	-	STATIONARY PUMPS, 2016 EDITION
NFPA 22	-	WATER TANKS FOR PRIVATE FIRE PROTECTION, 2013 EDITION
NFPA 24	-	PRIVATE FIRE MAINS, 2016 EDITION
NFPA 25	-	WATER BASED FIRE PROTECTION SYSTEMS, 2013 EDITION
NFPA 72	-	NATIONAL FIRE ALARM CODE, 2016 EDITION
NFPA 80	-	FIRE DOORS AND OTHER OPENING PROTECTIVES, 2016 EDITION
NFPA 92	-	STANDARD FOR SMOKE CONTROL SYSTEMS, 2015 EDITION
NFPA 253	-	CRITICAL RADIANT FLUX OF FLOOR COVERINGS, 2015 EDITION
NFPA 2001	-	CLEAN AGENT FIRE EXTINGUISHING SYSTEMS, 2015 EDITION
ICC 300	-	ICC STANDARDS FOR BLEACHERS, FOLDING AND TELESCOPIC SEATING, AND GRANDSTANDS, 2012 EDITION
UL 300	-	FIRE TESTING OF FIRE EXTINGUISHING SYSTEMS FOR PROTECTION OF COMMERCIAL RESTAURANT COOKING AREAS, 2005 EDITION
UL 464	-	AUDIBLE SIGNAL APPLIANCES, 2003 EDITION
UL 521	-	HEAT DETECTORS FOR FIRE PROTECTIVE SIGNALING SYSTEMS, 1999 EDITION

NOTE: ALL NFPA STANDARDS AS LISTED ARE TO CONFORM TO THE EDITION AS LISTED WITH THE LATEST CALIFORNIA AMENDMENTS. REFERENCE THE 2016 CBC, TITLE 24, PART 2 - CHAPTER 35 FOR ADDITIONAL APPLICABLE NFPA, UL. STANDARDS AND ANY CALIFORNIA AMENDMENTS TO NFPA STANDARDS.

ARCHITECTS
WLC
CLIENT FOCUSED • PASSION DRIVEN

SOUTHERN CALIFORNIA
8163 ROCHESTER AVENUE, SUITE 100
RANCHO CUCAMONGA
CALIFORNIA 91730-0729

TEL: 909-987-0909
www.wlcarchitects.com

LONGFELLOW ELEMENTARY SCHOOL
HVAC REPLACEMENT
COMPTON UNIFIED SCHOOL DISTRICT
1101 S DWIGHT AVE.
COMPTON, CA 90220

LICENSED ARCHITECT
MARK GRAHAM
C-26046
03-31-19
STATE OF CALIFORNIA

CONSULTANT

IDENTIFICATION STAMP
DSA, OF THE STATE ARCHITECT
OFFICE OF REGULATION SERVICES
APPL 03-118423
AC FLS SS EY
DATE MAR 0 6 2018
FILE: 19-23

NO	DATE	BY	DESCRIPTION
1			REVISIONS

DRAWN:	CHECKED:
DATE: 3/6/2018	SCALE:
PROJECT NUMBER: 1723400	

ARCH DWGS ABBREVIATIONS & GOVERNING CODE

DRAWING NUMBER: A0.2

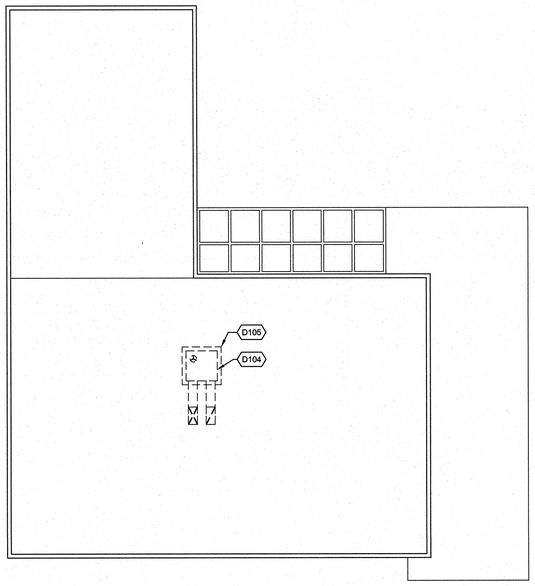

NORTH

BUILDING A - DEMO ROOF PLAN | 1/8" = 1'-0" | 2

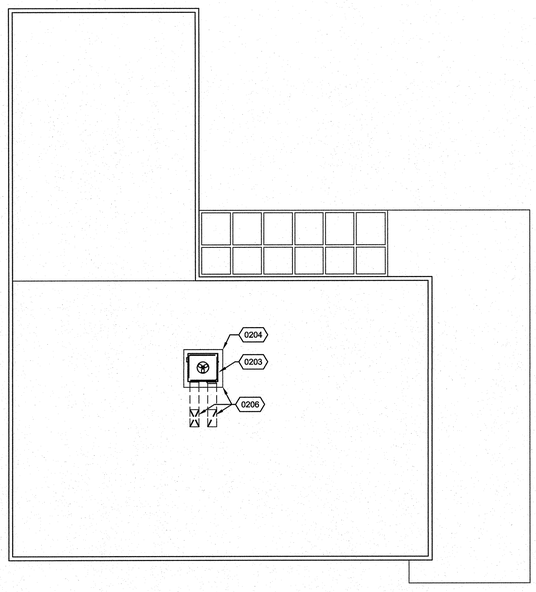

NORTH

BUILDING A - NEW ROOF PLAN | 1/8" = 1'-0" | 3

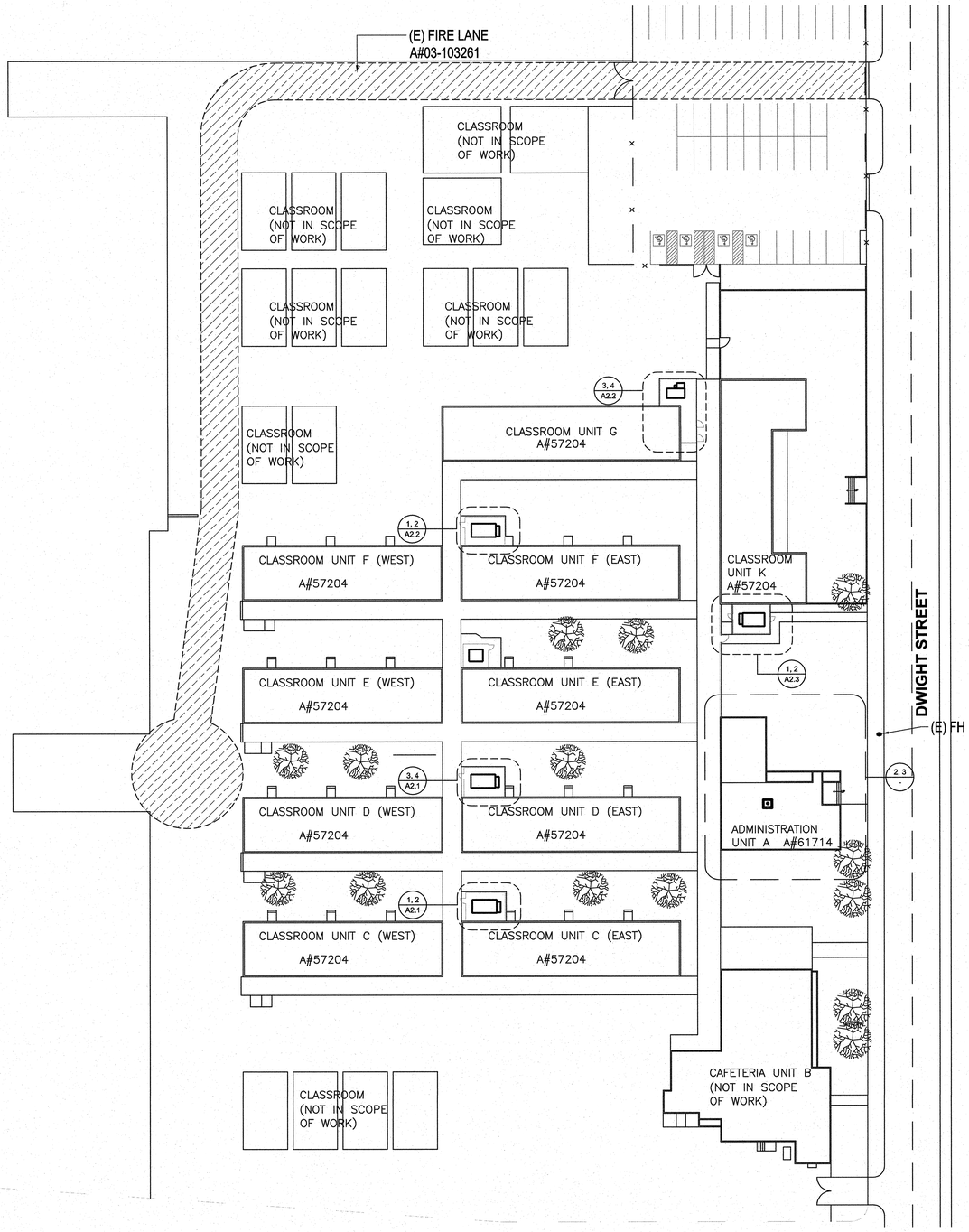

NORTH

SITE PLAN | 1" = 30'-0" | 1

-

D104 (E) HVAC UNIT TO BE REMOVED

D105 REMOVE (E) COUNTER FLASHING

0203 (N) HVAC UNIT, REF TO MECH DWGS.

0204 (N) 20 GA SHEET METAL COUNTER FLASHING, PAINTED

0206 PATCH ROOFING AT ROOF OPENING AND PLATFORM TO MATCH EXISTING ROOFING.

REFERENCE NOTES

BUILDING DATA

BUILDING	OCCU TYPE	CONSTR TYPE	AREA
A	B	TYPE V-B	3,194 SF
C	E	TYPE V-B	7,080 SF
D	E	TYPE V-B	7,080 SF
E	E	TYPE V-B	7,080 SF
F	E	TYPE V-B	7,080 SF
G	E	TYPE V-B	3,840 SF
K	E	TYPE V-B	4,462 SF

WLC ARCHITECTS
CLIENT FOCUSED • PASSION DRIVEN

SOUTHERN CALIFORNIA
8163 ROCHESTER AVENUE, SUITE 100
RANCHO CUCAMONGA
CALIFORNIA 91730-0729

TEL: 909-987-0909

www.wlcarchitects.com

LONGFELLOW ELEMENTARY SCHOOL HVAC REPLACEMENT

COMPTON UNIFIED SCHOOL DISTRICT

1101 S DWIGHT AVE.
COMPTON, CA 90220

LICENSED ARCHITECT
MARK GRAHAM
C-26046
03-31-19
STATE OF CALIFORNIA

CONSULTANT

IDENTIFICATION STAMP
DIV. OF THE STATE ARCHITECT
OFFICE OF REGULATION SERVICES
APPL 03-118423
AC — FLS — SS —
DATE MAR 0 6 2018
FILE: 19-23

NO	DATE	BY	DESCRIPTION
1			REVISIONS

DRAWN: CTW | CHECKED:
DATE: 3/6/2018 | SCALE:
PROJECT NUMBER: 1723400

SITE PLAN AND BUILDING A DEMO & NEW ROOF PLANS

DRAWING NUMBER: A1.0

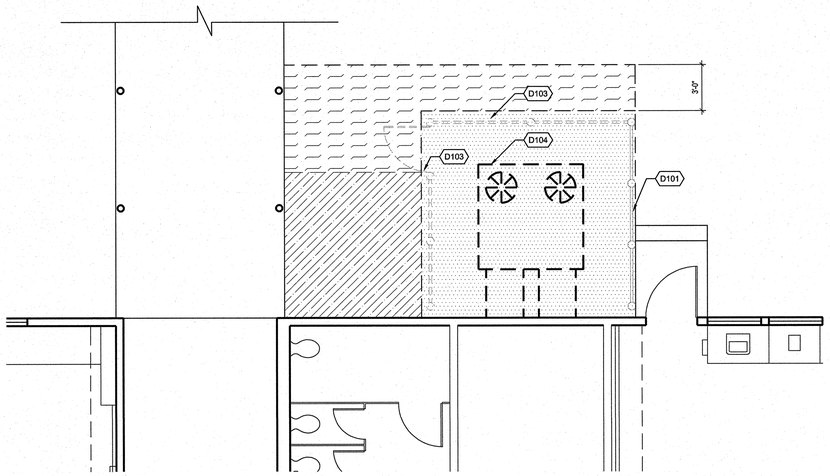

NORTH

BUILDING D - ENLARGED DEMO FLOOR PLAN | 1/4" = 1'-0" | 3

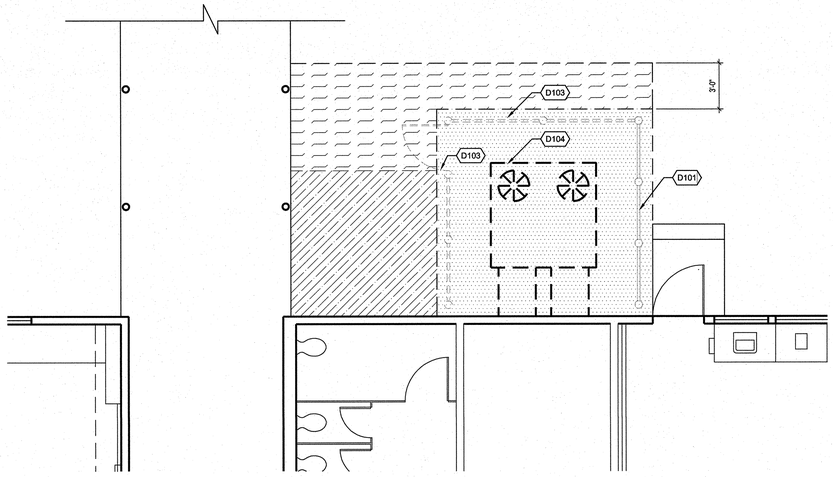

NORTH

BUILDING C - ENLARGED DEMO FLOOR PLAN | 1/4" = 1'-0" | 1

D101 (E) CHAIN LINK FENCE TO REMAIN.

D102 (E) CHAIN LINK GATE TO REMAIN.

D103 (E) CHAIN LINK FENCE, GATE, AND POST TO BE REMOVED AND AND PROTECTED FOR REINSTALLATION, TYP.

D104 (E) HVAC UNIT TO BE REMOVED

0201 RINSTALL (E) CHAIN LINK FENCE/GATE, REF TO DTL 6/A2.3

0202 (N) CHAIN LINK FENCE TO MATCH (E), REF TO DTL 6/A2.3

0203 (N) HVAC UNIT, REF TO MECH DWGS.

0205 (N) DUCT WORK, REF TO MECH DWGS.

REFERENCE NOTES

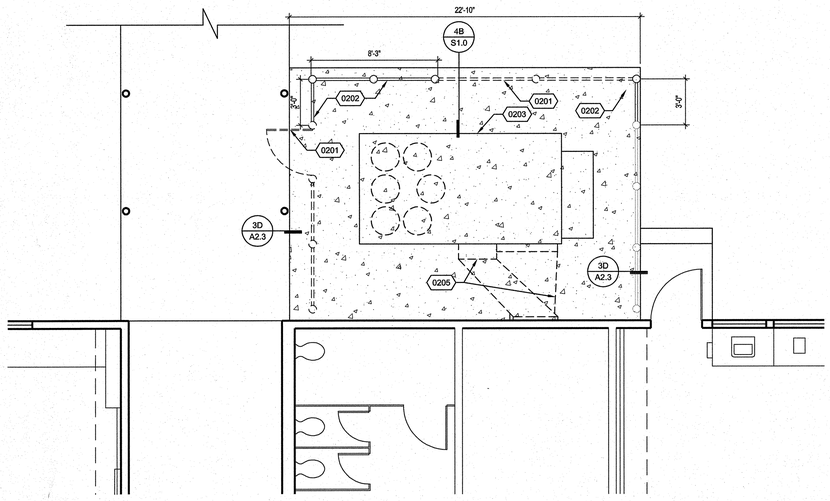

NORTH

BUILDING D - ENLARGED NEW FLOOR PLAN | 1/4" = 1'-0" | 4

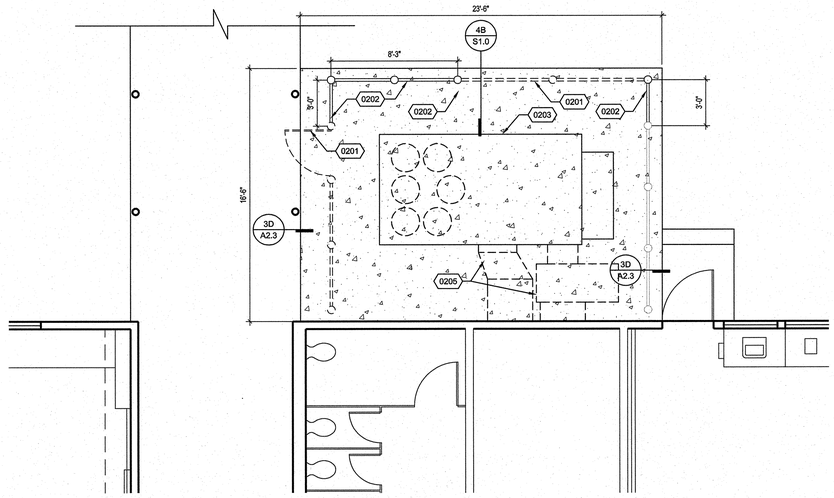

NORTH

BUILDING C - ENLARGED NEW FLOOR PLAN | 1/4" = 1'-0" | 2

DEMOLISH (E) AC PAVING

DEMOLISH (E) CONCRETE PAD

DEMOLISH (E) TURF

(N) CONCRETE PAD, REF TO DTL 3/A2.3

LEGEND

ARCHITECTS
WLC
CLIENT FOCUSED • PASSION DRIVEN

SOUTHERN CALIFORNIA
8163 ROCHESTER AVENUE, SUITE 100
RANCHO CUCAMONGA
CALIFORNIA 91730-0729

TEL: 909-987-0909

www.wlcarchitects.com

LONGFELLOW ELEMENTARY SCHOOL HVAC REPLACEMENT

COMPTON UNIFIED SCHOOL DISTRICT

1101 S DWIGHT AVE.
COMPTON, CA 90220

LICENSED ARCHITECT
MARK GRAHAM
C-26046
03-31-19
STATE OF CALIFORNIA

CONSULTANT

IDENTIFICATION STAMP
DSA / OF THE STATE ARCHITECT
OFFICE OF REGULATION SERVICES
APPL 03-118423
FILE: 19-23
AC — FLS — SS
DATE MAR 07 2018

NO	DATE	BY	DESCRIPTION
1			REVISIONS

DRAWN: CTW	CHECKED:
DATE: 3/6/2018	SCALE:
PROJECT NUMBER: 1723400	

BUILDING C & D ENLARGED DEMO & NEW FLOOR PLANS

DRAWING NUMBER: A2.1

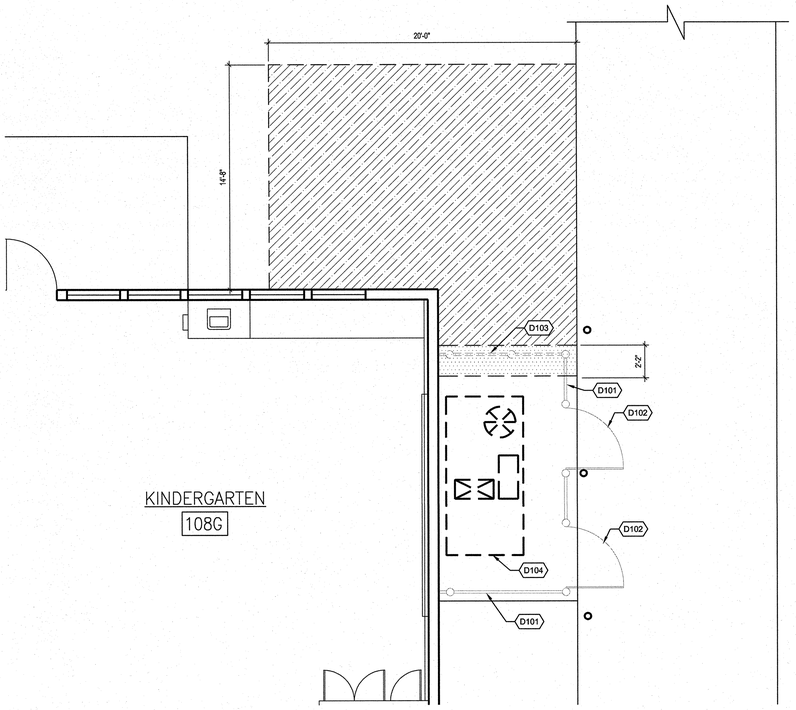

BUILDING G - ENLARGED DEMO FLOOR PLAN | 1/4" = 1'-0" | 3

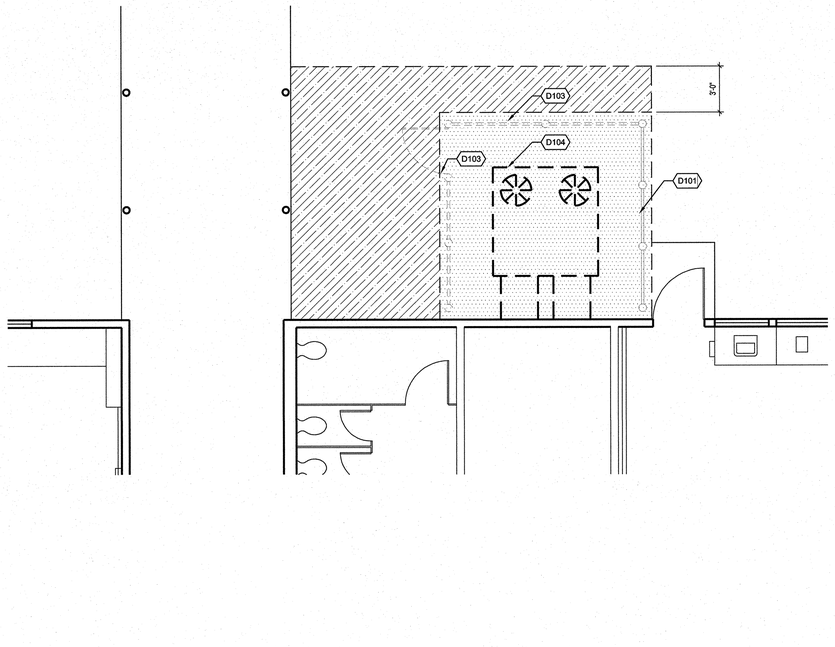

BUILDING F - ENLARGED DEMO FLOOR PLAN | 1/4" = 1'-0" | 1

D101 (E) CHAIN LINK FENCE TO REMAIN.

D102 (E) CHAIN LINK GATE TO REMAIN.

D103 (E) CHAIN LINK FENCE, GATE, AND POST TO BE REMOVED AND AND PROTECTED FOR REINSTALLATION, TYP.

D104 (E) HVAC UNIT TO BE REMOVED

0201 RINSTALL (E) CHAIN LINK FENCE/GATE, REF TO DTL 6/A2.3

0202 (N) CHAIN LINK FENCE TO MATCH (E), REF TO DTL 6/A2.3

0203 (N) HVAC UNIT, REF TO MECH DWGS.

0204 (N) CHAIN LINK FENCE GATE TO MATCH (E), REF TO DTL 7/A2.3

0205 (N) DUCT WORK, REF TO MECH DWGS.

REFERENCE NOTES

DEMOLISH (E) AC PAVING

DEMOLISH (E) CONCRETE PAD

DEMOLISH (E) TURF

(N) CONCRETE PAD, REF TO DTL 3/A2.3

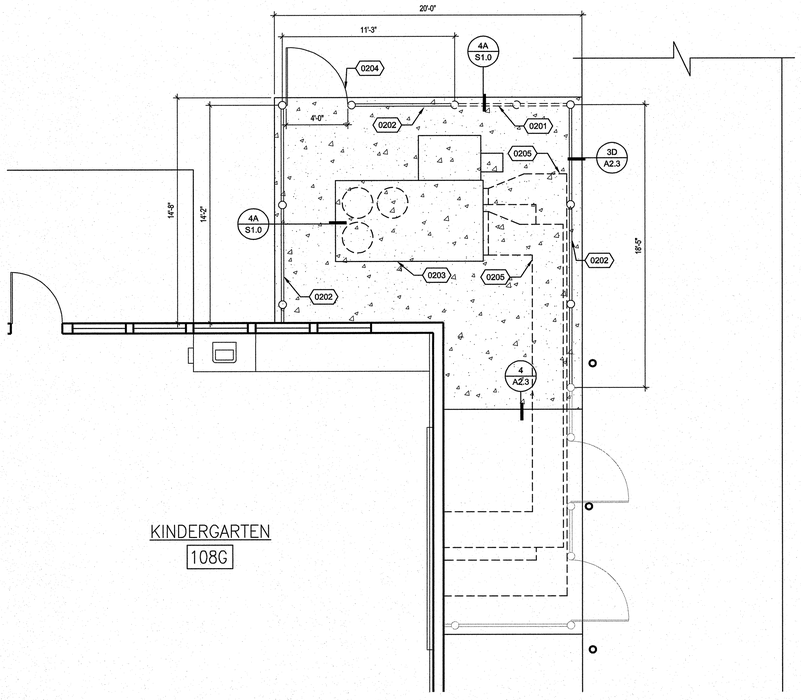

BUILDING G - ENLARGED NEW FLOOR PLAN | 1/4" = 1'-0" | 4

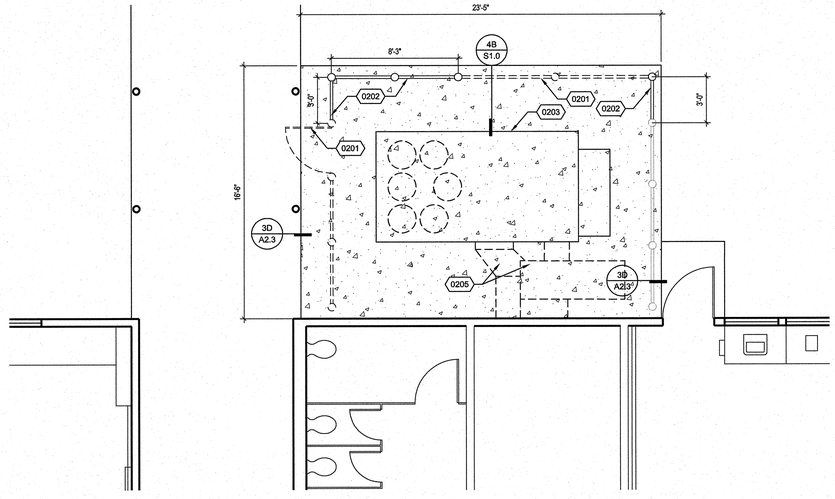

BUILDING F - ENLARGED NEW FLOOR PLAN | 1/4" = 1'-0" | 2

LEGEND

ARCHITECTS
WLC
CLIENT FOCUSED • PASSION DRIVEN

SOUTHERN CALIFORNIA
8163 ROCHESTER AVENUE, SUITE 100
RANCHO CUCAMONGA
CALIFORNIA 91730-0729

TEL: 909-987-0909

www.wlcarchitects.com

LONGFELLOW ELEMENTARY SCHOOL HVAC REPLACEMENT

COMPTON UNIFIED SCHOOL DISTRICT

1101 S DWIGHT AVE.
COMPTON, CA 90220

LICENSED ARCHITECT
MARK GRAHAM
C-28046
03-31-19
STATE OF CALIFORNIA

CONSULTANT

IDENTIFICATION STAMP
DIV. OF THE STATE ARCHITECT
OFFICE OF REGULATION SERVICES
APPL 03-118423
AC FLS SS EV
DATE MAY 0 8 2019
FILE: 19-23

NO	DATE	BY	DESCRIPTION
1			REVISIONS

DRAWN: CTW | CHECKED:
DATE: 3/6/2018 | SCALE:
PROJECT NUMBER: 1723400

BUILDING F & G ENLARGED DEMO & NEW FLOOR PLANS

DRAWING NUMBER: A2.2

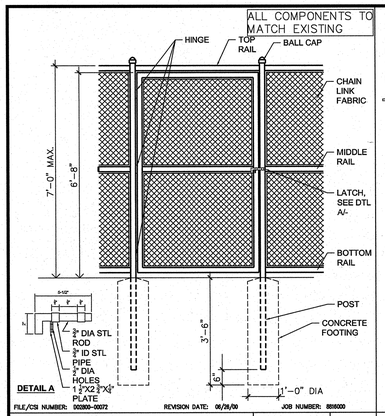

CHAINLINK FENCE GATE | 1/2"=1'-0" | 7

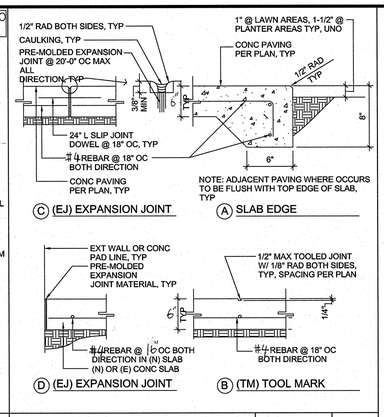

NEW CONC PAVING | 1-1/2" = 1'-0" | 3

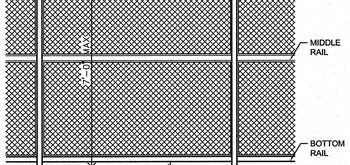

NEW CONC PAVING | 1-1/2" = 1'-0" | 4

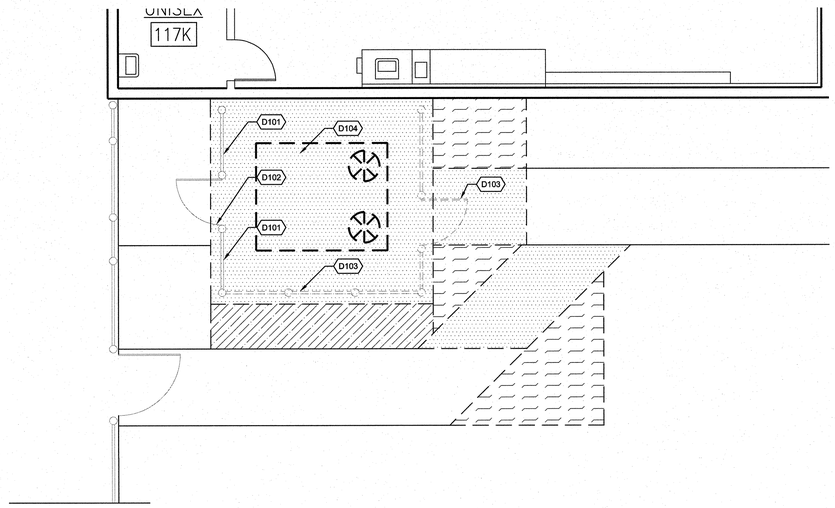

BUILDING K - ENLARGED DEMO FLOOR PLAN | 1/4" = 1'-0" | 1

NORTH

REFERENCE NOTES

- D101 (E) CHAIN LINK FENCE TO REMAIN.
- D102 (E) CHAIN LINK GATE TO REMAIN.
- D103 (E) CHAIN LINK FENCE, GATE, AND POST TO BE REMOVED AND AND PROTECTED FOR REINSTALLATION, TYP.
- D104 (E) HVAC UNIT TO BE REMOVED
- 0201 RINSTALL (E) CHAIN LINK FENCE/GATE, REF TO DTL 6/A2.3
- 0202 (N) CHAIN LINK FENCE TO MATCH (E), REF TO DTL 6/A2.3
- 0203 (N) HVAC UNIT, REF TO MECH DWGS.
- 0205 (N) DUCT WORK, REF TO MECH DWGS.

-	8	NEW CONC PAVING	1-1/2" = 1'-0" | 4

-	9	-	- | 5

-	10	CHAIN LINK FENCE	1/2" = 1'-0" | 6

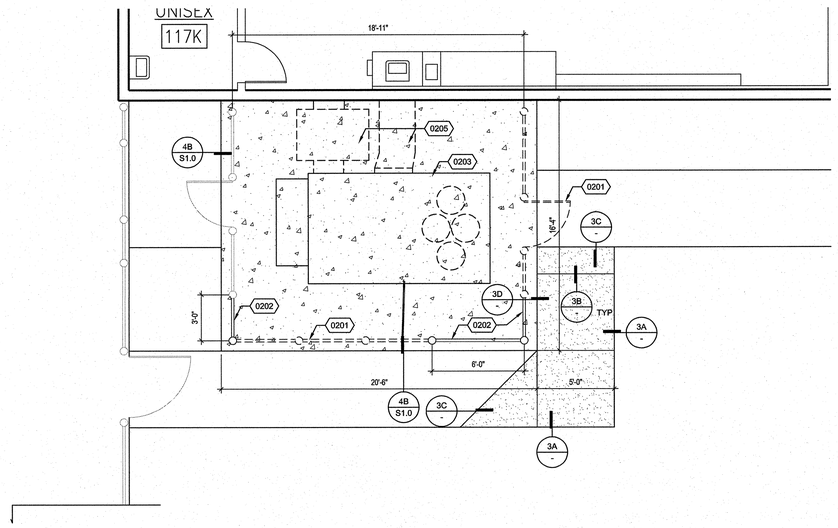

BUILDING K - ENLARGED NEW FLOOR PLAN | 1/4" = 1'-0" | 2

NORTH

LEGEND

- DEMOLISH (E) AC PAVING
- DEMOLISH (E) CONCRETE PAD
- DEMOLISH (E) TURF
- (N) CONCRETE PAD, REF TO DTL 3/A2.3
- (N) CONCRETE PAVING, REF TO DTL 3 & 4/A2.3

ARCHITECTS WLC
CLIENT FOCUSED • PASSION DRIVEN

SOUTHERN CALIFORNIA
8163 ROCHESTER AVENUE, SUITE 100
RANCHO CUCAMONGA
CALIFORNIA 91730-0729
TEL: 909-987-0909
www.wlcarchitects.com

LONGFELLOW ELEMENTARY SCHOOL HVAC REPLACEMENT

COMPTON UNIFIED SCHOOL DISTRICT
1101 S DWIGHT AVE.
COMPTON, CA 90220

LICENSED ARCHITECT MARK GRAHAM C-26046 03-31-19 STATE OF CALIFORNIA

CONSULTANT

IDENTIFICATION STAMP DIV. OF THE STATE ARCHITECT OFFICE OF REGULATION SERVICES
FILE: 19-23
APPL 03-118423
AC FLS SS
DATE MAR 06 2018

NO	DATE	BY	DESCRIPTION
1			REVISIONS

DRAWN: CTW	CHECKED:
DATE: 3/6/2018	SCALE:
PROJECT NUMBER: 1723400	

BLDG K ENLARGED DEMO & NEW FLOOR PLANS AND DETAILS

DRAWING NUMBER: A2.3

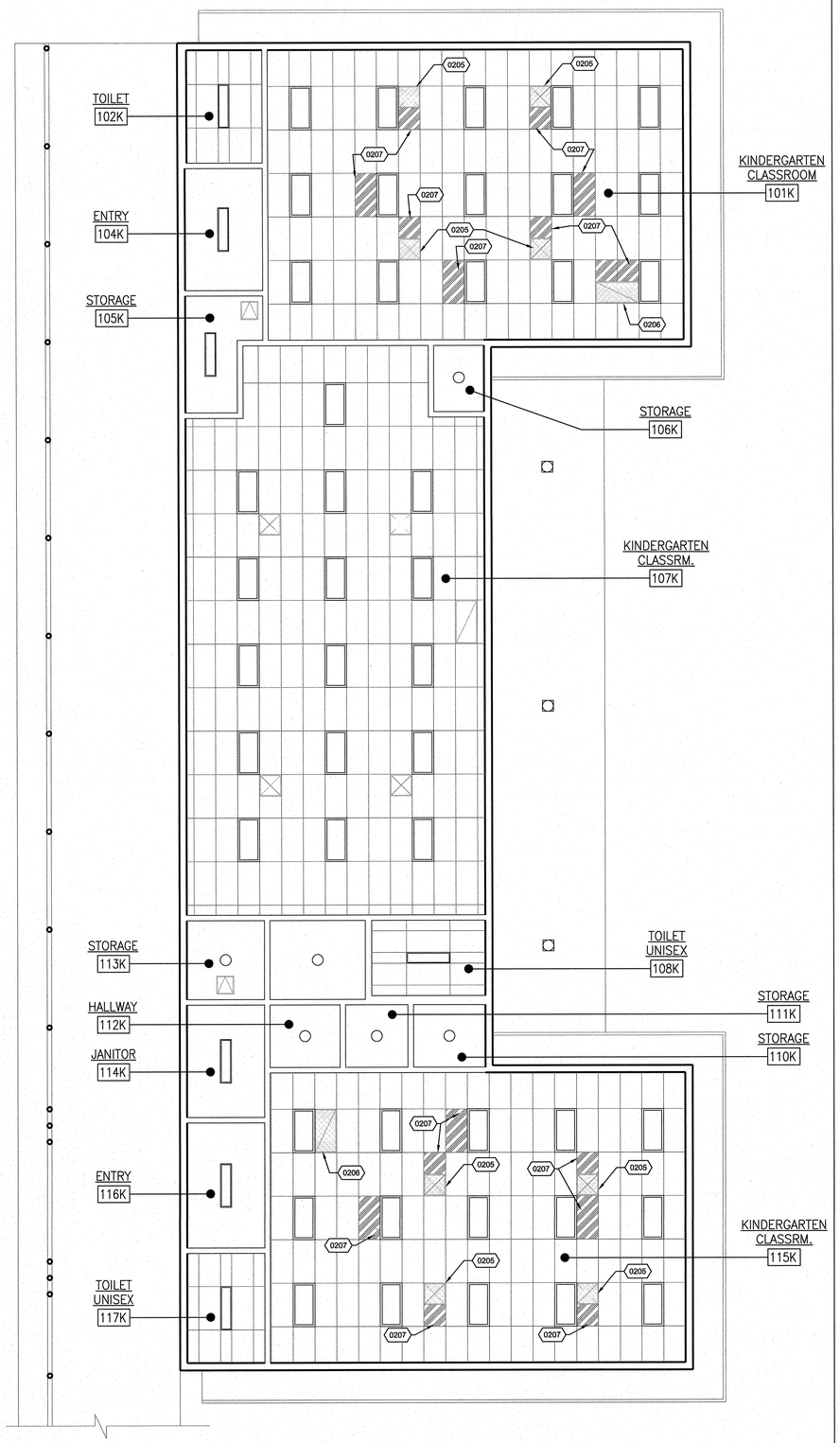

BUILDING K - ENLARGED NEW REFLECTED CEILING PLAN | 3/16" = 1'-0" | 2

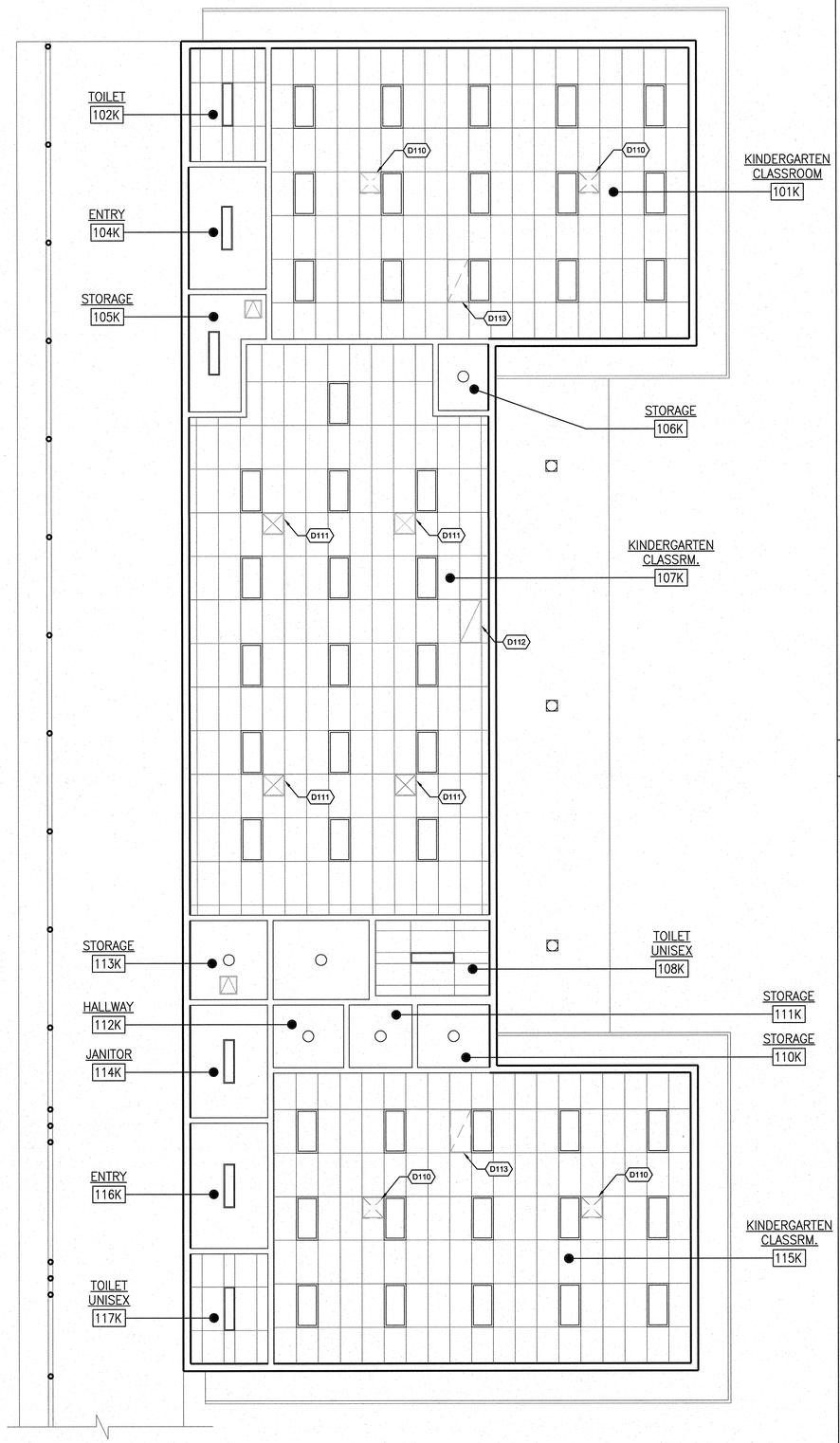

BUILDING K - ENLARGED DEMO REFLECTED CEILING PLAN | 3/16" = 1'-0" | 1

D110 (E) SUPPLY AIR DIFFUSER TO BE REMOVED
D111 (E) SUPPLY AIR DIFFUSER TO REMAIN
D112 (E) RETURN GRILL TO REMAIN
D113 (E) RETURN GRILL TO BE REMOVED
0205 (N) SUPPLY AIR DIFFUSER, REF TO MECH DWGS
0206 (N) RETURN AIR GRILLE, REF TO MECH DWGS
0207 (N) CEILING TILE TO MATCH EXISTING AND MODIFY THE CEILING GRILL TO FIT THE (N) DIFFUSER OR GRILLE

REFERENCE NOTES

1. IT IS THE MECHANICAL CONTRACTOR'S RESPONSE TO MODIFIED THE EXISTING CEILING GRILL AND CEILING TILE TO FIT THE NEW SUPPLY DIFFUSER AND RETURN GRILLE, AND PROVIDE THE NEW CEILING TILE FOR THE REMAIN EXISTING OPENING.

GENERAL NOTES

WLC ARCHITECTS
CLIENT FOCUSED • PASSION DRIVEN
SOUTHERN CALIFORNIA
8163 ROCHESTER AVENUE, SUITE 100
RANCHO CUCAMONGA
CALIFORNIA 91730-0729
TEL: 909-987-0909
www.wlcarchitects.com

LONGFELLOW ELEMENTARY SCHOOL
HVAC REPLACEMENT
COMPTON UNIFIED SCHOOL DISTRICT
1101 S DWIGHT AVE.
COMPTON, CA 90220

LICENSED ARCHITECT
MARK GRAHAM
C-26046
03-31-19
STATE OF CALIFORNIA

CONSULTANT

IDENTIFICATION STAMP
DIV. OF THE STATE ARCHITECT
OFFICE OF REGULATION SERVICES
APPL 03-118423
FILE: 19-23
AC FLS SS EY
DATE MAR 06 2018

NO	DATE	BY	DESCRIPTION
#	REVISIONS		

DRAWN: CTW	CHECKED:
DATE: 3/6/2018	SCALE:
PROJECT NUMBER: 1723400	

BUILDING K ENLARGED DEMO & NEW REFEL CEILING PLANS

DRAWING NUMBER: A3.1

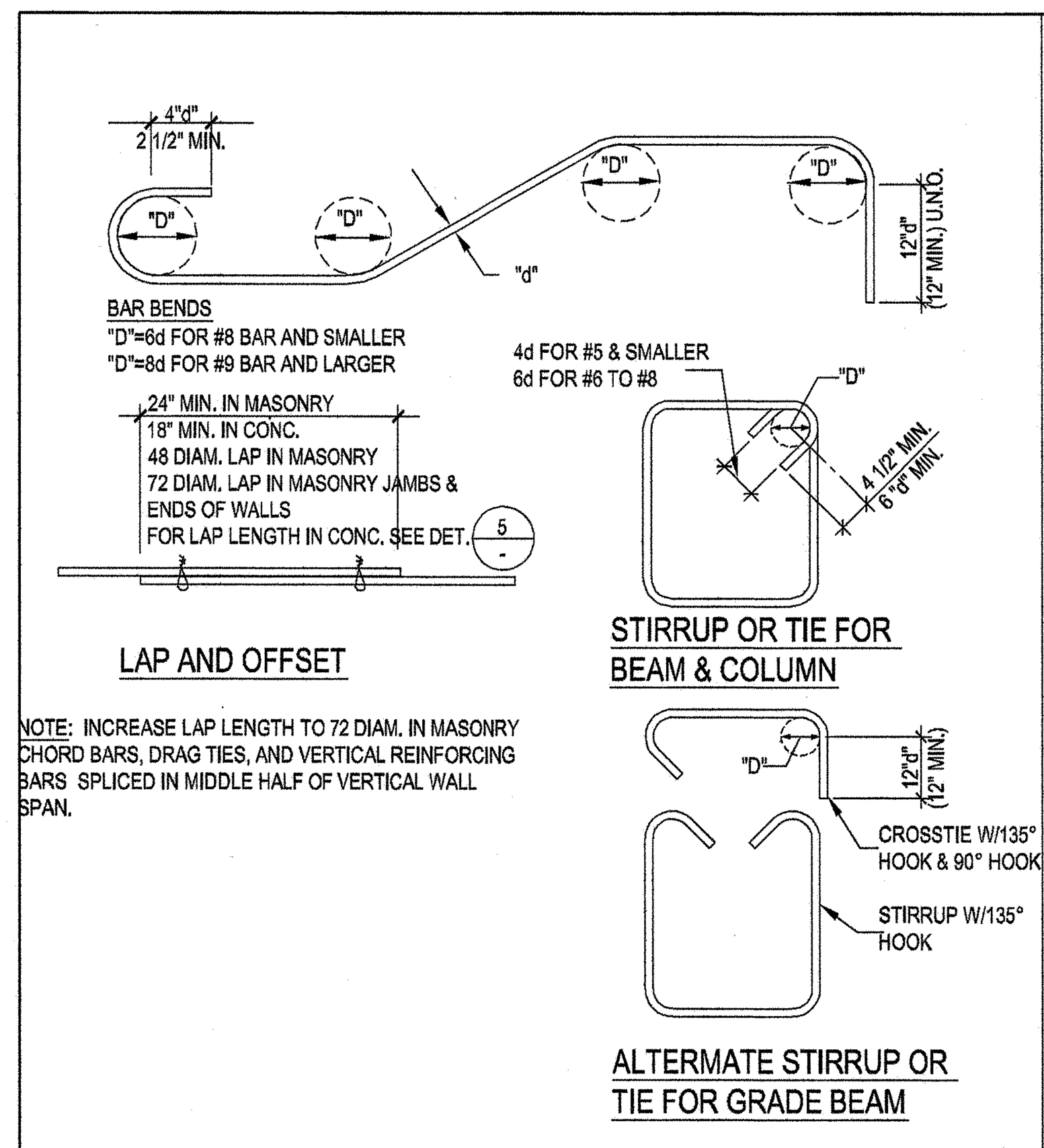

REINFORCING HOOKS AND BENDS — 3/4"=1'-0" — 1

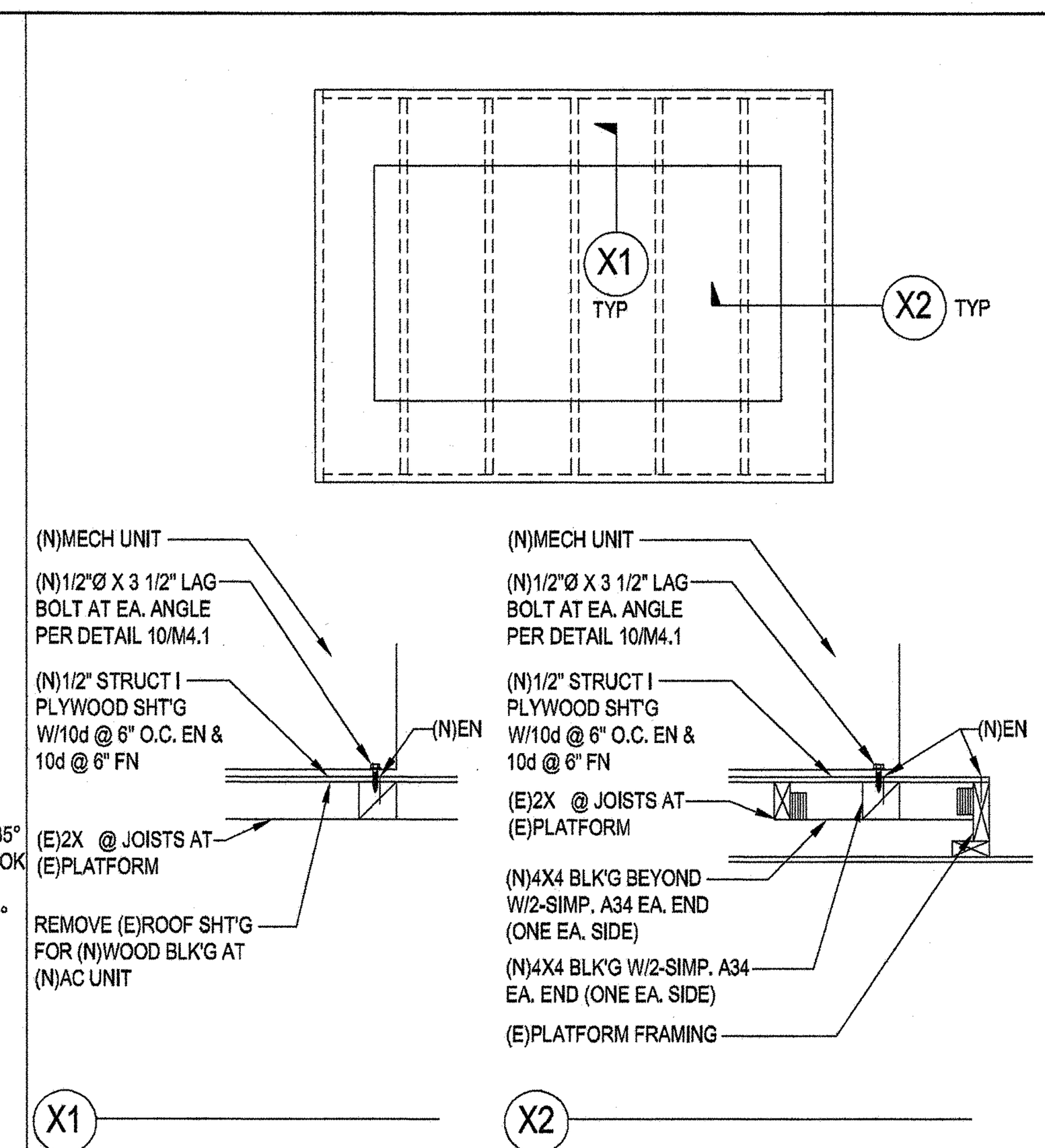

MECH'L PLATFORM — 3/4"=1'-0" — 2

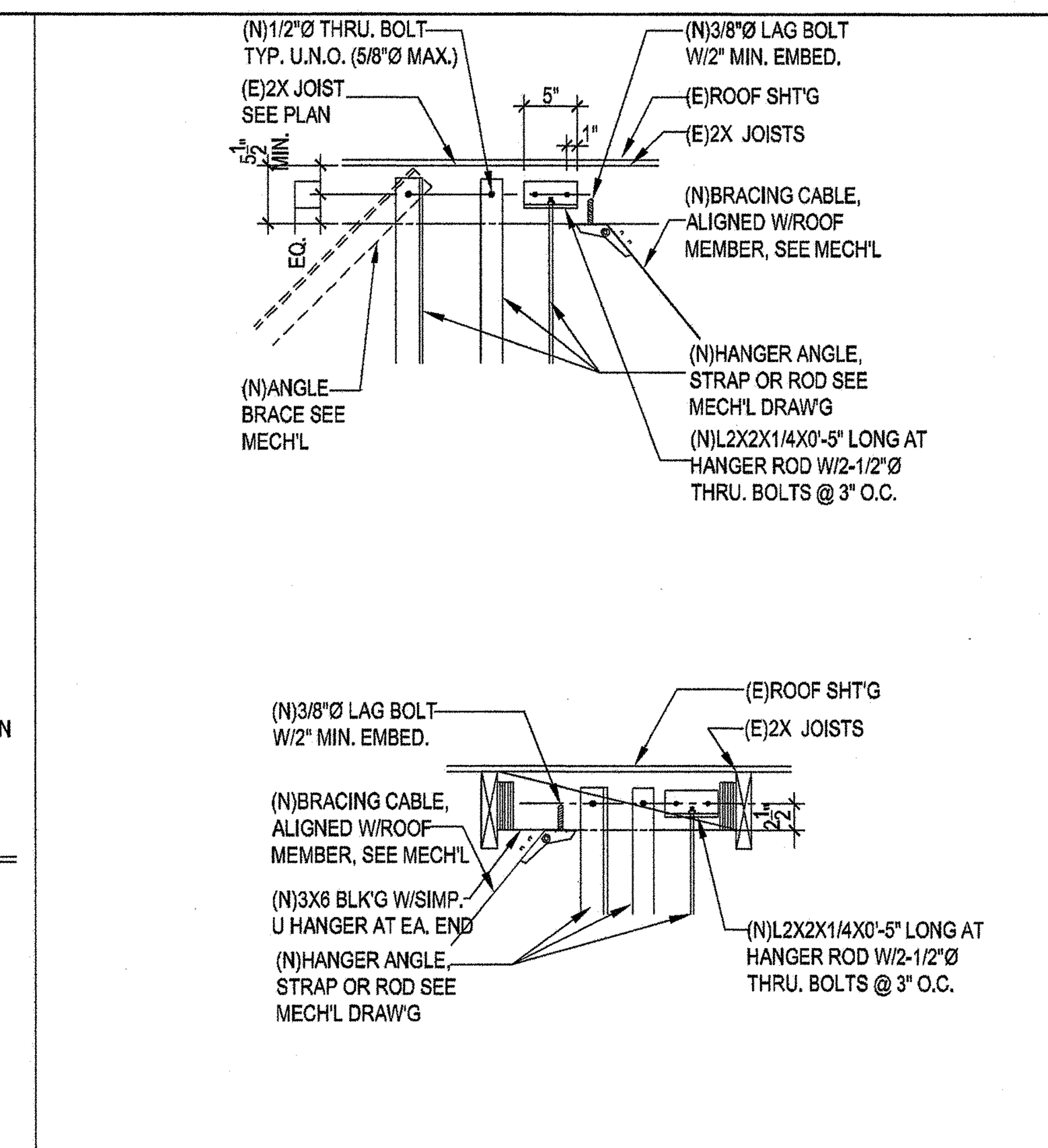

HANGER ANGLE, ROD OR STRAP & BRACE TO (E)ROOF STRUCTURE — 3/4"=1'-0" — 3

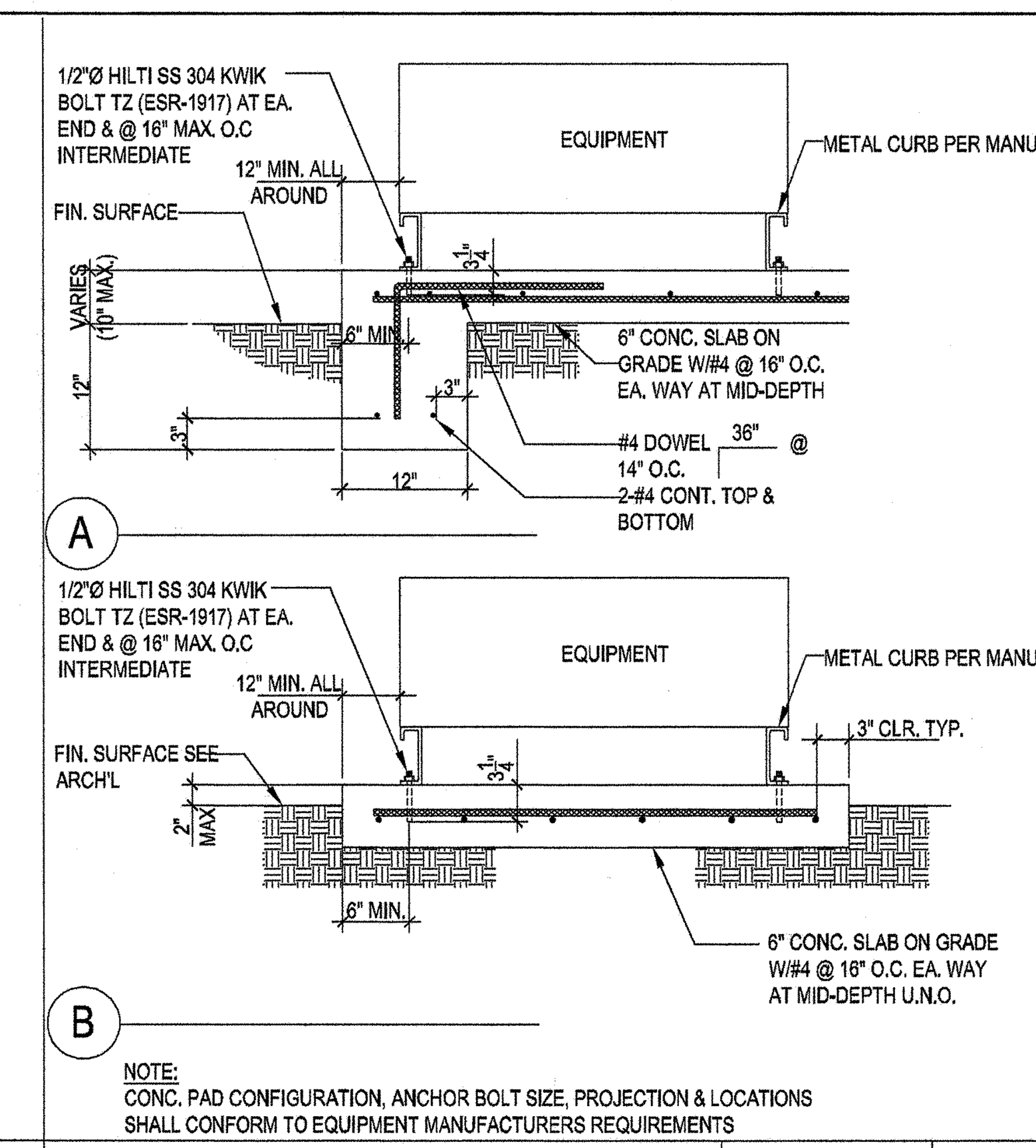

HOUSE KEEPING OR EQUIPMENT PAD — 3/4"=1'-0" — 4

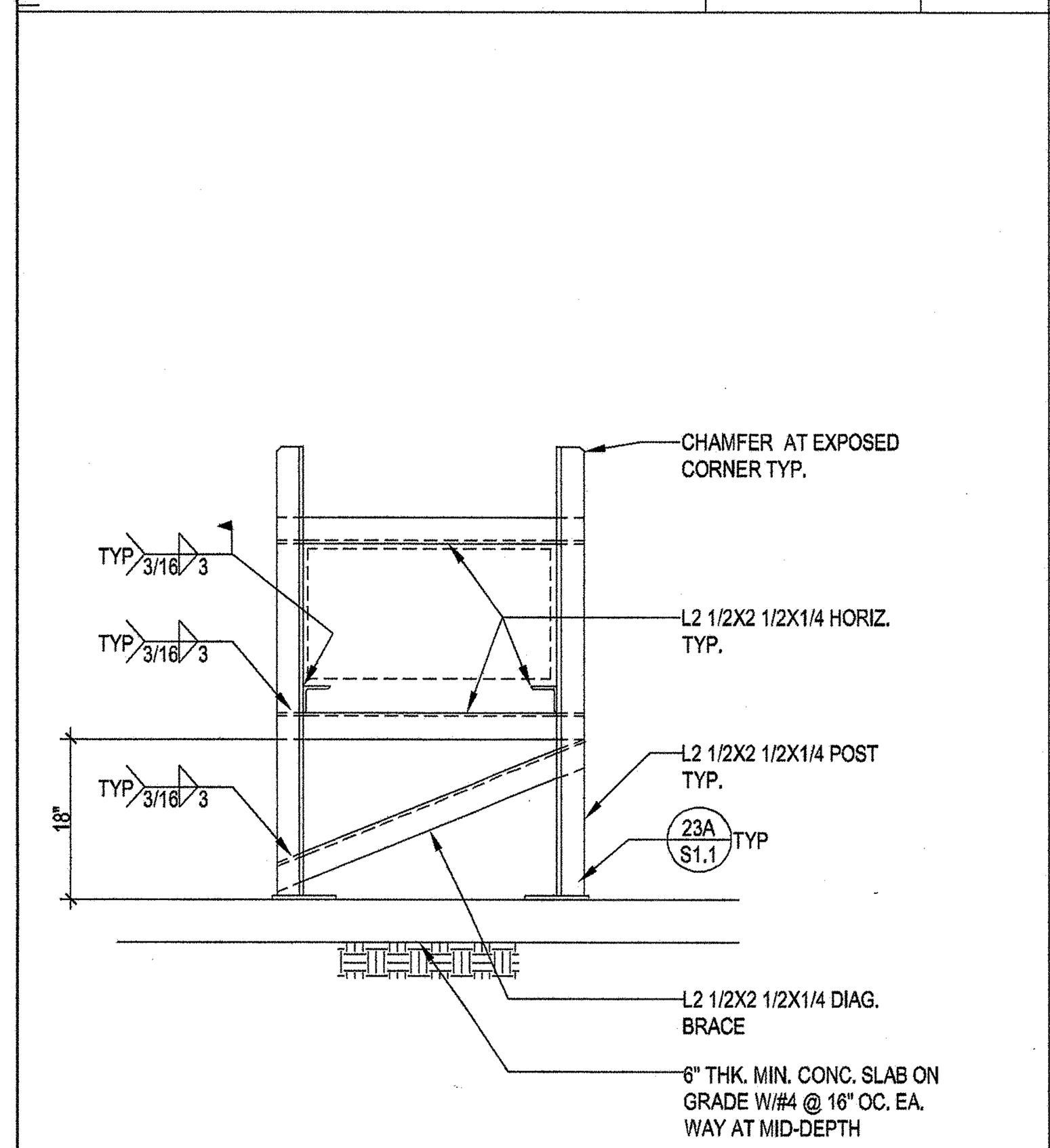

3/4"=1'-0" — 7

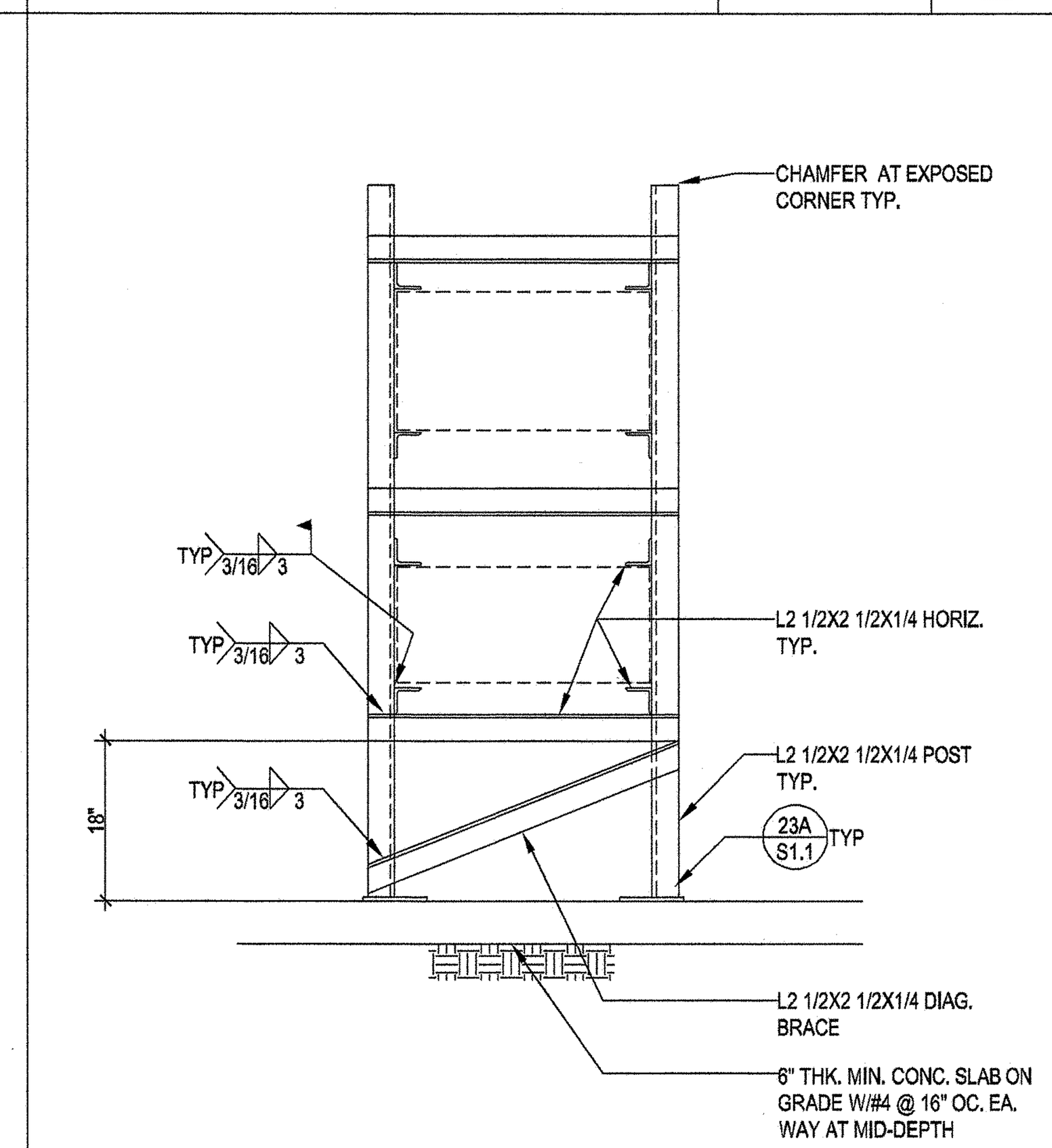

3/4"=1'-0" — 8

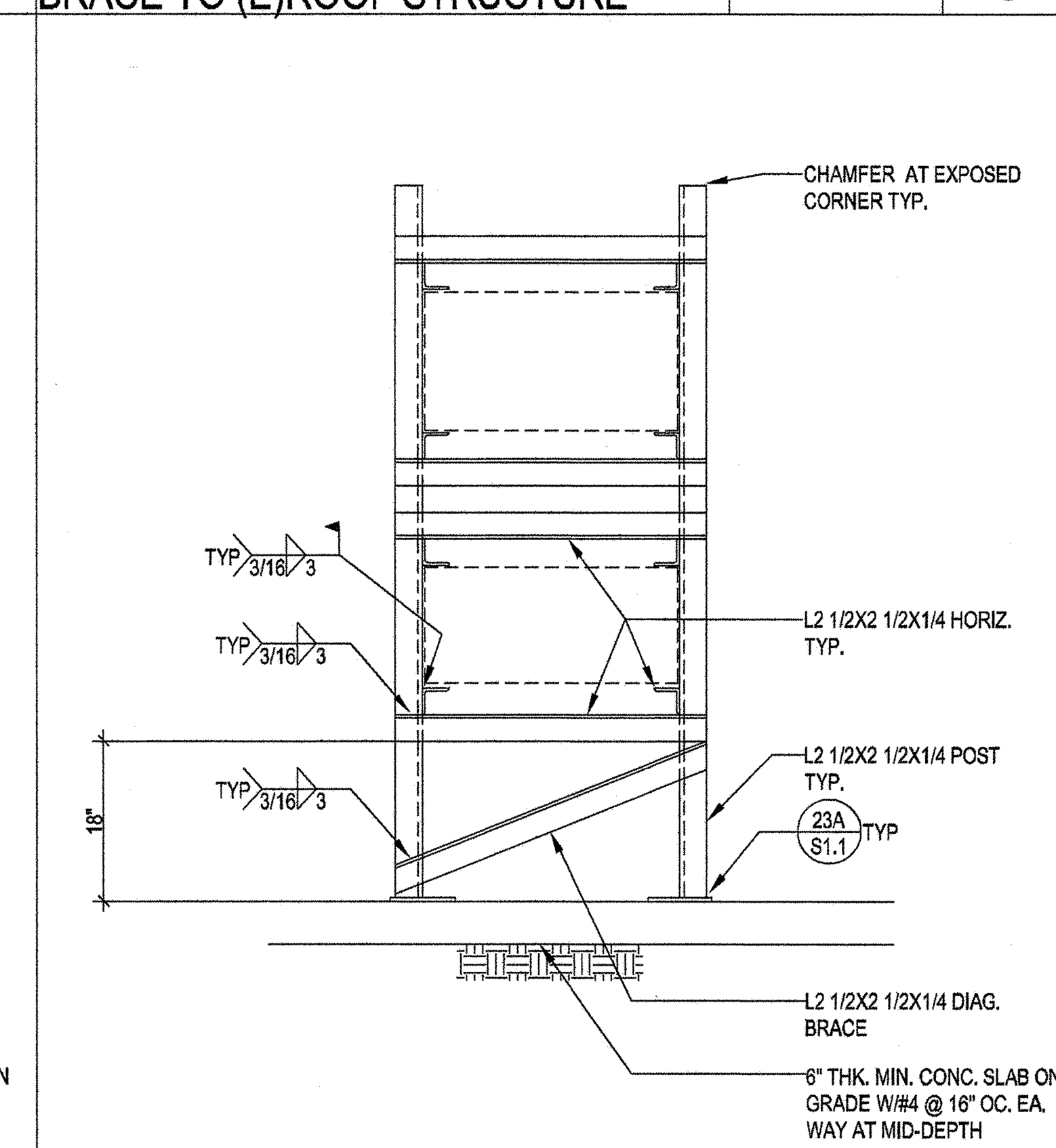

3/4"=1'-0" — 9

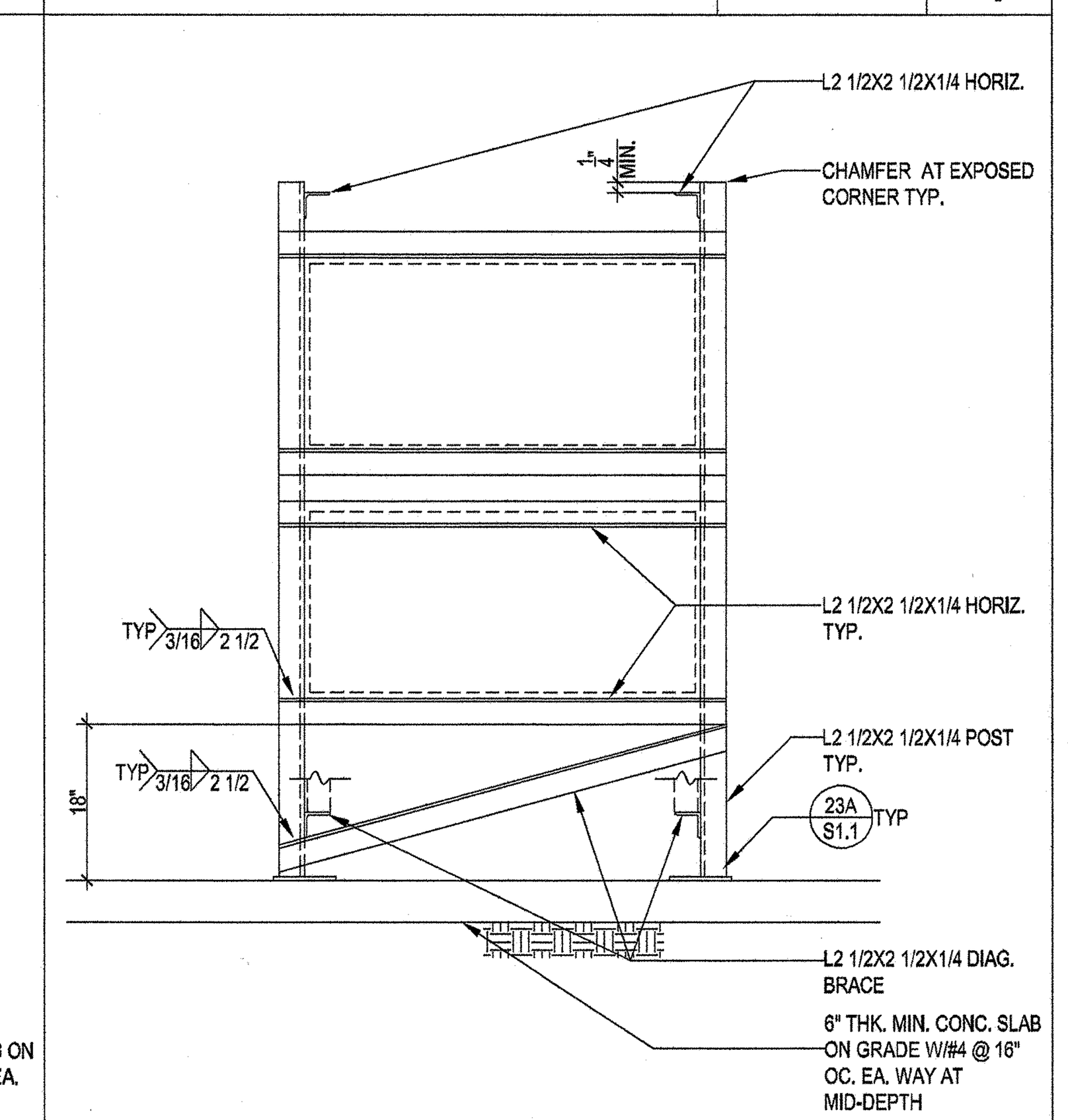

3/4"=1'-0" — 10

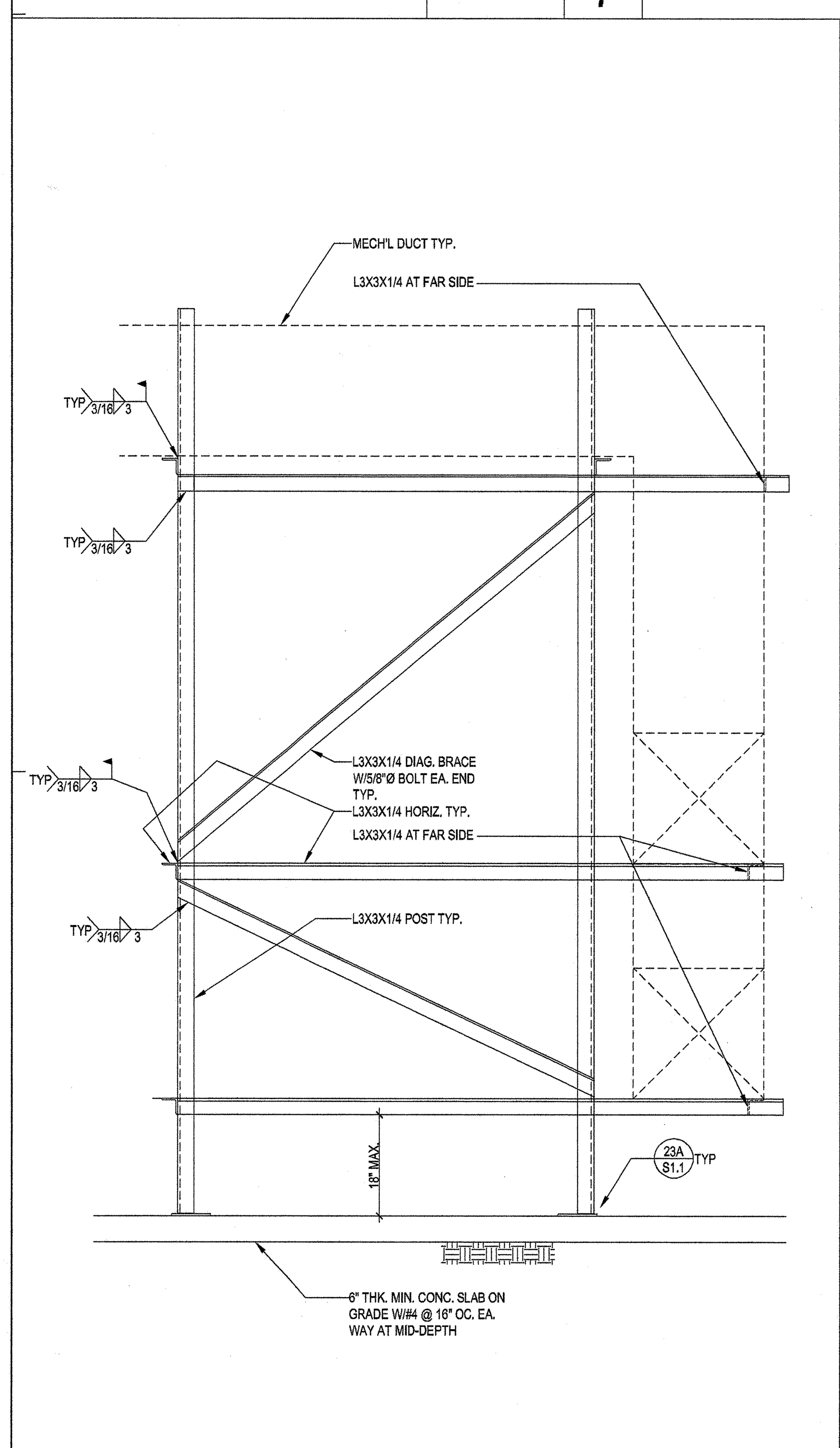

3/4"=1'-0" — 19

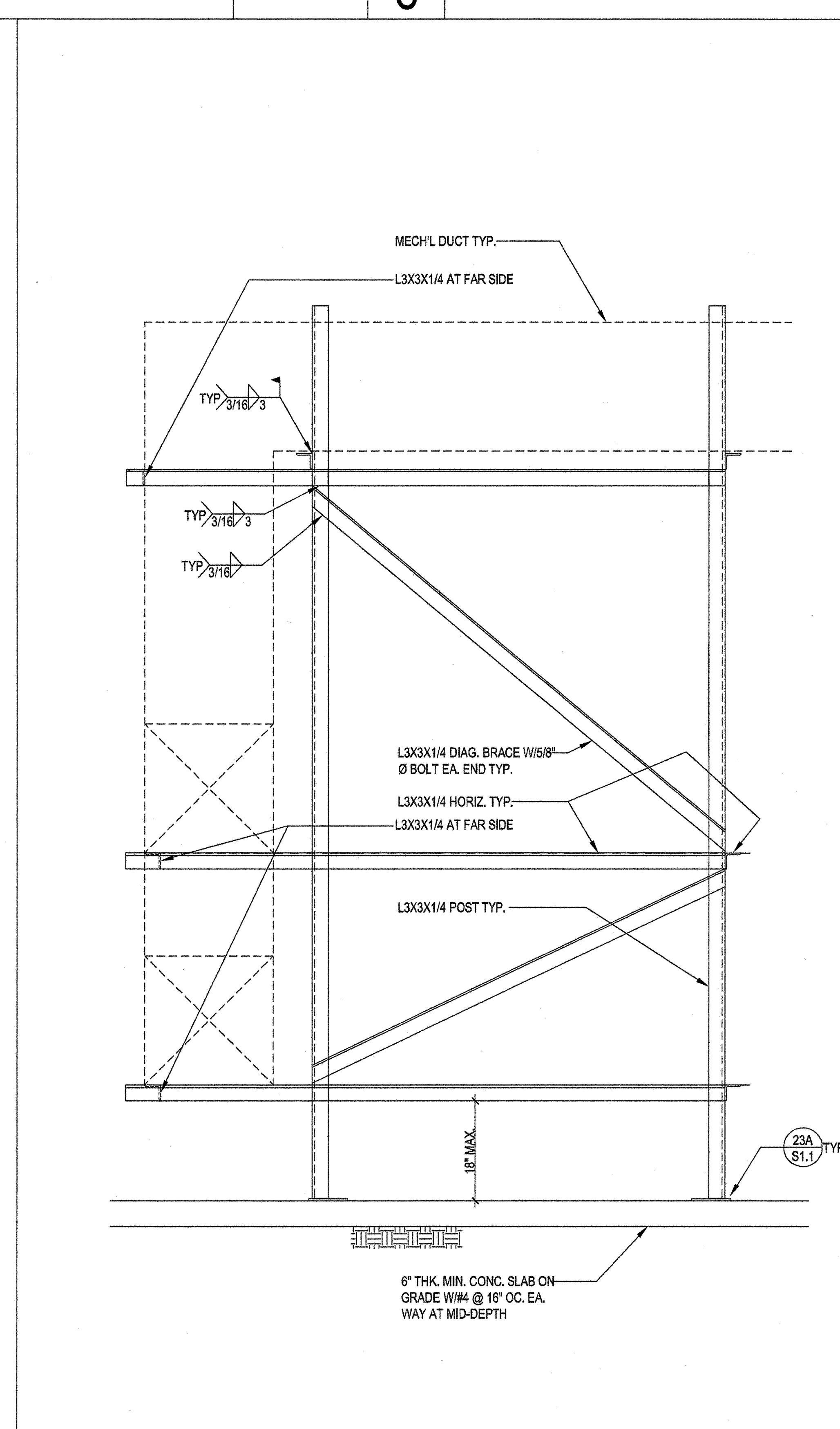

3/4"=1'-0" — 21

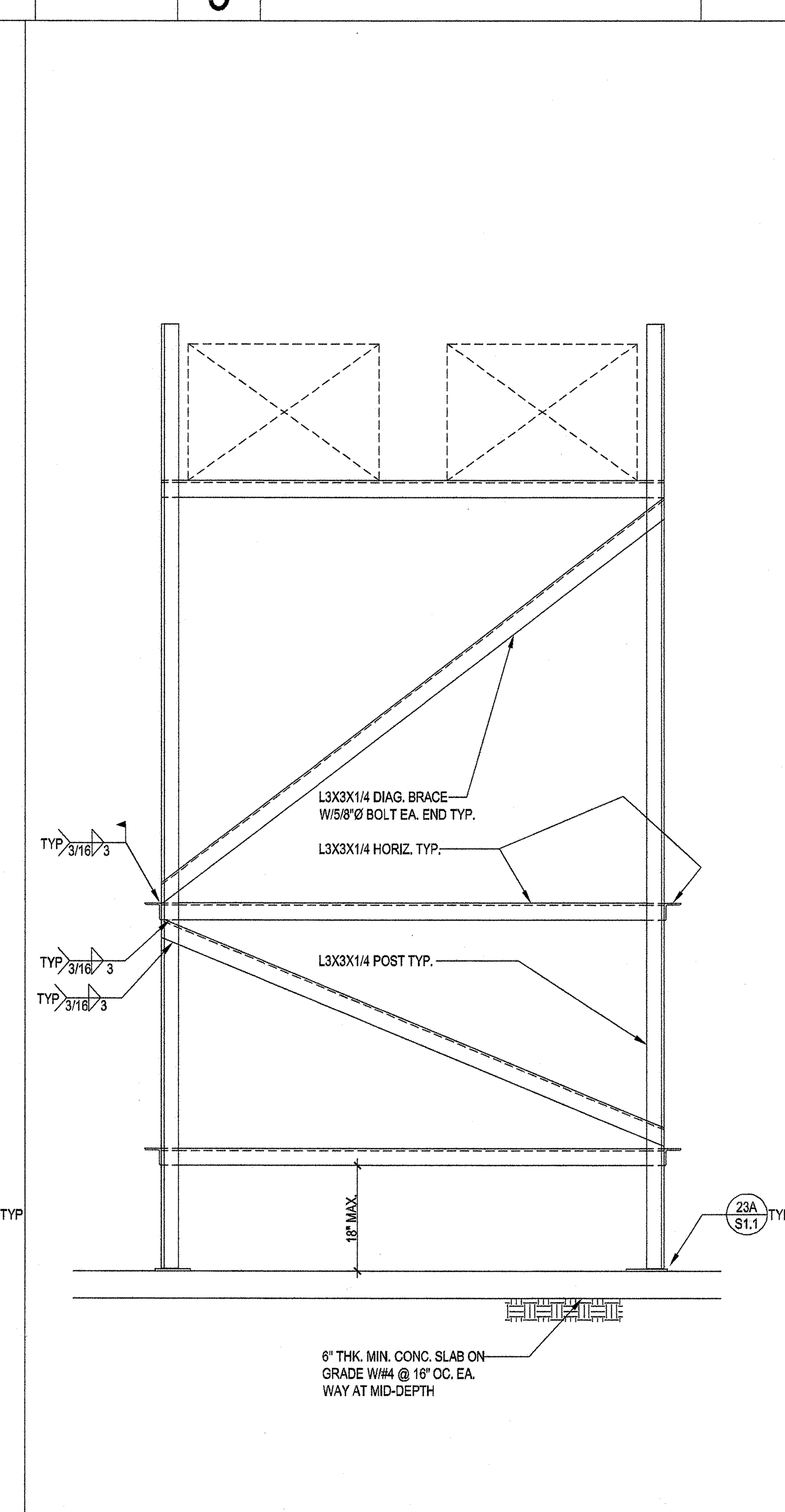

3/4"=1'-0" — 22

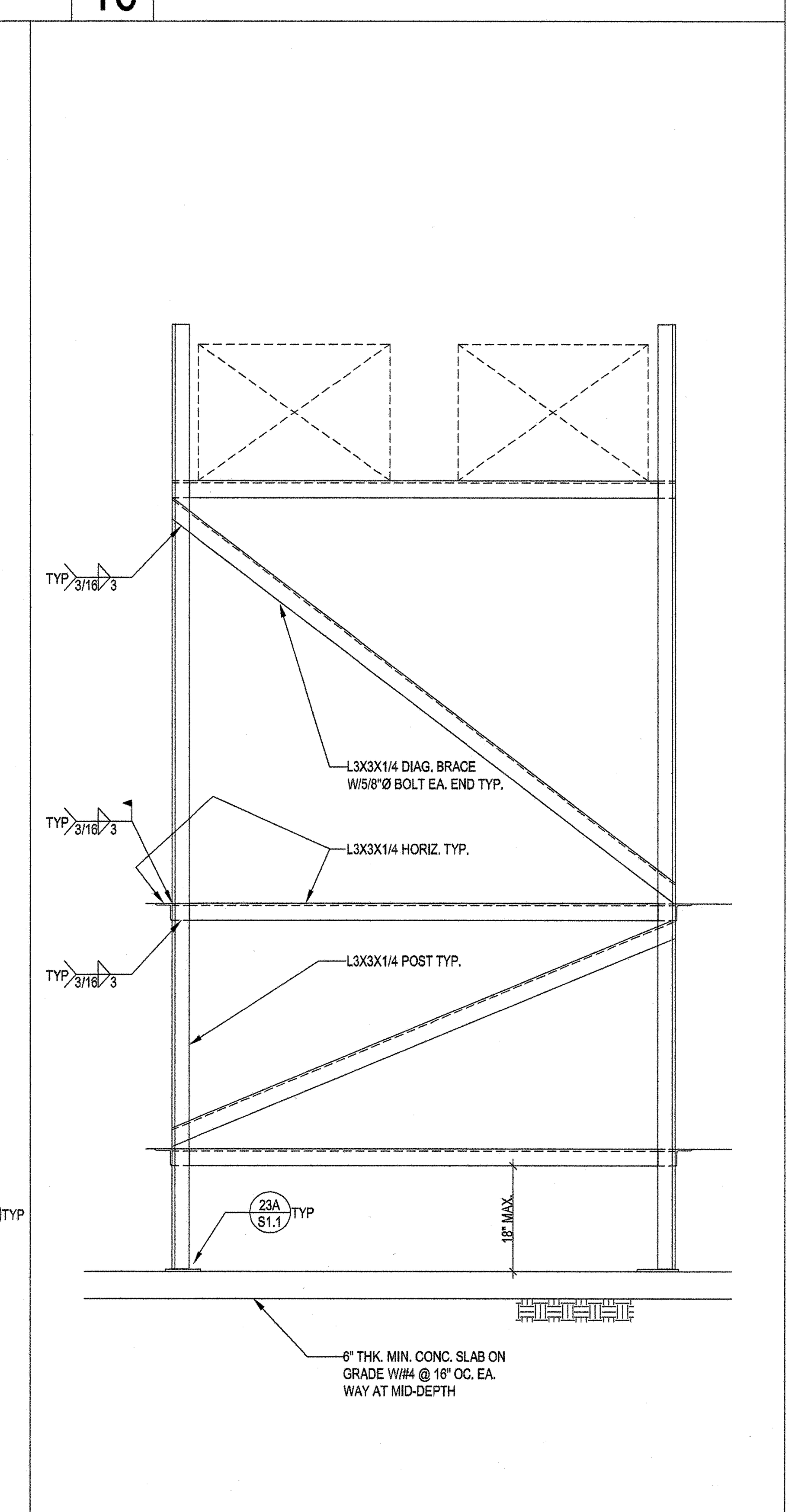

3/4"=1'-0" — 23

LUMBER

1. ALL STRUCTURAL LUMBER SHALL BE GRADED IN ACCORDANCE WITH THE "GRADING AND DRESSING RULES NO. 16 OF THE WEST COAST LUMBERMAN'S ASSOCIATION."
2. ALL WOOD BEARING ON CONCRETE WITHIN 4'-0" FROM GRADE SHALL BE PRESSURE TREATED DOUGLAS FIR.
3. ALL BOLT HOLES SHALL BE DRILLED 1/32" TO 1/16" OVERSIZED (11.1.2.2, '05 NDS)
4. STRUCTURAL MEMBERS SHALL NOT BE CUT FOR PIPES, ETC. UNLESS SPECIFICALLY NOTED OR DETAILED.
5. PROVIDE 2X SOLID BLOCKING BETWEEN JOISTS OR RAFTERS TO ALL SUPPORTS.
6. PROVIDE SOLID BLOCKING OR CROSS-BRIDGING AT 8'-0" O.C. MAXIMUM FOR ALL FLOOR JOISTS OVER (4") DEEP AND AT 10'0" O.C. MAXIMUM FOR ALL RAFTERS OVER (8") DEEP. LOCATE FIRST BLOCK AT MIDSPAN
7. ALL STRUCTURAL PLYWOOD SHALL BE STRUCTURAL GRADE WITH EXTERIOR GLUE CONFORMING TO PS 1-09.
8. IN HORIZONTAL PLYWOOD SHEATHING, NO PANEL SHALL BE LESS THAN 24 INCHES WIDE. IN VERTICAL PLYWOOD SHEATHING, NO PANEL SHALL BE LESS THAN 12 INCHES WIDE.
9. ALL BOLTS BEARING ON WOOD SHALL HAVE STANDARD CUT WASHERS UNDER HEAD AND NUT, UNLESS NOTED OTHERWISE.
10. ALL JOIST HANGERS SHALL BE "SIMPSON" OR APPROVED EQUAL. AND SHALL MATCH SUPPORTED MEMBER SIZE UNLESS OTHERWISE SHOWN ON DRAWINGS. THEY SHALL BE INSTALLED FOR MAXIMUM RATED LOADS.
11. PROVIDE 2X FIRE STOPS AT ALL INTERSECTIONS OF STUD WALLS AND/OR STUD PARTITIONS AT FLOOR, CEILING AND ROOF. FIRE STOPS AT A MAXIMUM SPACING OF 8'0" O.C. IN THE VERTICAL DIRECTION, PROVIDE 2X FIRE STOPS IN ALL FURRED SPACES, VERTICAL AND HORIZONTAL.
12. ALL STRUCTURAL LUMBER SHALL BE DOUGLAS FIR OF THE FOLLOWING GRADES UNLESS OTHERWISE NOTED:
    STUD, PLATES AND BLOCKING....................NO. 1
    BEAMS AND STRINGERS....................DENSE NO. 1
    POSTS AND MULLIONS....................SEL STRUCT
    JOISTS AND RAFTERS (2X6 AND LARGER)....................NO. 1
    (2X4 AND 3X4)....................NO. 1
    BEAMS (LESS THAN 4" IN WIDTH)....................NO. 1
    PLANK AND DECKING....................SEL COM
    SILL PLATES....................PRESSURE TREATED NO.1 OR BETTER
13. NAILING FOR 5/8" AND 3/4" PLYWOOD SHALL BE 10d PLYWOOD NAILS, 2-1/2" X #9 GAGE X 9/32" DIAMETER HEAD BARBED SHANK, EQUIVALENT.
14. MACHINE APPLIED NAILING: USE OF MACHINE NAILING IS SUBJECT TO A SATISFACTORY JOBSITE DEMONSTRATION FOR EACH PROJECT AND THE APPROVAL BY THE PROJECT ARCHITECT OR STRUCTURAL ENGINEER AND THE DIVISION OF THE STATE ARCHITECT. THE APPROVAL IS SUBJECT TO CONTINUED SATISFACTORY PERFORMANCE. MACHINE NAILING WILL NOT BE APPROVED IN 5/16" PLYWOOD. IF NAILHEADS PENETRATE THE OUTER PLY MORE THAN WOULD BE NORMAL FOR A HAND HAMMER OR IF MINIMUM ALLOWABLE EDGE DISTANCES ARE NOT MAINTAINED, THE PERFORMANCE WILL BE DEEMED UNSATISFACTORY.
15. ALL NAILS SHALL BE COMMON WIRE NAILS.
16. ALL NAILING SHALL COMPLY WITH TABLE 2304.9.1 OF THE 2013 EDITION OF THE C.B.C.
17. ALL LUMBER SHALL HAVE A MAXIMUM MOISTURE CONTENT OF 19 % (DRY) LUMBER
18. WHERE JOISTS ARE SUPPORTING MECHANICAL EQUIPMENT AND ARCHITECTURAL FEATURES, CONSULT MECHANICAL AND ARCHITECTURAL DRAWINGS FOR EQUIPMENT AND FEATURE LOADS.
19. PREDRILL HOLES AS NEEDED FOR ANY SIZE NAIL TO AVOID SPLITTING WOOD FRAMING MEMBERS.
20. NO SHOT PIN IS ALLOWED AT CURBS & EDGE OF SLABS
21. RETIGHTEN BOLTS BEFORE CLOSING-IN
22. EXTERIOR USE NAILS SHOULD BE CORROSIVE RESISTANCE

GENERAL

1. THE GENERAL CONTRACTOR SHALL VERIFY ALL DIMENSIONS AND SITE CONDITIONS BEFORE STARTING WORK. THE ARCHITECT SHALL BE NOTIFIED OF ANY DISCREPANCY BEFORE PROCEEDING WITH THE WORK.
2. DIMENSIONS SHALL TAKE PRECEDENCE OVER SCALES SHOWN ON DRAWINGS.
3. ALL WORK SHALL CONFORM TO THE MINIMUM STANDARDS OF THE 2013 EDITION OF THE CALIFORNIA BUILDING CODE AND TITLE 24 OF THE CALIFORNIA CODE OF REGULATIONS AND ANY OTHER REGULATIONS OVER ANY PORTION OF THE WORK, INCLUDING THE OCCUPATIONAL SAFETY AND HEALTH ADMINISTRATION, AND THOSE LISTED IN THESE NOTES AND SPECIFICATIONS.
4. SEE ARCHITECTURAL, ELECTRICAL, AND MECHANICAL DRAWINGS FOR PITS, TRENCHES, OPENINGS, DEPRESSIONS, ETC., NOT SHOWN ON THE STRUCTURAL DRAWINGS.
5. THE CONTRACT STRUCTURAL DRAWINGS AND SPECIFICATIONS REPRESENT THE FINISHED STRUCTURE. THEY DO NOT INDICATE THE METHOD OF CONSTRUCTION. THE CONTRACTOR SHALL PROVIDE ALL MEASURES NECESSARY TO PROTECT THE STRUCTURE DURING CONSTRUCTION. SUCH MEASURES SHALL INCLUDE, BUT NOT BE LIMITED TO BRACING, SHORING FOR LOADS DUE TO CONSTRUCTION EQUIPMENT, ETC. OBSERVATION VISITS TO THE SITE BY THE STRUCTURAL ENGINEER SHALL NOT INCLUDE THE INSPECTION OF THE ABOVE ITEMS.
6. CONTRACTOR SHALL INVESTIGATE SITE DURING CLEARING AND EARTHWORK OPERATIONS FOR FILLED EXCAVATIONS OR BURIED STRUCTURES SUCH AS CESSPOOLS, CISTERNS, FOUNDATIONS, ETC. IF ANY SUCH STRUCTURES ARE FOUND, STRUCTURAL AND GEOTECHNICAL ENGINEER SHALL BE NOTIFIED IMMEDIATELY.
7. CONSTRUCTION MATERIALS SHALL BE SPREAD OUT IF PLACED ON FRAMED FLOORS OR ROOF. LOAD SHALL NOT EXCEED THE DESIGN LIVE LOAD PER SQUARE FOOT. PROVIDE ADEQUATE SHORING AND OR BRACING WHERE STRUCTURE HAS NOT ATTAINED DESIGN STRENGTH.
8. DESIGN LOADS:

WIND DESIGN CRITERIA:
WIND SPEED.....Vult =110 mph (3S GUST)
EXPOSURE C
RISK CATEGORY : II
GCpi + 0.18

SEISMIC DESIGN:
RISK CATEGORY = II
Ie=1.00
S_S=1.675, S_1=0.615
SITE CLASS D
S_{DS}=1.116, S_{D1}=0.615
S_{MS}=1.675, S_{M1}= 0.923
SEISMIC DESIGN CATEGORY= D
ANALYSIS PROCEDURE = EQUIVALENT LATERAL FORCE PROCEDURE

CONCRETE

1. ALL CONCRETE SHALL CONFORM TO 2013 CBC, PART II (CCR).
2. CEMENT SHALL CONFORM TO A.S.T.M. (C-150) TYPE II/V.
3. ANCHOR BOLTS, DOWELS, INSERTS, ETC. SHALL BE SECURELY TIED IN PLACE PRIOR TO POURING CONCRETE.
4. CONCRETE SHALL BE CURED BY KEEPING CONTINUOUSLY WET FOR 10 DAYS OR BY AN APPROVED CURING COMPOUND.
5. REFER TO ARCHITECTURAL, MECHANICAL, ELECTRICAL AND PLUMBING DRAWINGS FOR MISCELLANEOUS ITEMS TO BE CAST INTO CONCRETE AND FOR FLOOR DEPRESSIONS, PITS, ETC.
6. MINIMUM CONCRETE COMPRESSIVE STRENGTHS AT 28 DAYS (MAX WATER/CEMENT RATIO = .45) WITH SLUMP =4" SHALL BE AS FOLLOWS:
   FOUNDATION....................3000 PSI (STONE)
   SLABS ON GRADE....................3000 PSI (STONE)
7. SLABS ON GRADE SHALL BE REINFORCED WITH #3 @ 16" O.C. EACH WAY UNLESS SPECIFICALLY NOTED.
8. ALL CONCRETE SHALL BE NORMAL WEIGHT CONCRETE EXCEPT AS NOTED.
9. CONCRETE PROPORTIONING SHALL BE BASED ON ACI 318-11 SECTION 5.3
10. 15% MAXIMUM FLY ASH MAY BE USE IN THE NORMAL WIEGHT CONCRETE MIX DESIGN. FLY ASH SHALL CONFORM TO ASTM C618 FOR CLASS N OR F.
11. ALL HEADED ANCHOR BOLTS SHALL CONFORM TO A.S.T.M. F1554 GR 36 OR A449 SPECIFICATION. ALL-THREAD RODS IN FOUNDATION SHALL CONFORM TO A.S.T.M. A36 SPECIFICATION.

REINFORCING STEEL

1. BAR REINFORCING SHALL CONFORM TO ASTM A-615 GRADE 60 DEFORMED FOR NO. 5 AND LARGER; NO. 4 AND SMALLER SHALL CONFORM TO GRADE 40.
2. WELDED WIRE FABRIC SHALL CONFORM TO ASTM A-185, FLAT SHEETS. KEEP REINFORCING AT MID-DEPTH OF SLAB-ON-GRADE.
3. DETAILS OF REINFORCEMENT SHALL BE IN ACCORDANCE WITH CHAPTER 7 OF AMERICAN CONCRETE INSTITUTE 315 UNLESS NOTED ON THIS DRAWING OR PER TITLE 24 CCR PART 2.
4. LAP BARS IN CONCRETE CONSTRUCTION SHALL BE IN ACCORDANCE WITH THE SCHEDULE GIVEN IN SHEET S1.0
5. LAPS OF WELDED FABRIC AT SPLICES SHALL NOT BE LESS THAN 8 INCHES.
6. REINFORCING STEEL DETAILING, BENDING AND PLACING SHALL BE IN ACCORDANCE WITH THE CONCRETE REINFORCING STEEL INSTITUTE "MANUAL OF STANDARD PRACTICE", LATEST EDITION.
7. ALL REINFORCING STEEL, ANCHOR BOLTS, DOWELS SHALL BE SECURELY TIED IN PLACE BEFORE PLACING CONCRETE.
8. SUBMIT REINFORCING SHOP DRAWINGS FOR REVIEW BY THE ARCHITECT BEFORE FABRICATION.
9. PROVIDE THE FOLLOWING MINIMUM CLEAR COVER OF CONCRETE OVER REINFORCING STEEL UNLESS OTHERWISE NOTED ON PLAN:

   ON EARTH SIDE WHEN PLACED AGAINST EARTH....................3"
   ON EARTH SIDE WHEN FORMED....................2"
   EXTERIOR WALL STEEL ABOVE GRADE....................2" (1 1/2" FOR #5 & SMALLER)
   INTERIOR WALL STEEL AND SUPPORTED SLABS....................3/4"
   TIED COLUMNS (STIRRUPS) ABOVE GRADE....................1-1/2"
   BEAMS (STIRRUPS) ABOVE GRADE....................1-1/2"
   WELDED WIRE FABRIC....................CENTER LINE OF SLAB

EXPANSION ANCHORS

EXPANSION ANCHOR SHALL BE OF TYPE HILTI KWIK BOLT TZ (ESR-1917)

TEST VALUES FOR HARDROCK OR LIGHTWEIGHT CONCRETE	
ANCHOR DIAM.	WEDGE ANCHOR TORQUE VALUE
inches	ft-lbs
3/8"Ø	25
1/2"Ø	40
5/8"Ø	60
3/4"Ø	110

NOTES

1. TEST INSTALLED ANCHORS PER SECTION 1916A.7
2. THE FOLLOWING CRITERIA APPLY FOR THE ACCEPTANCE OF INSTALLED ANCHORS:

A. TORQUE WRENCH METHOD: THE APPLICABLE TEST TORQUE MUST BE REACHED WITHIN THE FOLLOWING LIMITS:

I. WEDGE OR SLEEVE TYPE: ONE-HALF (1/2) TURN OF THE NUT.

II. ONE-QUARTER (1/4) TURN OF THE NUT FOR THE 3/8 IN. SLEEVE ANCHOR ONLY.

3. IF THE MANUFACTURER'S RECOMMENDED INSTALLATION TORQUE IS LESS THAN THE TEST TORQUE NOTED IN THE TABLE, THE MANUFACTURER'S RECOMMENDED INSTALLATION TORQUE SHOULD BE USED IN LIEU OF THE TABULATED VALUES.

WLC ARCHITECTS
CLIENT FOCUSED • PASSION DRIVEN
SOUTHERN CALIFORNIA
8163 ROCHESTER AVENUE, SUITE 100
RANCHO CUCAMONGA
CALIFORNIA 91730-0729
TEL: 909-987-0909
www.wlcarchitects.com

LONGFELOW ELEMENTARY SCHOOL HVAC REPLACEMENT

COMTON UNIFIED SCHOOL DISTRICT
1101 STANFORD AVE.
COMPTON, CA. 90220

LICENSED ARCHITECT — MARK GRAHAM — C-26046 — 03-31-19 — STATE OF CALIFORNIA

REGISTERED PROFESSIONAL ENGINEER — PETER TRAN — No. 4628 — Exp. 6-30-19 — STRUCTURAL — STATE OF CALIFORNIA

CONSULTANT
K.B. LEUNG & ASSOCIATES
STRUCTURAL ENGINEERS
9320 BASELINE ROAD, SUITE D
ALTA LOMA, CA 91701
(909) 944 - 0029 PHONE
(909) 944 - 7983 FAX

IDENTIFICATION STAMP
DIV. OF THE STATE ARCHITECT
OFFICE OF REGULATION SERVICES
APPL 03-118423
AC — FLS — SS EY
DATE MAR 0 6 2018
FILE: 19-23

NO	DATE	BY	DESCRIPTION
#	REVISIONS		

DRAWN: IDK	CHECKED: PT
DATE: 10/20/17	SCALE: AS NOTED
PROJECT NUMBER: 1723400	

GENERAL NOTES & DETAILS

DRAWING NUMBER: S1.0

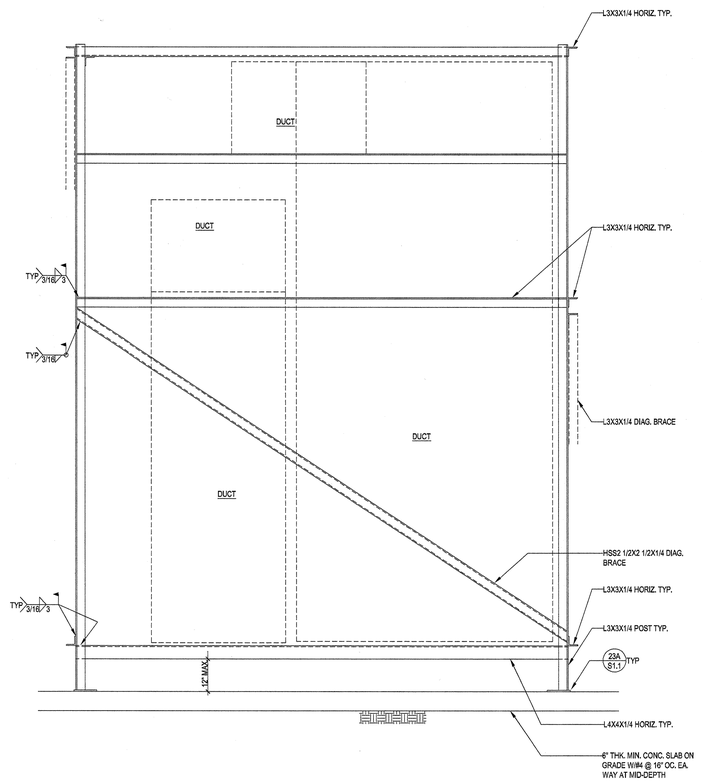

3/4"=1'-0" 8

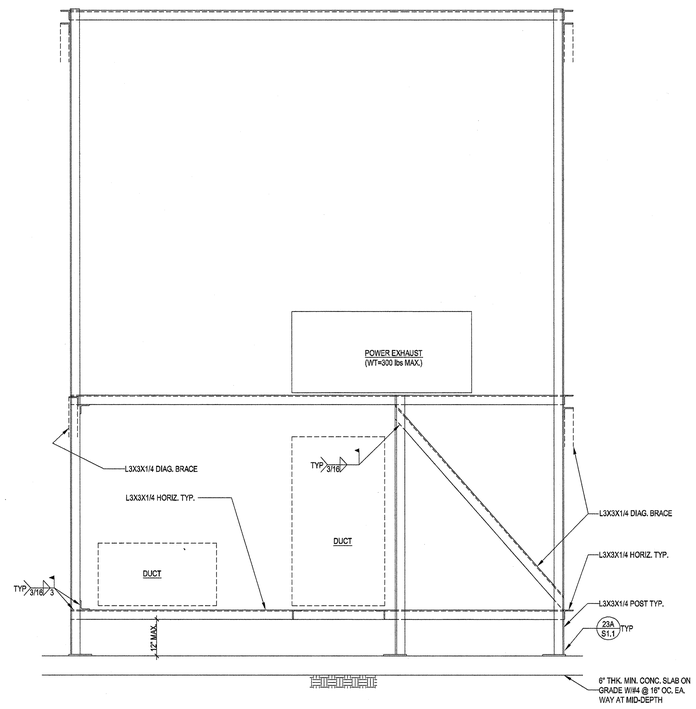

3/4"=1'-0" 10

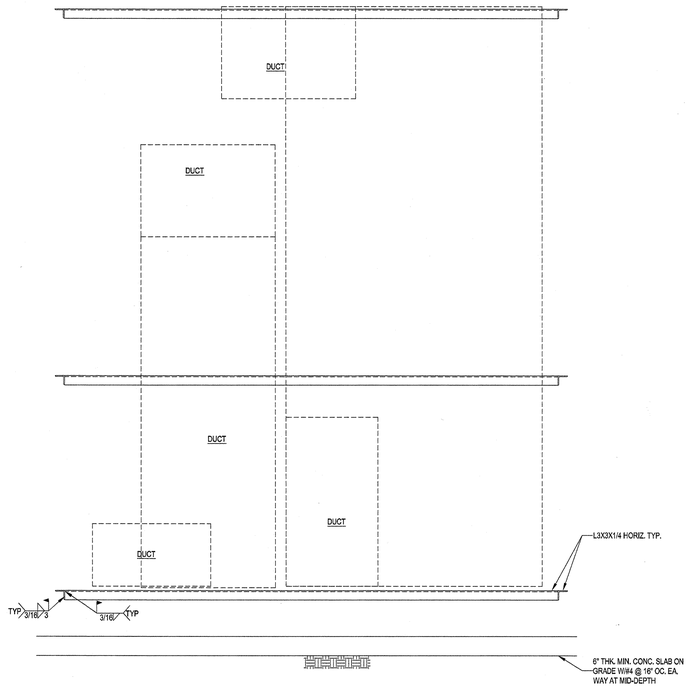

3/4"=1'-0" 12

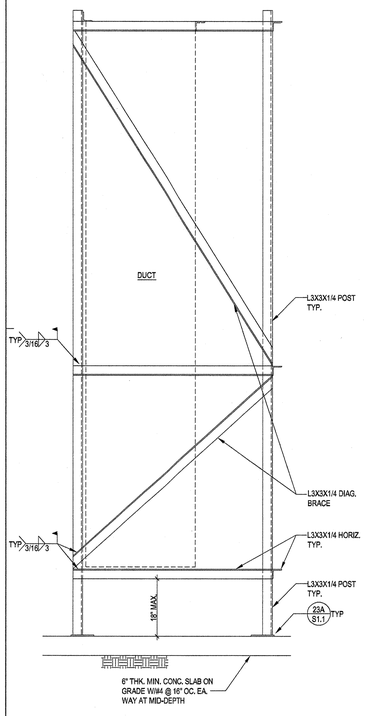

3/4"=1'-0" 19

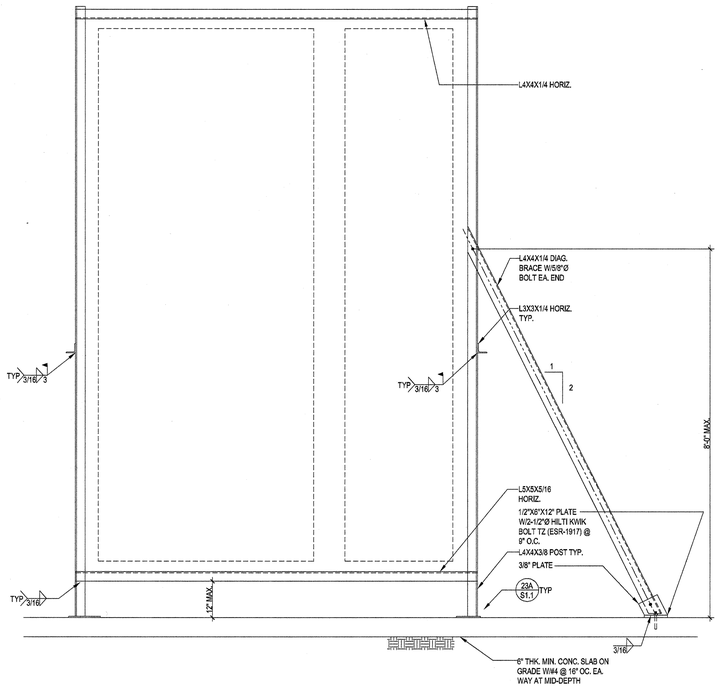

3/4"=1'-0" 21

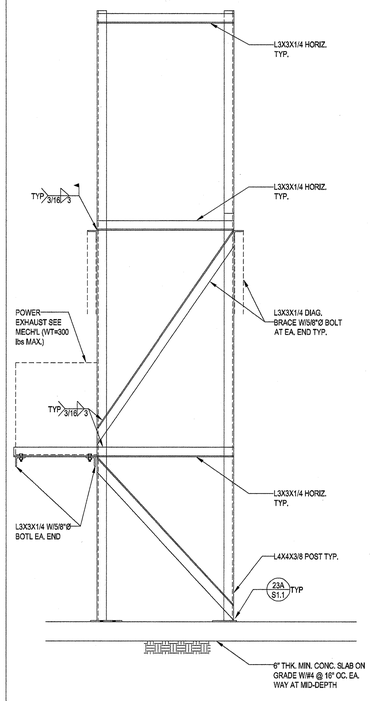

3/4"=1'-0" 22

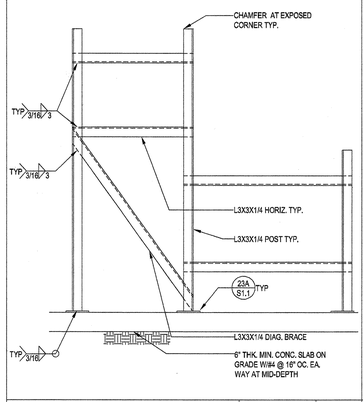

3/4"=1'-0" 17

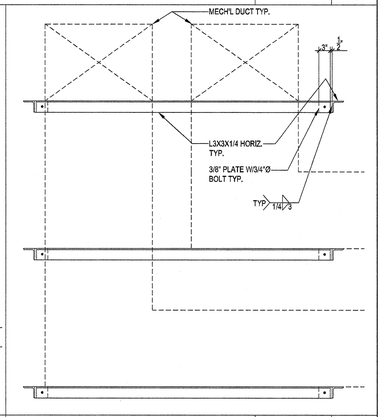

3/4"=1'-0" 18

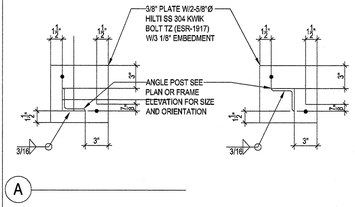

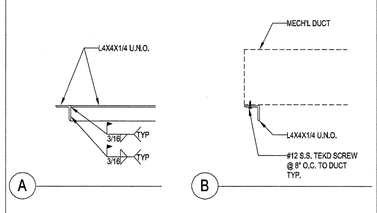

3/4"=1'-0" 23

3/4"=1'-0" 24

ARCHITECTS
WLC
CLIENT FOCUSED • PASSION DRIVEN

SOUTHERN CALIFORNIA
8163 ROCHESTER AVENUE, SUITE 100
RANCHO CUCAMONGA
CALIFORNIA 91730-0729

TEL: 909-987-0909

www.wlcarchitects.com

LONGFELLOW ELEMENTARY SCHOOL HVAC REPLACEMENT

COMTON UNIFIED SCHOOL
1101 BISSELL AVE.
COMPTON, CA. 90220

LICENSED ARCHITECT
MARK GRAHAM
C-26046
03-31-19
STATE OF CALIFORNIA

REGISTERED PROFESSIONAL ENGINEER
PETER TRAN
No. 4628
Exp. 6-30-19
STRUCTURAL
STATE OF CALIFORNIA

CONSULTANT
K.B. LEUNG & ASSOCIATES
STRUCTURAL ENGINEERS
9320 BASELINE ROAD, SUITE D
ALTA LOMA, CA. 91701
(909) 944 - 0029 PHONE
(909) 944 - 7883 FAX

IDENTIFICATION STAMP
DIV. OF THE STATE ARCHITECT
OFFICE OF REGULATION SERVICES
APPL 03-118423
AC. — FLS — SS EY
DATE MAR 0 8 2018
FILE: 19-23

NO	DATE	BY	DESCRIPTION
			REVISIONS

DRAWN: IDK	CHECKED: PT
DATE: 10/20/17	SCALE: AS NOTED
PROJECT NUMBER: 1723400	

DETAILS

DRAWING NUMBER: S1.1

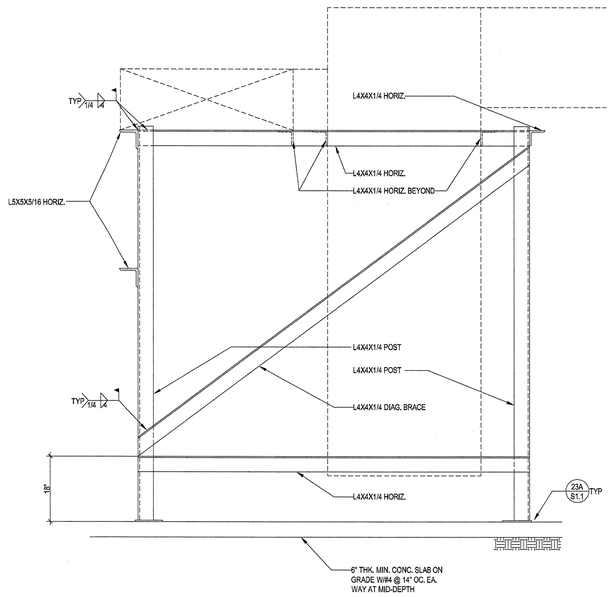

3/4"=1'-0" 8

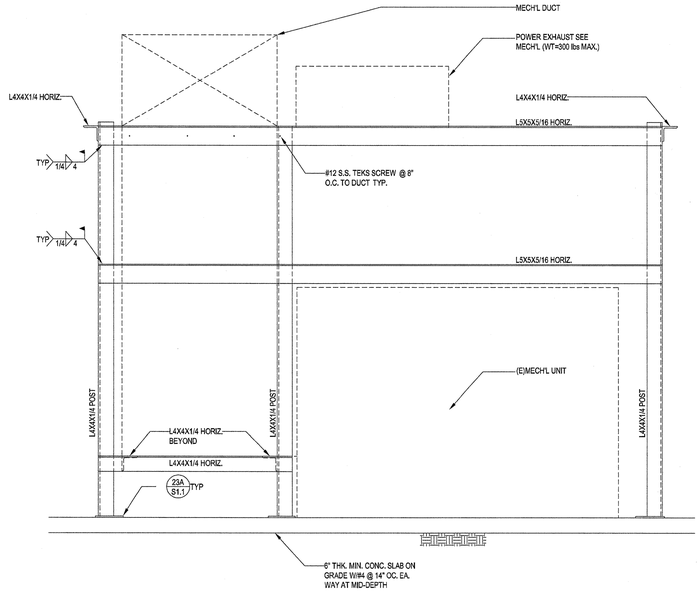

3/4"=1'-0" 10

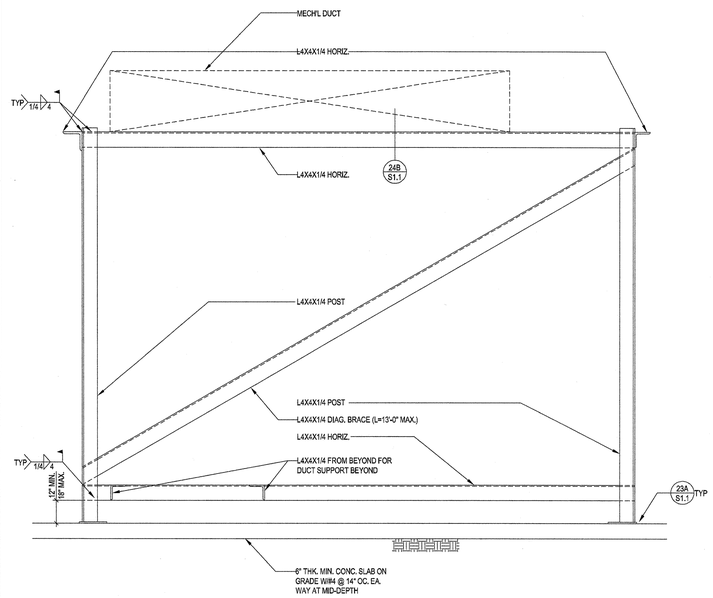

3/4"=1'-0" 12

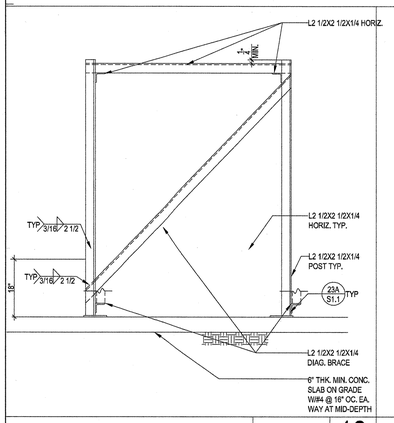

3/4"=1'-0" 13

3/4"=1'-0" 17

3/4"=1'-0" 18

3/4"=1'-0" 21

3/4"=1'-0" 19

3/4"=1'-0" 21

3/4"=1'-0" 22

3/4"=1'-0" 23

3/4"=1'-0" 24

WLC ARCHITECTS
CLIENT FOCUSED • PASSION DRIVEN

SOUTHERN CALIFORNIA
8163 ROCHESTER AVENUE, SUITE 100
RANCHO CUCAMONGA
CALIFORNIA 91730-0729
TEL: 909-987-0909
www.wlcarchitects.com

LONGFELOW ELEMENTARY SCHOOL HVAC REPLACEMENT

COMTON UNIFIED SCHOOL
1101 DISTRICT AVE.
COMPTON, CA. 90220

LICENSED ARCHITECT MARK GRAHAM C-26046 03-31-19 STATE OF CALIFORNIA

REGISTERED PROFESSIONAL ENGINEER PETER TRAN No. 4628 Exp. 6-30-19 STRUCTURAL STATE OF CALIFORNIA

CONSULTANT
K.B. LEUNG & ASSOCIATES
STRUCTURAL ENGINEERS
9320 BASELINE ROAD, SUITE D
ALTA LOMA, CA 91701
(909) 944 - 0029 PHONE
(909) 944 - 7983 FAX

IDENTIFICATION STAMP
DIV. OF THE STATE ARCHITECT
OFFICE OF REGULATION SERVICES
APPL 03-118423
AC — FLS — SS EY
DATE MAR 0 6 2018
FILE: 19-23

NO	DATE	BY	DESCRIPTION
#	REVISIONS		

DRAWN: IDK	CHECKED: PT
DATE: 10/20/17	SCALE: AS NOTED
PROJECT NUMBER: 1723400	

DETAILS

DRAWING NUMBER: S1.2

NOTES:

1. ALL DUCT SUPPORTED BY STEEL ANGLE SHALL BE FASTENED BY #12-24 TEKS SCREW (ESR-1976) @ 12" MAX. O.C. FROM STEEL ANGLE INTO DUCT.
2. PROVIDE #12-24 TEKS SCREW (ESR-1967) @ 8" MAX. O.C. TO ALL POWER EXHAUST.

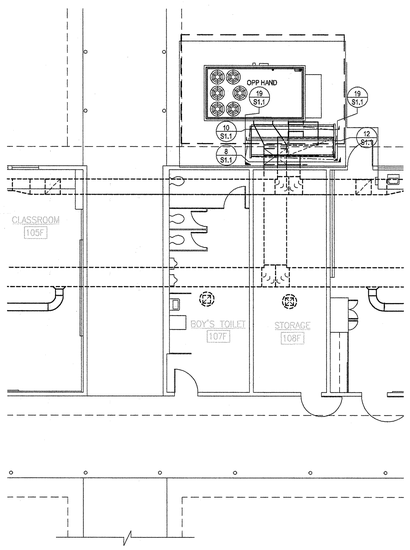

BLD'G C

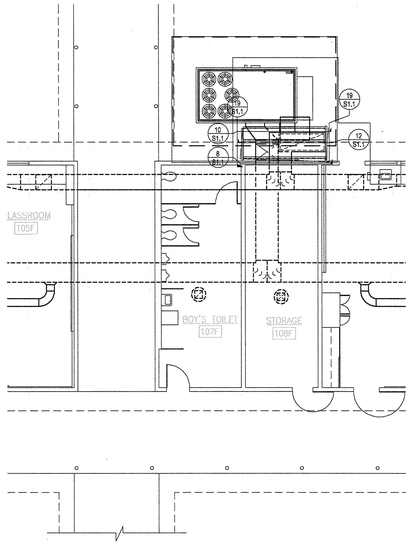

BLD'G F

PARTIAL BUILDING C & F FLOOR PLAN

1/8"=1'-0" | 1

NOTES:

1. ALL DUCT SUPPORTED BY STEEL ANGLE SHALL BE FASTENED BY #12-24 TEKS SCREW (ESR-1976) @ 12" MAX. O.C. FROM STEEL ANGLE INTO DUCT.
2. PROVIDE #12-24 TEKS SCREW (ESR-1967) @ 8" MAX. O.C. TO ALL POWER EXHAUST.

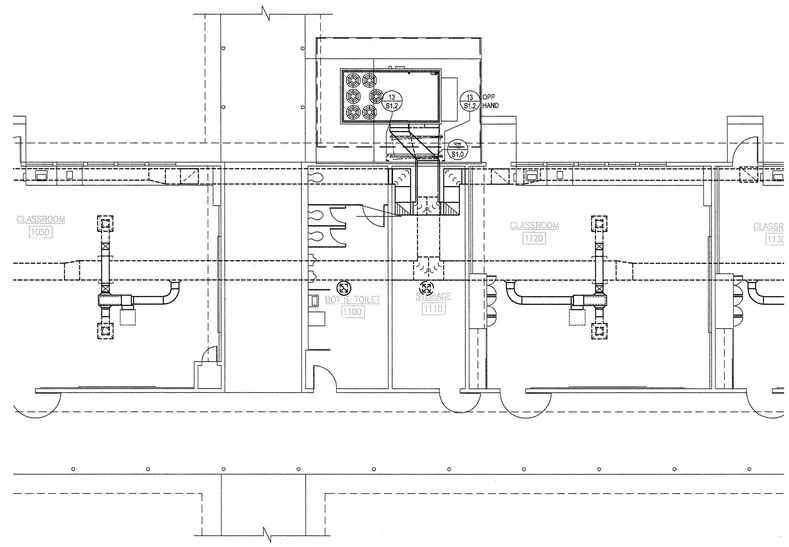

PARTIAL BUILDING D FLOOR PLAN

1/8"=1'-0" | 2

NOTES:

1. ALL DUCT SUPPORTED BY STEEL ANGLE SHALL BE FASTENED BY #12-24 TEKS SCREW (ESR-1976) @ 12" MAX. O.C. FROM STEEL ANGLE INTO DUCT.
2. PROVIDE #12-24 TEKS SCREW (ESR-1967) @ 8" MAX. O.C. TO ALL POWER EXHAUST.

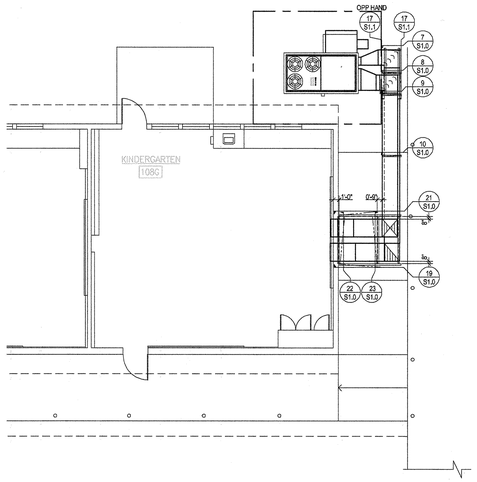

PARTIAL BUILDING G FLOOR PLAN

1/8"=1'-0" | 3

NOTES:

1. ALL DUCT SUPPORTED BY STEEL ANGLE SHALL BE FASTENED BY #12-24 TEKS SCREW (ESR-1976) @ 12" MAX. O.C. FROM STEEL ANGLE INTO DUCT.
2. PROVIDE #12-24 TEKS SCREW (ESR-1967) @ 8" MAX. O.C. TO ALL POWER EXHAUST.

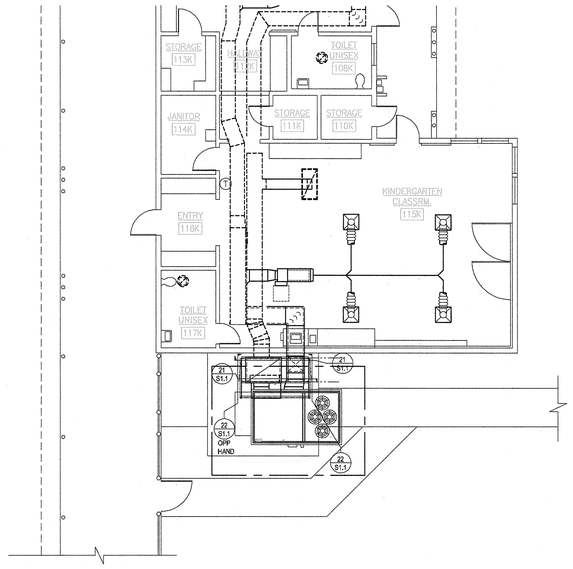

PARTIAL BUILDING K FLOOR PLAN

1/8"=1'-0" | 4

NOTES:

1. ALL DUCT SUPPORTED BY STEEL ANGLE SHALL BE FASTENED BY #12-24 TEKS SCREW (ESR-1976) @ 12" MAX. O.C. FROM STEEL ANGLE INTO DUCT.
2. PROVIDE #12-24 TEKS SCREW (ESR-1967) @ 8" MAX. O.C. TO ALL POWER EXHAUST.

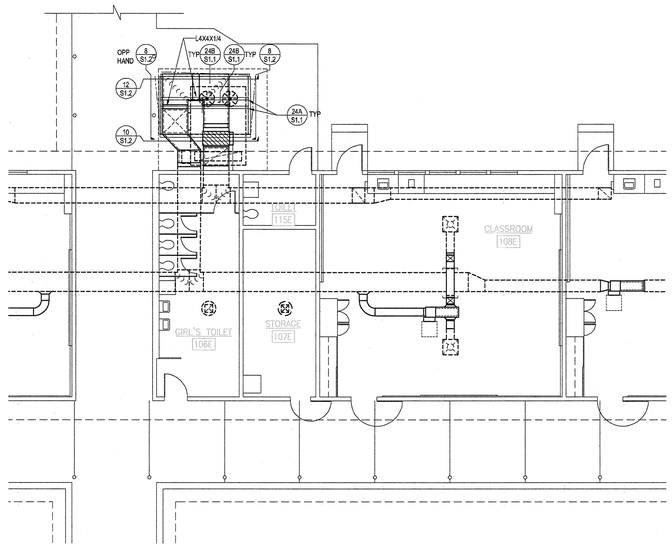

PARTIAL BUILDING E FLOOR PLAN

1/8"=1'-0" | 5

ARCHITECTS
WLC
CLIENT FOCUSED • PASSION DRIVEN

SOUTHERN CALIFORNIA
8163 ROCHESTER AVENUE, SUITE 100
RANCHO CUCAMONGA
CALIFORNIA 91730-0729

TEL: 909-987-0909

www.wlcarchitects.com

LONGFELOW ELEMENTARY SCHOOL HVAC REPLACEMENT

COMTON UNIFIED SCHOOL DISTRICT
1101 BULLIS AVE.
COMPTON, CA. 90220

LICENSED ARCHITECT
MARK GRAHAM
C-26046
03-31-19
STATE OF CALIFORNIA

REGISTERED PROFESSIONAL ENGINEER
PETER TRAN
No. 4628
Exp. 6-30-19
STRUCTURAL
STATE OF CALIFORNIA

CONSULTANT
K.B. LEUNG & ASSOCIATES
STRUCTURAL ENGINEERS
9330 BASELINE ROAD, SUITE D
ALTA LOMA, CA 91701
(909) 944 - 0029 PHONE
(909) 944 - 7983 FAX

IDENTIFICATION STAMP
DIV. OF THE STATE ARCHITECT
OFFICE OF REGULATION SERVICES
APPL 03-118423
AC ___ FLS ___ SS BY
DATE AUG 0 6 2018

FILE: 19-23

NO	DATE	BY	DESCRIPTION
1			REVISIONS

DRAWN: IDK	CHECKED: PT
DATE: 10/20/17	SCALE: AS NOTED
PROJECT NUMBER: 1723400	

BLD'G C, D, F, G, K
PARTIAL FLOOR PLAN

DRAWING NUMBER: S2.1

GENERAL NOTES

----- GENERAL NOTES -----

1. ENTIRE INSTALLATION SHALL CONFORM TO THE REQUIREMENTS OF THE 2016 CALIFORNIA MECHANICAL CODE, 2016 CALIFORNIA BUILDING CODE, AND ALL OTHER APPLICABLE CODES AND REGULATIONS, INCLUDING 2016 BUILDING ENERGY EFFICIENCY STANDARDS DIVISION T-24.

2. 2016 CALIFORNIA GREEN BUILDING STANDARDS (CALGREEN) CODE INCLUDING THE APPLICABLE MANDATORY MEASURES:

   - 5.201.1 CALIFORNIA ENERGY CODE. FOR THE PURPOSES OF MANDATORY ENERGY EFFICIENCY STANDARDS IN THIS CODE, THE CALIFORNIA ENERGY COMMISSION WILL CONTINUE TO ADOPT MANDATORY STANDARDS.
   - 5.504.3: COVERING OF DUCT OPENINGS AND PROTECTION OF MECHANICAL EQUIPMENT DURING CONSTRUCTION. AT THE TIME OF ROUGH INSTALLATION AND DURING STORAGE ON THE CONSTRUCTION SITE UNTIL FINAL STARTUP OF THE HEATING, COOLING AND VENTILATING EQUIPMENT, ALL DUCT AND OTHER RELATED AIR DISTRIBUTION COMPONENT OPENINGS SHALL BE COVERED WITH TAPE, PLASTIC, SHEET METAL OR OTHER METHODS ACCEPTABLE TO THE ENFORCING AGENCY TO REDUCE THE AMOUNT OF DUST, WATER AND DEBRIS WHICH MAY ENTER THE SYSTEM.
   - 5.504.5.3.1 FILTERS. IN MECHANICALLY VENTILATED BUILDINGS, PROVIDE REGULARLY OCCUPIED AREAS OF THE BUILDING WITH AIR FILTRATION MEDIA FOR OUTSIDE AND RETURN AIR PRIOR TO OCCUPANCY THAT PROVIDES AT LEAST A MINIMUM EFFICIENCY REPORTING VALUE (MERV) OF 8. MERV 8 FILTERS SHALL BE INSTALLED PRIOR TO OCCUPANCY AND RECOMMENDATIONS FOR MAINTENANCE WITH FILTERS OF THE SAME VALUE SHALL BE INCLUDED IN THE OPERATION AND MAINTENANCE MANUAL. EXCEPTIONS:
     - a. AN ASHRAE 10-PERCENT TO 30-PERCENT EFFICIENCY FILTER SHALL BE PERMITTED FOR AN HVAC UNIT MEETING THE 2016 CALIFORNIA ENERGY CODE HAVING 60,000 BTU/H OR LESS CAPACITY PER FAN COIL, IF THE ENERGY USE OF THE AIR DELIVERY SYSTEM IS 0.4 W/CFM OR LESS AT THE DESIGN AIR FLOW.
     - b. EXISTING MECHANICAL EQUIPMENT.
   - 5.506.1 OUTSIDE AIR DELIVERY. FOR MECHANICALLY OR NATURALLY VENTILATED SPACES IN BUILDINGS, MEET THE MINIMUM REQUIREMENTS OF SECTION 121 (REQUIREMENTS FOR VENTILATION) OF THE 2016 CALIFORNIA ENERGY CODE, OR THE APPLICABLE LOCAL CODE, WHICHEVER IS MORE STRINGENT, AND DIVISION 1, CHAPTER 4 OF CCR, TITLE 8.
   - 5.508.1 OZONE DEPLETION AND GREENHOUSE GAS REDUCTIONS. INSTALL HVAC AND REFRIGERATION AND FIRE SUPPRESSION EQUIPMENT SHALL COMPLY WITH 5.508.1.1 AND 5.508.1.2.
   - 5.508.1.1 CHLOROFLUOROCARBONS (CFCS). INSTALL HVAC, REFRIGERATION AND FIRE SUPPRESSION EQUIPMENT THAT DO NOT CONTAIN CFCS.
   - 5.508.1.2 HALONS. INSTALL HVAC, REFRIGERATION AND FIRE SUPPRESSION EQUIPMENT THAT DO NOT CONTAIN HALONS.
   - ADHESIVES, SEALANTS AND CAULKS SHALL MEET CALGREEN REQUIREMENTS.
   - INSTALLER AND SPECIAL INSPECTORS SHALL MEET ALL QUALIFICATIONS LISTED IN SECTION 702 OF THE 2016 CALIFORNIA GREEN BUILDING STANDARDS CODE.

3. COORDINATE ENTIRE INSTALLATION OF THE HVAC SYSTEM WITH THE WORK OF ALL OTHER TRADES PRIOR TO ANY FABRICATION OR INSTALLATION. PROVIDE ALL FITTINGS, OFFSETS, AND TRANSITIONS AS REQUIRED FOR A COMPLETE WORKABLE INSTALLATION. THE MECHANICAL CONTRACTOR SHALL BE RESPONSIBLE TO COORDINATE ITEMS TO BE PROVIDED BY OTHER TRADES WHERE MENTIONED IN THE CONTRACT DOCUMENTS PRIOR TO BID – NO EXCEPTIONS.
4. COORDINATE THE LOCATIONS OF ALL CEILING DIFFUSERS, REGISTERS, AND GRILLES WITH THE ARCHITECTURAL REFLECTIVE CEILING PLAN, ELECTRICAL LIGHTING LAYOUT AND ARCHITECTURAL ROOM ELEVATIONS. THE ARCHITECT AND ENGINEER SHALL BE IMMEDIATELY NOTIFIED OF ANY CONFLICTS PRIOR TO FABRICATION AND INSTALLATION.
5. CONTRACTOR SHALL NOTIFY OWNER AND ENGINEER OF CONSTRUCTION PHASING PRIOR TO START OF CONSTRUCTION, REMOVAL, AND/OR REPLACEMENT OF ANY EQUIPMENT. CONTRACTOR SHALL RECEIVE PERMISSION IN WRITING PRIOR TO THE START OF ANY WORK DURING ANY PHASE FOR WORK SHOWN HEREIN. IT SHALL BE THE RESPONSIBILITY OF THE CONTRACTOR TO CONDUCT WORK AND ARRANGE HIS WORK IN A MANNER THAT WILL CAUSE MINIMAL INTERFERENCE WITH DAILY FUNCTIONS WITHIN THE FACILITY. ANY EXPECTED DOWNTIME SHALL BE COORDINATED WITH THE OWNER.
6. ALL EQUIPMENT, DUCTS, PIPING, AND OTHER DEVICES AND MATERIALS INSTALLED OUTSIDE OF THE BUILDING OR OTHERWISE EXPOSED TO THE WEATHER SHALL BE COMPLETELY WEATHER-PROOFED AND PAINTED TO MATCH, COORDINATE WITH ARCHITECT PRIOR TO PAINTING.
7. THE OWNER ACKNOWLEDGES THAT THE DESIGN PROFESSIONAL'S PLANS ARE INSTRUMENTS OF PROFESSIONAL SERVICE. NEVERTHELESS, THE PLANS PREPARED UNDER THIS AGREEMENT SHALL BECOME THE PROPERTY OF THE OWNER UPON COMPLETION OF THE WORK. THE OWNER AGREES TO HOLD HARMLESS AND INDEMNIFY THE DESIGN PROFESSIONAL AGAINST ALL DAMAGES, CLAIMS AND LOSSES, INCLUDING DEFENSE COSTS, ARISING OUT OF ANY RESCUE OF THE PLANS WITHOUT THE WRITTEN AUTHORIZATION OF THE DESIGN PROFESSIONAL.
8. ALL DIMENSIONS SHOWN ON THESE PLANS ARE APPROXIMATE AND MUST BE CONFIRMED ON SITE.
9. PRIOR TO OCCUPANCY, THE ENTIRE H.V.A.C. SYSTEMS SHALL BE BALANCED IN ACCORDANCE WITH (AABC) ASSOCIATED AIR BALANCE COUNCIL STANDARDS BY AN INDEPENDENT AIR BALANCE CONTRACTOR. CERTIFICATION SHALL BE PROVIDED BY THE CONTRACTOR FOR AIR AND HYDRONIC AS APPLICABLE. SYSTEMS SHALL BE BALANCED AS INDICATED ON PLANS INCLUDING FRESH AIR VENTILATION. WHERE THERE IS A CONFLICT WITH THE MECHANICAL PLANS, THE AIR BALANCE CONTRACTOR SHALL NOTIFY THE ENGINEER PRIOR TO BALANCING OF SYSTEM. IF NOT THE AIR BALANCE CONTRACTOR SHALL BEAR ALL COSTS INCURRED FOR WORK THAT MUST BE RE-BALANCED DUE TO CONFLICTS ON CONTRACT DOCUMENTS. CONTRACTOR SHALL PROVIDE THREE COPIES OF THE AIR BALANCE REPORT TO THE ENGINEER FOR APPROVAL.
10. FOR INACCESSIBLE AREAS THE CONTRACTOR SHALL PROVIDE ACCESS PANELS FOR ALL DAMPERS, EQUIPMENT, SMOKE DETECTORS, AND CONTROL DEVICES. THESE PANELS SHALL MATCH THE RATING OF THE WALL AND/OR CEILING THAT THEY ARE LOCATED IN. MINIMUM ACCESS PANEL SIZES SHALL BE AS FOLLOWS:

    1) HAND ACCESS: 12"x12"

    2) BODY ACCESS: 30"x30" MIN. WHERE A LARGER ACCESS SIZE IS REQUIRED DUE TO INSTALLATION CONSTRAINTS, THE CONTRACTOR SHALL DO SO AT NO ADDITIONAL COST AND SHALL NOTIFY THE ARCHITECT AND ENGINEER OF DEVIATIONS PRIOR TO INSTALLATION.
11. COORDINATE THE LOCATION OF ALL ROOF OPENINGS AND THE LOCATION OF ALL ROOF MOUNTED EQUIPMENT WITH THE STRUCTURAL AND ARCHITECTURAL PLANS PRIOR TO ANY INSTALLATION.
12. PLATFORMS, CURBS, AND FLASHINGS FOR MECHANICAL EQUIPMENT SHALL BE AS INDICATED ON THE STRUCTURAL AND ARCHITECTURAL PLANS, UNLESS NOTED OTHERWISE. WHERE THERE IS A CONFLICT WITH THE MECHANICAL PLANS, THE CONTRACTOR SHALL NOTIFY THE ARCHITECT AND ENGINEER PRIOR TO FABRICATION AND INSTALLATION.
13. ALL EQUIPMENT, ACCESSORIES, AND RELATED PIPING SHALL BE INSTALLED IN STRICT ACCORDANCE WITH THE EQUIPMENT MANUFACTURER'S RECOMMENDATIONS. PROVIDE ALL FITTINGS, TRANSITIONS, DAMPERS, VALVES, AND OTHER DEVICES REQUIRED FOR A COMPLETE WORKABLE INSTALLATION.
14. MAINTENANCE LABEL SHALL BE AFFIXED TO ALL MECHANICAL EQUIPMENT AND A MAINTENANCE MANUAL SHALL BE PROVIDED FOR THE OWNER'S USE.
15. PROVIDE MERV 13 EFFICIENCY THROWAWAY FILTERS FOR ALL AIR CONDITIONING UNITS. SEE EQUIPMENT SCHEDULE AND SPECIFICATIONS FOR TYPE. SIZES SHALL BE AS RECOMMENDED BY THE MANUFACTURER, UNLESS OTHERWISE SPECIFIED.
16. AIR FILTERS SHALL BE STATE FIRE MARSHALL APPROVED AND LISTED. PREFORMED FILTERS HAVING COMBUSTIBLE FRAMING SHALL BE TESTED AS A COMPLETE ASSEMBLY. AIR FILTERS SHALL BE ACCESSIBLE FOR CLEANING OR REPLACEMENT.
17. ALL EQUIPMENT WITH MOVING PARTS SHALL BE PROVIDED WITH FLEXIBLE DUCT AND PIPE CONNECTIONS.
18. ALL EQUIPMENT SHALL BE LABELED AS TO THE SPACE IT SERVES.
19. ALL HVAC EQUIPMENT SHALL BE CERTIFIED BY THE CALIFORNIA ENERGY COMMISSION TO COMPLY WITH LATEST EFFICIENCY STANDARDS.
20. PROVIDE MANUAL VOLUME DAMPERS AND BACKDRAFT DAMPERS FOR FRESH AIR INTAKES ON ALL AIR HANDLING EQUIPMENT AND EXHAUST FANS SERVING CONDITIONED SPACES. EXCEPTION: EQUIPMENT WITH FACTORY ECONOMIZERS. DAMPERS SITUATED ON THE ROOF SHALL BE SECURED AFTER BALANCING, TO AVOID THE POSSIBILITY OF ADJUSTMENT.
21. ALL AIR HANDLING EQUIPMENT SERVING CONDITIONED SPACES SHALL PROVIDE CONTINUOUS FRESH AIR TO SPACES IN OCCUPIED MODE.
22. CONTRACTOR SHALL VERIFY ALL CLEARANCES AND AVAILABLE SPACE FOR DUCTWORK PRIOR TO ORDERING AND/OR FABRICATING MATERIAL.
23. CONTRACTOR TO SUBMIT ALL EQUIPMENT, DUCTWORK, AIR DISTRIBUTION DEVICES, AND OTHER ACCESSORIES TO THE ENGINEER FOR APPROVAL PRIOR TO ANY ORDERING OF SUCH ITEMS.
24. CONTRACTOR SHALL BE RESPONSIBLE FOR COMMISSIONING OF EQUIPMENT.
25. PAINT EXPOSED SURFACES, WHETHER OR NOT COLORS ARE DESIGNATED IN SCHEDULES, EXCEPT WHERE A SURFACE OR MATERIAL IS SPECIFICALLY INDICATED NOT TO BE PAINTED OR IS TO REMAIN NATURAL. WHERE AN ITEM OR SURFACE IS NOT SPECIFICALLY MENTIONED, PAINT THE SAME AS SIMILAR ADJACENT MATERIALS OR SURFACES. IF COLOR OR FINISH IS NOT DESIGNATED, THE OWNER'S REPRESENTATIVE WILL SELECT FROM STANDARD COLORS OR FINISHES AVAILABLE.

    1) PAINTING INCLUDES FIELD PAINTING EXPOSED BARE AND COVERED PIPES AND DUCTS (INCLUDING COLOR CODING), HANGERS, EXPOSED STEEL AND IRON WORK, AND PRIMED METAL SURFACES OF MECHANICAL AND ELECTRICAL EQUIPMENT.
26. ALL MECHANICAL PIPING SYSTEMS, DUCTS, CONTROLS, VALVES, APPARATUS, ETC., EXCEPT THOSE THAT ARE INSTALLED IN INACCESSIBLE LOCATIONS IN PARTITIONS, WALLS, AND FLOORS, AND THOSE BURIED UNDERGROUND, SHALL BE PERMANENTLY MARKED AND IDENTIFIED AS INDICATED IN THE RELATED SPECIFICATIONS.
27. UNLESS SPECIFICALLY SHOWN ON THESE PLANS NO STRUCTURAL MEMBER SHALL BE CUT, DRILLED NOR NOTCHED WITHOUT PRIOR WRITTEN AUTHORIZATION FROM THE STRUCTURAL ENGINEER AND THE DISTRICT STRUCTURAL ENGINEER FROM THE DIVISION OF THE STATE ARCHITECT.
28. CONTRACTOR TO BALANCE THE AIRFLOW FOR THE HVAC UNITS AND ALSO CHECK PROPER OPERATION OF THE ECONOMIZER/ POWER EXHAUST TO MAINTAIN 0.02 INCHES MAXIMUM DIFFERENTIAL PRESSURE AT EACH DOOR TO MEET THE ADA REQUIREMENTS FOR DOOR OPENING/CLOSURE OF NO MORE THAN 5 POUNDS. CONTRACTOR TO MAKE NECESSARY ADJUSTMENTS TO MEET THESE REQUIREMENTS

----- CONTROLS -----

1. CONTROL SCHEMATICS ARE FOR SEQUENCE ONLY. REFER TO ELECTRICAL DRAWINGS AND SPECIFICATIONS FOR ALL ELECTRICAL DEVICES REQUIRED.
2. ALL LINE VOLTAGE WIRING SHALL BE INSTALLED IN CONDUIT. ALL LINE VOLTAGE CONDUIT AND WIRING, INCLUDING FINAL CONNECTIONS, SHALL BE FURNISHED AND INSTALLED BY THE ELECTRICAL CONTRACTOR AS INDICATED ON THE ELECTRICAL DRAWINGS OR SPECIFIED IN THE ELECTRICAL SECTION OF THE SPECIFICATIONS. ALL ELECTRICAL WORK SHALL BE INSTALLED IN ACCORDANCE WITH ALL APPLICABLE CODES AND REGULATIONS OF ALL GOVERNING BODIES HAVING JURISDICTION THEREOF.
3. ALL LOW VOLTAGE CONDUIT AND WIRING AS APPLICABLE, INCLUDING FINAL CONNECTIONS, SHALL BE FURNISHED AND INSTALLED BY THE MECHANICAL CONTRACTOR AS INDICATED ON THE MECHANICAL DRAWINGS.

    A1) ALL LOW VOLTAGE WIRING SHALL BE INSTALLED IN CONDUIT.

    A2) ALL LOW VOLTAGE WIRING SHALL BE PLENUM – RATED.

    B) WHERE THE CONTROLS CONTRACTOR IS RETAINED BY THE OWNER, THEY SHALL BE RESPONSIBLE FOR THE FOLLOWING:

    1) FURNISH AND INSTALL ALL DEVICES, WIRING, AND TERMINATIONS REQUIRED FOR A COMPLETE AND FUNCTIONAL INSTALLATION.

    2) COORDINATE ALL WORK AND REQUIREMENTS WITH OTHER TRADES INCLUDING GENERAL, MECHANICAL, AND ELECTRICAL CONTRACTORS PRIOR TO BID.

    3) CONTRACTOR SHALL FOLLOW ALL SUBMITTAL REQUIREMENTS PER DRAWINGS.
4. CONTRACTOR SHALL BE RESPONSIBLE FOR ORDERING AIR CONDITIONING EQUIPMENT WITH THRU-THE-BASE POWER, CONTROL, AND GAS CONNECTIONS. VERIFY ALL CONNECTION LOCATIONS WITH UNIT MANUFACTURER AND COORDINATE WITH OTHER TRADES AS NECESSARY.
5. ELECTRICAL CONTRACTOR SHALL PROVIDE REQUIRED RELAY ACCESSORIES FOR CONNECTION OF 120 VOLT 1 PHASE VENTILATION EQUIPMENT TO 277 VOLT 1 PHASE LIGHTING AS APPLICABLE.
6. ALL THERMOSTATS SHALL HAVE LOCKABLE COVERS (WHERE INDICATED ON PLANS) AND SHALL BE OF THE ELECTRONIC, PROGRAMMABLE, AUTOMATIC CHANGEOVER TYPE TO SEQUENCE HEATING OR COOLING. SET POINT RANGE SHALL BE 10 DEGREES F. BETWEEN FULL HEATING AND COOLING. THEY SHALL HAVE CAPABILITY OF TERMINATING ALL HEATING AT A TEMPERATURE NO MORE THAN 70 DEGREES F., AND COOLING AT A TEMPERATURE NOT LESS THAN 78 DEGREES F. ADJUSTABLE TEMPERATURE DIFFERENTIAL SHALL BE 1– 1/2 DEGREES F. CONTROL LIMITS SHALL BE FROM 55 DEGREES F. TO 85 DEGREES F. MOUNT AT 48 INCHES ABOVE FLOOR OR AS REQUIRED BY LOCAL AUTHORITIES OR HANDICAP CODES.

    NOTES: 1) THERMOSTATS THAT ARE PART OF AN ENERGY MANAGEMENT SYSTEM SHALL FOLLOW CONTROL SPECIFICATIONS AND DRAWING REQUIREMENTS.

    2) SHOULD THE LOCATION OF THE THERMOSTAT NOT MEET THE ADA HEIGHT REQUIREMENTS DUE TO OBSTRUCTIONS, THEN AN ALTERNATE LOCATION SHALL BE PROPOSED OR REQUESTED BY THE CONTRACTOR THAT SHALL BE APPROVED BY THE ENGINEER AND ARCHITECT.
7. LINE VOLTAGE THERMOSTATS SHALL BE FURNISHED BY THE MECHANICAL CONTRACTOR AND INSTALLED BY THE ELECTRICAL CONTRACTOR.
8. CONTROLS CONTRACTOR AND AIR BALANCE CONTRACTOR SHALL COORDINATE WORK AND PERFORM NECESSARY TASKS AS REQUIRED TO OBTAIN AIR AND WATER FLOW QUANTITIES FOR SYSTEMS SHOWN HEREIN.

    CONTROLS SHALL BE PROVIDED TO PROVIDE THE MINIMUM RATE OF OUTDOOR AIR REQUIRED BY THE STATE ENERGY REGULATIONS.
9. ----- AIR DISTRIBUTION -----
1. ALL DUCTWORK SHALL BE SHEET METAL CONSTRUCTED OR SPIRAL ERECTED, AND TESTED IN ACCORDANCE WITH THE MOST RESTRICTIVE OF LOCAL REGULATIONS, PROCEDURES DETAILED IN THE ASHRAE HANDBOOK OF FUNDAMENTALS, CHAPTER 6 OF THE MECHANICAL CODE, OR THE APPLICABLE STANDARDS ADOPTED BY THE SHEET METAL AND AIR CONDITIONING CONTRACTORS NATIONAL ASSOCIATION.
2. CONTRACTOR SHALL PROVIDE EXTERIOR MANUAL VOLUME DAMPER HANDLES W/ LOCK-DOWN AFTER COMPLETING AIR BALANCE & OBTAIN FINAL APPROVAL FROM ENGINEER.
3. ALL FLEXIBLE DUCTWORK SHALL NOT EXCEED SEVEN FEET IN LENGTH TO RESPECTIVE DIFFUSERS, GRILLES, AND REGISTERS, OR OTHER AIR DEVICES.
4. PROVIDE SEISMIC RESTRAINTS TO ALL DUCTWORK, PIPE, AND EQUIPMENT SUPPORTS IN ACCORDANCE WITH THE LATEST SMACNA GUIDELINES FOR SEISMIC RESTRAINT OF MECHANICAL SYSTEMS. SUSPENDED EQUIPMENT SHALL BE PROVIDED WITH SEISMIC ANCHORAGE AND ISOLATION SUPPORTS.
5. ALL DUCT TURNS IN SUPPLY, RETURN, AND EXHAUST DUCTS SHALL HAVE SINGLE WALL TURNING VANES WITH TRAILING EDGE, UNLESS OTHERWISE NOTED.
6. DUCTWORK HANDLING CONDITIONED AIR SHALL BE INSULATED OR LINED AS INDICATED ON DRAWINGS. SUPPLY AND RETURN DUCT INSULATION SHALL BE MIN. 2" THICK, 1.5 LB./CUBIC FT. DENSITY AND HAVE A MIN. VALUE OF R-8 WHERE LOCATED IN ONE OR MORE OF THE FOLLOWING SPACES:

    A) OUTDOORS, OR

    B) IN A SPACE BETWEEN THE ROOF AND AN INSULATED CEILING, OR

    C) IN A SPACE DIRECTLY UNDER A ROOF WITH FIXED VENTS OR OPENINGS TO THE OUTSIDE OR UNCONDITIONED SPACES, OR

    D) IN AN UNCONDITIONED CRAWLSPACE; OR

    E) IN OTHER UNCONDITIONED SPACES

    PER 2016 CEC, OTHERWISE PROVIDE R-6.2 WHEN LOCATED IN CONDITIONED ATTIC SPACES ABOVE CEILINGS . ALL DUCTWORK EXPOSED ON ROOF SHALL BE INTERNALLY LINED WITH 2" THICK, 1.5LB./CUBIC FT. DENSITY DUCT LINER UNLESS OTHERWISE INDICATED OR SPECIFIED. ALL DUCT SIZES ARE NET CLEAR INSIDE DIMENSIONS. ALL DUCT JOINTS SHALL BE SEALED PER CHAPTER 6 MECHANICAL CODE REQUIREMENTS. PROVIDE PIPING AND DUCT INSULATION IN ACCORDANCE WITH THE LATEST STANDARDS OF THE CALIFORNIA ENERGY COMMISSION.
7. ALL INSULATION SHALL HAVE A FLAME SPREAD OF NOT MORE THAN 25 AND A SMOKE DENSITY NOT EXCEEDING 50.
8. MANUAL VOLUME DAMPERS SHALL BE PROVIDED IN ALL DUCT BRANCHES TO INDIVIDUAL DIFFUSERS, GRILLES, AND REGISTERS, AS WELL AS FRESH AIR INTAKE DUCTS. DAMPERS SHALL BE LOCATED AT THE BRANCH DUCT LOCATIONS. THE MECHANICAL CONTRACTOR SHALL COORDINATE LOCATIONS OF DAMPERS WITH THE AIR BALANCE CONTRACTOR PRIOR TO BID, SO THEY ARE ACCESSIBLE PRIOR TO INSTALLATION. IN LOCATIONS WHERE THESE DAMPERS ARE INACCESSIBLE, CABLE OPERATED ADJUSTMENT CONTROLS SHALL BE PROVIDED AT NO ADDITIONAL COST. OPPOSED BLADE DAMPERS SHALL NOT BE PERMITTED UNLESS NOTED OTHERWISE.
9. AUTOMATIC SMOKE FIRE DAMPER REQUIREMENTS ARE AS FOLLOWS:

    A) PROVIDE AUTOMATIC SMOKE FIRE DAMPERS AT ALL PENETRATIONS OF FIRE-RATED CEILINGS AND WALLS THROUGHOUT. CONTRACTOR SHALL COORDINATE FIRE-RATED AREAS WITH THE MECHANICAL DRAWINGS AND OTHER TRADES PRIOR TO INSTALL AND SHALL NOTIFY PERTINENT PARTIES PRIOR TO ANY WORK PERFORMED IN THESE AREAS. IN ADDITION, CONTRACTOR SHALL BE RESPONSIBLE TO PROVIDE PROPER ACCESS FOR DAMPERS INSTALLED. THE DAMPER FIRE RATING SHALL BE COMPATIBLE WITH THE CEILING/WALL RATING.

    B) LOCATION OF FIRE-RATED CEILINGS AND WALLS ARE AS INDICATED ON THE MECHANICAL DRAWINGS.

    C) FIRE AND/OR SMOKE DAMPER(S) SHALL BE PROVIDED AS REQUIRED BY THE LATEST CALIFORNIA BUILDING CODE.

    D) CONTRACTOR SHALL FURNISH FLUSH MOUNTED FIRE AND/OR SMOKE DAMPERS, SO THAT DAMPER DO NOT EXTEND PASS WALLS, FOR AREAS WITHOUT CEILINGS FOR QUALITY WORKMANSHIP.
10. CONTRACTOR SHALL PERFORM MAINTENANCE ON ALL EXISTING FIRE AND SMOKE/FIRE DAMPERS PER MANUFACTURER'S PROVISIONS. ANY FAILURES OR NON-OPERATING DAMPERS SHALL BE REPLACED AND SHALL CONFORM TO CURRENT CODE REGULATIONS.
11. ALL DUCTWORK PASSING THROUGH FIRE RATED CORRIDORS AND LOBBIES SHALL BE MIN. 26 GAGE SHEET METAL CONSTRUCTION.
12. ALL DUCTWORK, PIPING, CONDUIT, & ETC. PENETRATING FIRE RATED CONSTRUCTION SHALL HAVE APPROVED FIRE STOPPING.
13. UNLESS OTHERWISE NOTED THE CONTRACTOR SHALL BE RESPONSIBLE FOR FURNISHING AND INSTALLING EXTERIOR LOUVERS CALLED OUT HEREIN. COORDINATE SIZE(S) AND LOCATION(S) WITH OTHER TRADES AS NECESSARY PRIOR TO BID.

----- ROOFING -----

1. CONTRACTOR TO REMOVE (E) ROOFING AS REQUIRED AND RE-ROOF OVER NEW EQUIPMENT PAD WITH MEMBRANE TO MATCH (E). NEW ROOF MEMBRANE TO TIE INTO (E) MEMBRANE PER MEMBRANE MANUFACTURER'S REQUIREMENTS.

LEGEND

SYMBOL	ABBR.	DESCRIPTION
	–	SUPPLY AIR RISER
	–	RETURN AIR RISER
	–	EXHAUST AIR RISER
	SAG	SUPPLY AIR GRILLE
	RAG	RETURN AIR GRILLE
	EAG	EXHAUST AIR GRILLE
	SWR	SIDEWALL REGISTER
	(L)	LINED DUCTWORK
	–	FLEXIBLE CONNECTION
	FC	FLEXIBLE CONNECTION
	–	NEW DUCT (SEE PLAN)
	–	EXISTING DUCT (SEE PLAN)
	–	DEMO DUCT (SEE PLAN)
	MVD	MANUAL VOLUME DAMPER
	BDD	BACKDRAFT DAMPER
S/F	SFD	SMOKE / FIRE DAMPER
F	FD	FIRE DAMPER
	DL	DOOR LOUVER
U.C.	UC	UNDERCUT DOOR 3/4"
RS	RS	REFRIGERANT SUCTION LINE
RL	RL	REFRIGERANT LIQUID LINE
CD	CD	CONDENSATE DRAIN
	S.D.	SMOKE DETECTOR
	P.O.C.	POINT OF CONNECTION
	T-STAT	THERMOSTAT
H	H	HUMIDISTAT
TS	TS	TEMPERATURE SENSOR
OS	OS	OVERRIDE SWITCH
PD	PD	PRESSURE DIFFERENTIAL SWITCH
S	S	SWITCH
	O.C.	ON CENTER
	HWR	HOT-WATER RETURN
	HWS	HOT-WATER SUPPLY
	I.D.	INSIDE DIAMETER
	O.D.	OUTSIDE DIAMETER
	W/	WITH
	S/M	SHEET METAL
	S/S	STAINLESS STEEL
	G.C.	GENERAL CONTRACTOR
	VTR	VENT THRU ROOF
	EMS	ENERGY MANAGEMENT SYSTEM
	OBD	OPPOSED BLADE DAMPER
	FSC	FAN SPEED CONTROL
E	E	ITEMS FURNISHED AND INSTALLED BY ELECTRICAL CONTRACTOR AS SPECIFIED ON THE ELECTRICAL CONTRACT DOCUMENTS
M	M	ITEMS FURNISHED AND INSTALLED BY MECHANICAL CONTRACTOR AS SPECIFIED ON THE MECHANICAL CONTRACT DOCUMENTS
EM	EM	ITEMS FURNISHED BY ELECTRICAL CONTRACTOR AND INSTALLED BY MECHANICAL CONTRACTOR.
ME	ME	ITEMS FURNISHED BY MECHANICAL CONTRACTOR AND INSTALLED BY ELECTRICAL CONTRACTOR.
	C.C.	CONTROLS CONTRACTOR
	CBD	COUNTER-BALANCE DAMPER
DS	D.S.	DOOR SWITCH

SHEET INDEX

S.NO.	SHEET No.	SHEET TITLE
1	M-01	MECHANICAL GENERAL NOTE AND LEGEND
2	M-02	MECHANICAL SCHEDULES
3	M-2.0	MECHANICAL BUILDING A DEMOLITION AND REMODEL PLANS
4	M-2.1	MECHANICAL BUILDING C DEMOLITION AND REMODEL PLANS
5	M-2.2	MECHANICAL BUILDING D DEMOLITION AND REMODEL PLANS
6	M-2.3	MECHANICAL BUILDING E DEMOLITION AND REMODEL PLANS
7	M-2.4	MECHANICAL BUILDING F DEMOLITION AND REMODEL PLANS
8	M-2.5	MECHANICAL BUILDING G DEMOLITION AND REMODEL PLANS
9	M-2.6	MECHANICAL BUILDING K DEMOLITION AND REMODEL PLANS
10	M-3.1	MECHANICAL SECTIONS
11	M-4.1	MECHANICAL DETAILS
12	M-4.3	MECHANICAL DETAILS
13	M-4.4	MECHANICAL DETAILS
14	M-5.1	MECHANICAL CONTROLS
15	M-5.2	MECHANICAL CONTROLS
16	M-5.3	MECHANICAL CONTROLS
17	M-5.4	MECHANICAL CONTROLS
18	M-5.5	MECHANICAL CONTROLS
19	M-6.0	TITLE 24 BUILDING A
20	M-6.1	TITLE 24 BUILDING C
21	M-6.2	TITLE 24 BUILDING D
22	M-6.3	TITLE 24 BUILDING E
23	M-6.4	TITLE 24 BUILDING F
24	M-6.5	TITLE 24 BUILDING G
25	M-6.6	TITLE 24 BUILDING K

PIPING, DUCTWORK, AND ELECTRICAL DISTRIBUTION SYSTEM BRACING NOTE

PIPING, DUCTWORK AND ELECTRICAL DISTRIBUTION SYSTEMS SHALL BE BRACED TO COMPLY WITH THE FORCES AND DISPLACEMENTS PRESCRIBED IN ASCE 7-10 SECTION 13.3.3 AS DEFINED IN ASCE 7-10 SECTION 13.6.5.6, 13.6.7. 13.6.8 AND 2016 CBC, SECTIONS 1616A.1.24, 1616A.1.25, AND 1616A.1.26.

THE METHOD OF SHOWING BRACING AND ATTACHMENTS TO THE STRUCTURE FOR THE IDENTIFIED DISTRIBUTION SYSTEM ARE AS NOTED BELOW. WHEN BRACING AND ATTACHMENTS ARE BASED ON A PREAPPROVED INSTALLATION GUIDE (E.G. SMACNA OR OSHPD OPM), COPIES OF THE BRACING SYSTEM INSTALLATION GUIDE OR MANUAL SHALL BE AVAILABLE ON THE JOBSITE PRIOR TO THE START OF AND DURING THE HANGING AND BRACING OF THE DISTRIBUTION SYSTEMS. THE STRUCTURAL ENGINEER OF RECORD SHALL VERIFY THE ADEQUACY OF THE STRUCTURE TO SUPPORT THE HANGER AND BRACE LOADS.

MECHANICAL PIPING (MP), MECHANICAL DUCTS (MD), PLUMBING PIPING (PP), ELECTRICAL DISTRIBUTION SYSTEMS (E):

MPX MD_ PP_ E_ – OPTION 1: DETAILED ON THE APPROVED DRAWINGS WITH PROJECT SPECIFIC NOTES AND DETAILS.

MP_ MD_ PP_ E_ – OPTION 2: SHALL COMPLY WITH THE APPLICABLE DRAWINGS WITH PROJECT SPECIFIC NOTES AND DETAILS.

MP_ MD_ PP_ E_ – OPTION 3: SHALL COMPLY WITH THE SMACNA SEISMIC RESTRAINT MANUAL, OSHPD EDITION (2009), INCLUDING ANY ADDENDA. FASTENERS AND OTHER ATTACHMENTS NOT SPECIFICALLY IDENTIFIED IN THE SMACNA SEISMIC RESTRAINT MANUAL, OSHPD EDITION, ARE DETAILED ON THE APPROVED DRAWINGS WITH PROJECT SPECIFIC NOTES AND DETAILS. THE DETAILS SHALL ACCOUNT FOR THE APPLICABLE SEISMIC HAZARD LEVEL_____ AND THE CONNECTION LEVEL_____ FOR THE PROJECT AND CONDITIONS. .

MEP COMPONENT ANCHORAGE NOTE

ALL MECHANICAL, PLUMBING AND ELECTRICAL COMPONENTS SHALL BE ANCHORED AND INSTALLED PER THE DETAILS ON THE DSA APPROVED CONSTRUCTION DOCUMENTS. WHERE NO DETAIL IS INDICATED, THE FOLLOWING COMPONENTS SHALL BE ANCHORED OR BRACED TO MEET THE FORCE AND DISPLACEMENT REQUIREMENTS PRESCRIBED IN THE 2016 CBC, SECTION 1616A.1.18 THROUGH 1616A.1.26 AND ASCE 7-10 CHAPTER 13, 26 AND 30.

1. ALL PERMANENT EQUIPMENT AND COMPONENTS.
2. TEMPORARY OR MOVABLE EQUIPMENT THAT IS PERMANENTLY ATTACHED (e.g. HARD WIRE) TO THE BUILDING UTILITY SERVICES SUCH AS ELECTRICITY, GAS OR WATER.
3. MOVABLE EQUIPMENT WHICH IS STATIONED IN ONE PLACE FOR MORE THAN 8 HOURS AND HEAVIER THAN 400 POUNDS ARE REQUIRED TO BE ANCHORED WITH TEMPORARY ATTACHMENTS.

THE ATTACHMENT OF THE FOLLOWING MECHANICAL AND ELECTRICAL COMPONENTS SHALL BE POSITIVELY ATTACHED TO THE STRUCTURE, BUT NEED NOT BE DETAILED ON THE PLANS. THE PROJECT INSPECTOR WILL VERIFY THAT THESE ITEMS HAVE BEEN POSITIVELY ATTACHED. THESE COMPONENTS SHALL HAVE FLEXIBLE CONNECTIONS PROVIDED BETWEEN THE COMPONENT AND ASSOCIATED DUCTWORK, PIPING AND CONDUIT.

A. COMPONENTS WEIGHING LESS THAN 400 POUNDS AND HAVE A CENTER OF MASS LOCATED 4 FEET OR LESS ABOVE THE ADJACENT FLOOR OR ROOF LEVEL THAT DIRECTLY SUPPORT THE COMPONENT.
B. COMPONENTS WEIGHING LESS THAN 20 POUNDS, OR IN THE CASE OF DISTRIBUTED SYSTEMS, LESS THAN 5 POUNDS PER FOOT, WHICH ARE SUSPENDED FROM A ROOF OR FLOOR OR HUNG FROM A WALL.

FOR THOSE ELEMENTS THAT DO NOT REQUIRE DETAILS ON THE APPROVED DRAW

VARIABLE AIR VOLUME BOX SCHEDULE

TAG	MFR. & MODEL #	AC UNIT	ROOM	SIZE, IN.		CFM		WEIGHT (LB)	ANCHORAGE DETAIL	REMARKS
				INLET	OUTLET	MAX	MIN			
VAV1 C	CARRIER 35E12	AC1 C	CLASSROOM 103C	12	16"X14"	1,400	350	35	3 S1.0 / 11 M-4.7	1
VAV2 C	CARRIER 35E12	AC1 C	CLASSROOM 104C	12	16"X14"	1,400	350	35	3 S1.0 / 11 M-4.7	1
VAV3 C	CARRIER 35E12	AC1 C	CLASSROOM 105C	12	16"X14"	1,400	350	35	3 S1.0 / 11 M-4.7	1
VAV4 C	CARRIER 35E12	AC1 C	CLASSROOM 112C	12	16"X14"	1,400	350	35	3 S1.0 / 11 M-4.7	1
VAV5 C	CARRIER 35E	AC1 C	CLASSROOM 113C	12	16"X14"	1,400	350	35	3 S1.0 / 11 M-4.7	1
VAV6 C	CARRIER 35E	AC1 C	CLASSROOM 114C	12	16"X14"	1,400	350	35	3 S1.0 / 11 M-4.7	1
VAV1 D	CARRIER 35E	AC1 D	CLASSROOM 103D	12	16"X14"	1,400	350	35	3 S1.0 / 11 M-4.7	1
VAV2 D	CARRIER 35E	AC1 D	CLASSROOM 104D	12	16"X14"	1,400	350	35	3 S1.0 / 11 M-4.7	1
VAV3 D	CARRIER 35E	AC1 D	CLASSROOM 105D	12	16"X14"	1,400	350	35	3 S1.0 / 11 M-4.7	1
VAV4 D	CARRIER 35E	AC1 D	CLASSROOM 112D	12	16"X14"	1,400	350	35	3 S1.0 / 11 M-4.7	1
VAV5 D	CARRIER 35E	AC1 D	CLASSROOM 113D	12	16"X14"	1,400	350	35	3 S1.0 / 11 M-4.7	1
VAV6 D	CARRIER 35E	AC1 D	CLASSROOM 114D	12	16"X14"	1,400	350	35	3 S1.0 / 11 M-4.7	1
VAV1 F	CARRIER 35E	AC1 F	CLASSROOM 103F	12	16"X14"	1,400	350	35	3 S1.0 / 11 M-4.7	1
VAV2 F	CARRIER 35E	AC1 F	CLASSROOM 104F	12	16"X14"	1,400	350	35	3 S1.0 / 11 M-4.7	1
VAV3 F	CARRIER 35E	AC1 F	CLASSROOM 105F	12	16"X14"	1,400	350	35	3 S1.0 / 11 M-4.7	1
VAV4 F	CARRIER 35E	AC1 F	CLASSROOM 109F	12	16"X14"	1,400	350	35	3 S1.0 / 11 M-4.7	1
VAV5 F	CARRIER 35E	AC1 F	CLASSROOM 110F	12	16"X14"	1,400	350	35	3 S1.0 / 11 M-4.7	1
VAV6 F	CARRIER 35E	AC1 F	CLASSROOM 111F	12	16"X14"	1,400	350	35	3 S1.0 / 11 M-4.7	1
VAV1 G	CARRIER 35E	AC1 G	CLASSROOM 108G	12	16"X14"	1,350	350	35	3 S1.0 / 11 M-4.7	1
VAV2 G	CARRIER 35E	AC1 G	CLASSROOM 107G	12	16"X14"	1,275	350	35	3 S1.0 / 11 M-4.7	1
VAV3 G	CARRIER 35E	AC1 G	CLASSROOM 108G	12	16"X14"	1,275	350	35	3 S1.0 / 11 M-4.7	1
VAV4 G	CARRIER 35E	AC1 G	SPEECHROOM 101G	6	12"X8"	250	50	23	3 S1.0 / 11 M-4.7	1
VAV1 K	CARRIER 35E	AC1 K	CLASSROOM 115K	12	16"X14"	2,000	400	35	3 S1.0 / 11 M-4.7	1
VAV2 K	CARRIER 35E	AC1 K	CLASSROOM 107K	14	16"X14"	2,800	560	43	3 S1.0 / 11 M-4.7	1
VAV3 K	CARRIER 35E	AC1 K	CLASSROOM 101K	12	16"X14"	2,000	400	35	3 S1.0 / 11 M-4.7	1

REMARKS

1. PROVIDE CARRIER ZS PRO SPACE SENSOR.

PACKAGED GAS/ELECTRIC A/C UNIT SCHEDULE

SYMBOL	MAKE	MODEL	TYPE	AC TONNAGE	COOLING CAPACITY		HEAT. INPUT	OSA	EER	SUPPLY FAN			ELECTRICAL				UNIT WT	ANCHORAGE DETAIL	CONTROL DETAIL	REMARKS
					SENSIBLE(MBH)	TOTAL (MBH)	CAP. (MBH)	CFM		ESP	CFM	BHP	VOLTS	PH	MCA	MOCP	(LBS)			
AC1 A	CARRIER	48VLNC60	CV	5T	57.08	42.14	90	400	–	0.6	2,000	0.97	208	1	38.3	60	460	6 M-4.7	1 M-5.7	2, 3, 4, 5
AC1 C	CARRIER	48LCDB24A7A5	VAV	20T	187.84	252.02	176	2,100	10.94	1.25	7,500	9.83	208	3	130.8	150	2650	10 M-4.7	2 M-5.7	1, 2, 4, 5
AC1 D	CARRIER	48LCDB24A6A5	VAV	20T	194.22	254.59	176	2,100	10.94	1.25	7,500	9.83	208	3	130.8	150	2650	9 M-4.7	2 M-5.7	1, 2, 4, 5, 8
AC1 F	CARRIER	48LCDB24A6A5	VAV	20T	194.22	254.59	176	2,100	10.94	1.25	7,500	9.83	208	3	130.8	150	2650	10 M-4.7	2 M-5.7	1, 2, 4, 5
AC1 G	CARRIER	48LCDB12A2A5	VAV	10T	90.52	120.45	144	1,100	13.0	1.25	3,750	2.62	208	3	54	60	2025	13 M-4.7	2 M-5.7	2, 4, 5, 6, 7
AC1 K	CARRIER	48LCDB20A7A5	VAV	17.5T	153.24	203.46	176	1,360	11.2	1.25	6,575	7.94	208	3	104.6	125	2500	10 M-4.7	2 M-5.7	1, 2, 4, 5

REMARKS:

1. FACTORY PROVIDE NON-MODULATING POWER EXHAUST HORIZONTAL APPLICATION MOUNTING RETURN AIR DUCT WITH DRY BULB ECONOMIZER. POWER EXHAUST POWERED FROM UNIT.
2. PROVIDE HORIZONTAL SUPPLY AND RETURN.
3. FRESH AIR HOOD
4. 2" FILTERS (MERV 8)
5. TIME GUARD II CONTROL CIRCUIT
6. CONTRACTOR TO PROVIDE M.W. SAUSSE & CO., INC. 14" HIGH AC CURB AND MANUFACTURER STAMPED STRUCTURAL CALCULATION. (SEE M-4.3).
7. PROVIDE CANFAB MODULATING POWER EXHAUST HORIZONTAL APPLICATION MOUNTING AC UNIT WITH DRY BULB ECONOMIZER. PROVIDE SEPARATE POWER FOR CANFAN MODULATING POWER (MCA- 11.38 / MOCP - 20.48).
8. CONTRACTOR TO PROVIDE M.W. SAUSSE & CO., INC. CUSTOM 30" HIGH AC CURB WITH RETURN DUCT THRU CURB AND MANUFACTURER STAMPED STRUCTURAL CALCULATION. (SEE M-4.4).

NOTES

1. CONTRACTOR TO VERIFY FINAL UNIT LOCATIONS PRIOR TO INSTALLATION.
2. ELECTRICAL SHALL PROVIDE ONE DISCONNECT SWITCH AND SINGLE FEED FOR UNIT AND POWER EXHAUST.
3. POWER EXHAUST FLA AND MCA INCLUDED IN SCHEDULE EXCEPT AC1/G. SEE REMARK 7.

AIR DISTRIBUTION SCHEDULE

SYM.	MFR. & MODEL #	NECK SIZE	CFM RANGE	MAX. NECK VELOCITY	MAX. N.C.	S.P. DROP	TYPE	DAMPER	REMARKS
– SD-1	KRUEGER 1240	8"x8" 10"x10" 12"x12" 14"x14" 16"x16" 18"x18"	0-170 171-270 271-390 391-540 541-700 701-900	400	30	.06	MODULAR	NONE	FRAME 23 FOR T-BAR
– RG-3	KRUEGER EGC5	48"X24"	0-3600	400	30	.03	EGG-CRATE	NONE	–

LEGEND

400 / SD-1 — CFM / AIR DISTRIBUTION DEVICE

SD	SUPPLY DIFFUSER
RG	RETURN GRILLE
TG	TRANSFER GRILLE
EG	EXHAUST GRILLE

ZONE AND BYPASS DAMPER SCHEDULE

SYM	MFR & MODEL #	AC UNIT	AREA SERVICED	CFM		MIN. S.P.	INLET SIZE	WT	REMARKS
				MAX.	MIN.				
ZD 1	CARRIER 35E	ACB 1	RECEPTION/WAITING 101/102	1,400	350	0.05	16"ø	47	1
ZD 2	CARRIER 35E	ACB 1	CONFERENCE 106	1,400	350	0.05	16"ø	47	1
ZD 3	CARRIER 35E	ACB 1	OFFICE 104	1,400	350	0.05	16"ø	47	1
ZD 4	CARRIER 35E	ACB 1	OFFICE 103	1,400	350	0.05	16"ø	47	1
BD 1	CARRIER	ACB 1	SEE PLAN	1,400	350	0.05	16"ø	47	2

1. PROVIDE OPN-VVTZC ZONE DAMPER CONTROLLER
2. PROVIDE CARRIER BYPASS DAMPER CONTROLLER

WLC ARCHITECTS
CLIENT FOCUSED • PASSION DRIVEN
SOUTHERN CALIFORNIA
8163 ROCHESTER AVENUE, SUITE 100
RANCHO CUCAMONGA
CALIFORNIA 91730-0729
TEL: 909-987-0909
www.wlcarchitects.com

LONGFELLOW ELEMENTARY SCHOOL HVAC REPLACEMENT

COMPTON UNIFIED SCHOOL DISTRICT
1101 S DWIGHT AVE.
COMPTON, CA 90220

LICENSED ARCHITECT — MARK GRAHAM C-26046 03-31-19 — STATE OF CALIFORNIA

REGISTERED PROFESSIONAL ENGINEER — RAJEEV BANERJEE No. M29253, Exp. 6/30/19 — MECHANICAL — STATE OF CALIFORNIA

CONSULTANT

IDENTIFICATION STAMP
DIV. OF THE STATE ARCHITECT
OFFICE OF REGULATION SERVICES
APPL 03-118423
AC — FLS — SS — EY
DATE MAR 06 2018
FILE: 19-23

NO	DATE	BY	DESCRIPTION
1			REVISIONS

DRAWN: KC | CHECKED:
DATE: 3/6/2018 | SCALE:
PROJECT NUMBER: 570064

MECHANICAL SCHEDULES

DRAWING NUMBER: M-02

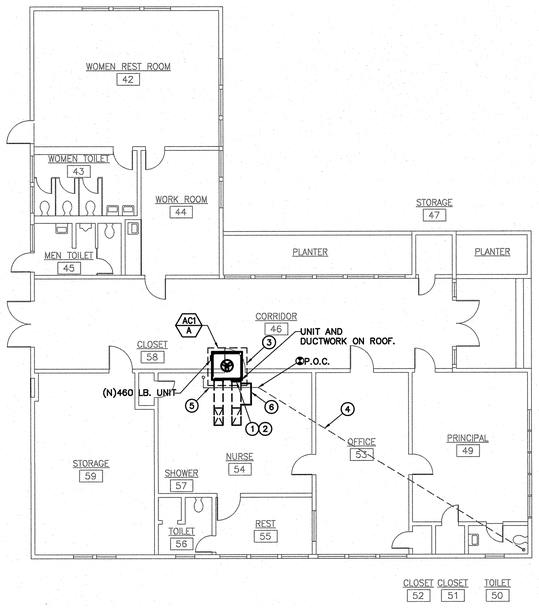

NORTH

BUILDING A - REMODEL FLOOR PLAN | 1/8" = 1'-0" | 1

CONSTRUCTION KEY NOTES:

1. CONTRACTOR TO PROVIDE FLEX. DUCT BETWEEN NEW AC UNIT AND EXISTIGN DUCTWORK. PROVIDE ALL DUCT TRANSITION AS REQUIRED TO CONNECT EXISTING DUCTWORK.
2. CONTRACTOR TO PROVIDE EXTENSION ON GAS PIPING AND CONDENSATE AS REQUIRED AND CONNECT EXISTING GAS AND CONDENSATE DRAIN TO NEW AC UNITS. PROVIDE A NEW VENTED P TRAP IF NECESSARY.
3. EXISTING EQUIPMENT PLATFORM. SEE STRUCTURAL SHEET DETAIL #2/S1.0 AND #6/M-4.1.
4. PARTIAL EXISTING CONDENSATE DRAIN TO REMAIN.
5. NEW CONDENSATE DRAIN.
6. NEW O.S.A. HOOD TO BE PROVIDED.

CONSTRUCTION NOTES:

1. FRESH AIR INTAKE(S) SHALL BE 10'-0"(MIN.) AWAY OR 3'-0" (MIN.) BELOW ANY EXHAUST OUTLET, PLUMBING VENT, OR FLUE.

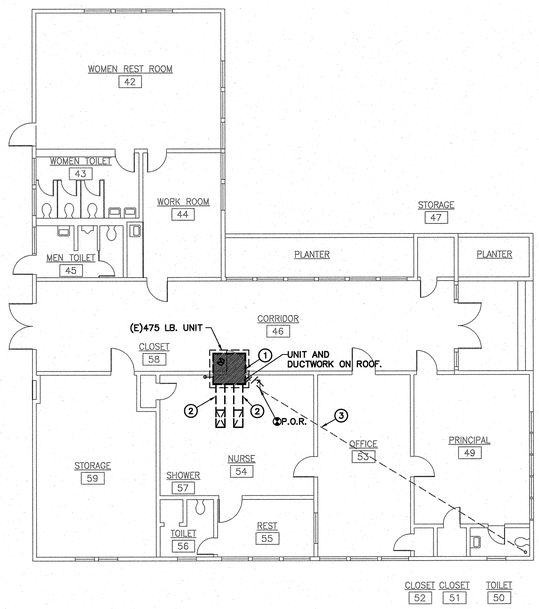

NORTH

BUILDING A - DEMOLITION FLOOR PLAN | 1/8" = 1'-0" | 2

DEMOLITION KEY NOTES:

1. EXISTING AC UNIT AND ALL RELATED ACCESSORIES TO BE REMOVED AND WITH NEW. EXISTING EQUIPMENT FLATFORM TO REMAIN.
2. EXISTING SUPPLY AND RETURN DUCTWORK TO REMAIN.
3. PARTIAL EXISTING CONDENSATE DRAIN TO REMAIN.

DEMOLITION NOTES:

1. OWNER SHALL HAVE FIRST RIGHT OF REFUSAL ON ALL ITEMS TO BE REMOVED. CONTRACTOR SHALL VERIFY ALL SUCH ITEMS WITH OWNER PRIOR TO REMOVAL. ALL ITEMS NOT REFUSED BY OWNER SHALL BE REMOVED INTACT AND FULLY FUNCTIONAL BY CONTRACTOR AND RETURNED TO OWNER. ALL ITEMS REFUSED BY OWNER SHALL BE PROPERLY DISPOSED OF BY CONTRACTOR.
2. PLUMBING CONTRACTOR SHALL DISCONNECT EXISTING GAS AND CONDENSATE DRAIN PIPES FROM MECHANICAL EQUIPMENT TO BE REMOVED AND REPLACED — AS REQUIRED FOR NEW CONNECTION TO NEW AC UNIT.
3. CONTRACTOR SHALL RE-USE EXISTING OPENINGS IN WALLS AND ROOF. COORDINATE WITH OTHER TRADES AS NECESSARY.
4. GENERAL CONTRACTOR SHALL PATCH ALL OPENINGS IN WALLS, ROOF, ETC. THAT WILL NOT BE REUSED FOR FUTURE WORK. COORDINATE AS NECESSARY WITH OTHER TRADES.
5. PRIOR TO ANY WORK BEING DONE CONTRACTOR SHALL MAKE A CAREFUL EVALUATION OF THE EXISTING CONDITIONS AND VERIFY ALL METHODS OF REMOVAL AND INSTALLATION OF MECHANICAL EQUIPMENT.
6. CONTRACTOR SHALL COORDINATE ALL DEMOLITION WORK WITH THE WORK OF ALL OTHER TRADES
7. PATCH ROOF AS NECESSARY. PATCH FLASHINGS AS NECESSARY.

WLC ARCHITECTS
CLIENT FOCUSED • PASSION DRIVEN
SOUTHERN CALIFORNIA
8163 ROCHESTER AVENUE, SUITE 100
RANCHO CUCAMONGA
CALIFORNIA 91730-0729
TEL: 909-987-0909
www.wlcarchitects.com

LONGFELLOW ELEMENTARY SCHOOL HVAC REPLACEMENT

COMPTON UNIFIED SCHOOL DISTRICT
1101 S DWIGHT AVE.
COMPTON, CA 90220

LICENSED ARCHITECT — MARC GRAHAM — C-26046 — 03-31-19 — STATE OF CALIFORNIA
REGISTERED PROFESSIONAL ENGINEER — BRIAN BAKER — No. M29253 — Exp. 6/30/19 — MECHANICAL — STATE OF CALIFORNIA

CONSULTANT

IDENTIFICATION STAMP
DIV. OF THE STATE ARCHITECT
OFFICE OF REGULATION SERVICES
APPL 03-118423
AC — FLS — SS EY
DATE MAR 01 2019
R.E.: 19-23

NO	DATE	BY	DESCRIPTION
1			REVISIONS

DRAWN: KC | CHECKED:
DATE: 3/6/2018 | SCALE:
PROJECT NUMBER: 570064

BUILDING A DEMO AND REMODEL FLOOR PLANS

DRAWING NUMBER: M-2.0

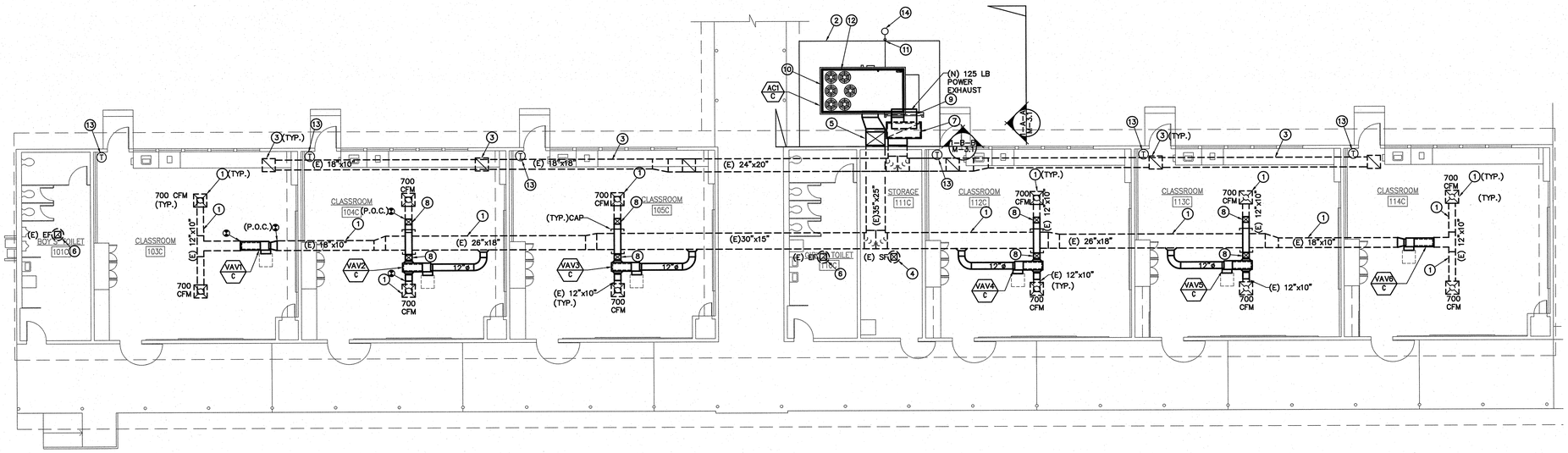

CONSTRUCTION KEY NOTES:

1. EXISTING MAIN SUPPLY DUCTWORK AND SUPPLY AIR DIFFUSERS TO REMAIN. SEE SHEET #2,#3, AND #4/M-4.1 FOR CEILING DIFFUSER AND DUCT SUPPORT DETAIL.
2. NEW FENCE AND CONCRETE PAD.
3. EXISTING MAIN RETURN DUCT AND GRILLES TO REMAIN SEE SHEET #2,#3, AND #4/M-4.1 FOR CEILING DIFFUSER AND DUCT SUPPORT DETAIL.
4. EXISTING SUPPLY FAN AND DUCTWORK TO REMAIN.
5. NEW 35"X25"(L) SUPPLLY AIR DUCT. 40"X28" SHEET METAL SIZES. SEE STRUCTURAL DETAIL SHEET #1/S2.1.
6. EXISTING EXHAUST FAN AND DUCTWORK TO REMAIN.
7. NEW 60"X26"(L) RETURN AIR DUCT. 64"X30" SHEET METAL SIZES. SEE STRUCTURAL DETAIL SHEET #1/S2.1.
8. CONTRACTOR TO OFFSET NEW (W) 12"X10" DUCT ABOVE MAIN SUPPLY DUCT.
9. POWER EXHAUST MOUNTED ON THE NEW RETURN DUCT. SEE STRUCTURAL DETAIL SHEET #1/S2.1.
10. NEW 20 TON AC UNIT WILL BE ON CONCRETE PAD. SEE DETAIL SHEET # 10/M-4.1 FOR PAD.
11. 3/4" CONDENSATE DRAIN TO DRY WELL. PROVIDE NEW VENTED P-TRAP IF NECESSARY.
12. CONTRACTOR TO PROVIDE EXTENSION ON GAS PIPING AS REQUIRED TO RECONNECT EXISTING GAS PIPING TO NEW AC UNIT.
13. ELECTRONIC EMS THERMOSTAT MOUNT AT 48" A.F.F. SEE DETAIL SHEET #7/M-4.1 FOR A/C CONTROL.
14. NEW DRY WELL. SEE DETAIL SHEET #5/M-4.1.

CONSTRUCTION NOTES:

1. CONTRACTOR SHALL COORDINATE WORK WITH OTHER TRADES AS NECESSARY PRIOR TO INSTALLATION.
2. CONTRACTOR SHALL MAINTAIN PROPER CLEARANCES FROM ALL ELECTRICAL EQUIPMENT AND SERVICE CLEARANCES FOR MECHANICAL EQUIPMENT.
4. FRESH AIR INTAKES SHALL BE 10'-0" MIN. AWAY FROM ALL EXHAUST OUTLETS, PLUMBING VENTS, AND FLUES.
5. CONTRACTOR SHALL COORDINATE EXACT EQUIPMENT PAD SIZES AND LOCATIONS WITH OTHER TRADES PRIOR TO INSTALLATION.
6. MAINTAIN MANUFACTURER MIN. CLEARANCES ON ALL AC UNITS.
7. BEFORE BIDDING ON THIS WORK, THE CONTRACTOR SHALL MAKE A CAREFUL EXAMINATION OF THE PREMISES, EXISTING EQUIPMENT AND SERVICES. HE SHALL DEFINITELY DETERMINE IN ADVANCE, THE METHODS OF INSTALLING AND CONNECTING THE NEW EQUIPMENT, DUCTWORK, AND PIPING THE MEANS TO BE PROVIDED FOR GETTING THE EQUIPMENT AND MATERIALS INTO PLACE AND SHALL MAKE HIMSELF THOROUGHLY FAMILIAR WITH ALL OF THE REQUIREMENTS OF THE PROJECT. FAILURE TO VSIT THE SITE WLL IN NO WAY RELIEVE THE SUCCESSFUL CONTRACTOR OF THE NECESSITY OF FURNISHING ANY MATERIAL OR PERFORMING ANY WORK THAT MAY BE REQUIRED TO COMPLETE THE WORK IN ACCORDANCE WITH THE DRAWINGS AND SPECIFICATIONS. THIS ADDITIONAL WORK SHALL BE PERFORMED WITHOUT ADDITIONAL COST TO THE OWNER.
8. BEFORE COMMENCEMENT OF WORK, THE CONTRACTOR SHALL VERIFY THE EXACT LOCATIONS AND DIMENSIONS OF ALL EXISTING EQUIPMENT AND ELECTRICAL SERVICES IN THE AREA OF CONSTRUCTION AND NOTIFY THE ENGINEER OF ANY DISCREPANCIES.

NORTH

BUILDING C - REMODEL FLOOR PLAN | 1/8" = 1'-0" | 1

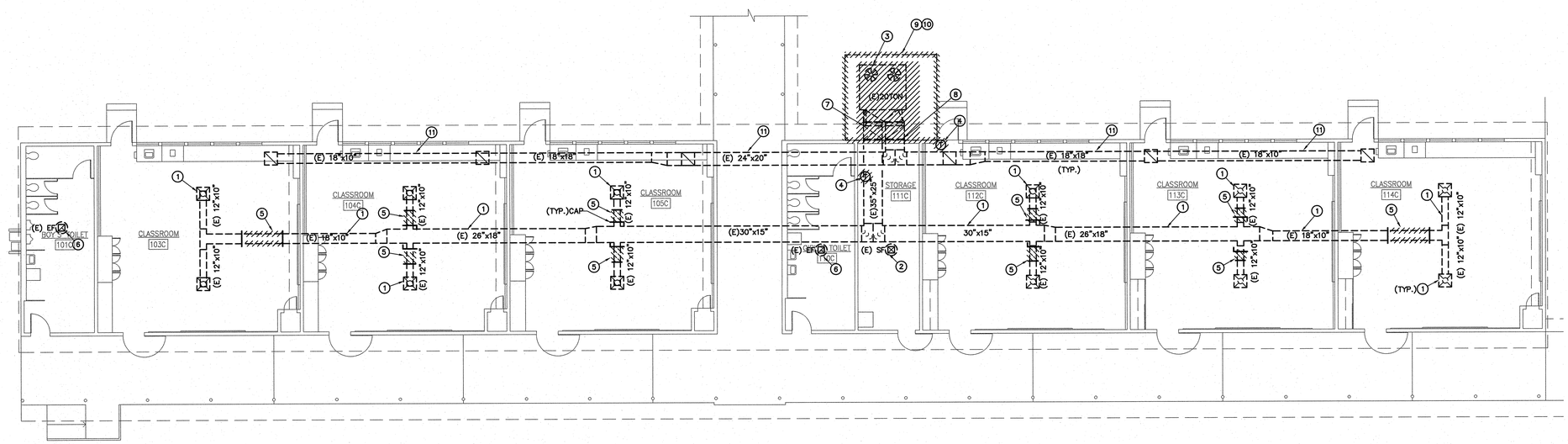

DEMOLITION KEY NOTES:

1. EXISTING MAIN SUPPLY DUCTWORK AND SUPPLY AIR DIFFUSERS TO REMAIN.
2. EXISTING SUPPLY FAN AND DUCTWORK TO REMAIN.
3. EXISTING AC UNIT. AC UNIT CURB AND RELATED ACCESSORIES TO BE REMOVED AND REPLACED WITH NEW AC UNIT.
4. EXISTING T-STAT TO BE REMOVED.
5. PARTIAL EXISTING SUPPLY AIR DUCT AND EXISTING MANUAL VOLUME DAMPER TO BE REMOVED. CAP UNUSED DUCT OPENING.
6. EXISTING EXHAUST FAN AND DUCTWORK TO REMAIN.
7. EXISTING 30"X25" MAIN SUPPLY AIR DUCT TO BE REMOVED AND REPLACED.
8. EXISTING 35"X25" RETURN DUCT TO BE REMOVED AND REPLACED.
9. EXISTING CONCRETE PAD TO BE REMOVED AND REPLACED WITH A NEW PAD.
10. EXISTING FENCE TO BE REMOVED AND REPLACED WITH A NEW FENCE AT A NEW LOCATION.
11. EXISTING MAIN RETURN DUCT AND AIR GRILLES TO REMAIN.

GENERAL DEMOLITION NOTES

1. OWNER SHALL HAVE FIRST RIGHT OF REFUSAL ON ALL ITEMS TO BE REMOVED. CONTRACTOR SHALL VERIFY ALL SUCH ITEMS WITH OWNER PRIOR TO REMOVAL. ALL ITEMS NOT REFUSED BY OWNER SHALL BE REMOVED INTACT AND FULLY FUNCTIONAL BY REFUSED BY OWNER SHALL BE PROPERLY DISPOSED OF BY CONTRACTOR.
2. CONTRACTOR SHALL RE-USE EXISTING OPENINGS IN WALLS AND ROOF WHEREVER POSSIBLE. COORDINATE WITH OTHER TRADES AS NECESSARY. GENERAL CONTRACTOR SHALL MODIFY OPENING AS REQUIRED TO ACCOMODATE NEW MECHANICAL DEVICE.
3. GENERAL CONTRACTOR SHALL PATCH ALL OPENINGS IN WALLS, ROOF, ETC. THAT WILL NOT BE REUSED FOR FUTURE WORK. COORDINATE AS NECESSARY WITH OTHER TRADES.
4. CONTRACTOR SHALL COORDINATE WITH OWNER PRIOR TO ANY WORK BEING DONE STORAGE OF MECHANICAL EQUIPMENT TO BE RE-USED DURING CONSTRUCTION.
5. PRIOR TO ANY WORK BEING DONE CONTRACTOR SHALL MAKE A CAREFUL EVALUATION OF THE EXISTING CONDITIONS AND VERIFY ALL METHODS OF REMOVAL AND INSTALLATION OF MECHANICAL EQUIPMENT.
6. CONTRACTOR SHALL COORDINATE ALL DEMOLITION WORK WITH THE WORK OF ALL OTHER TRADES.
7. CONTRACTOR SHALL CLEAN ALL AIR DEVICES AND DUCTWORK TO REMAIN PER SPECIFICATIONS.
8. CONTRACTOR SHALL CLEAN ALL EXISTING DUCTWORK INCLUDING LINED DUCTWORK TO REMAIN PER SPECIFICATIONS. PRIOR TO BID AND BEFORE COMMENCEMENT OF ANY WORK ALL EXISTING DUCTWORK TO REMAIN SHALL BE CONFIRMED ON SITE.

NORTH

BUILDING C - DEMOLITION FLOOR PLAN | 1/8" = 1'-0" | 2

WLC ARCHITECTS
CLIENT FOCUSED • PASSION DRIVEN

SOUTHERN CALIFORNIA
8163 ROCHESTER AVENUE, SUITE 100
RANCHO CUCAMONGA
CALIFORNIA 91730-0729

TEL: 909-987-0909
www.wlcarchitects.com

LONGFELLOW ELEMENTARY SCHOOL HVAC REPLACEMENT

COMPTON UNIFIED SCHOOL DISTRICT
1101 S DWIGHT AVE.
COMPTON, CA 90220

MARK GRAHAM C-26046 03-31-19 — LICENSED ARCHITECT — STATE OF CALIFORNIA

ABBY BANDERAS No. M29253 Exp. 6/30/19 — REGISTERED PROFESSIONAL ENGINEER — MECHANICAL — STATE OF CALIFORNIA

CONSULTANT

IDENTIFICATION STAMP
DIV. OF THE STATE ARCHITECT
OFFICE OF REGULATION SERVICES
APPL 03-118423
AC — FLS — SS — EY
DATE MAR 0 6 2018
FILE: 19-23

NO	DATE	BY	DESCRIPTION
			REVISIONS

DRAWN: KC	CHECKED:
DATE: 3/6/2018	SCALE:
PROJECT NUMBER: 570064	

BUILDING C DEMO AND REMODEL FLOOR PLANS

DRAWING NUMBER: M-2.1

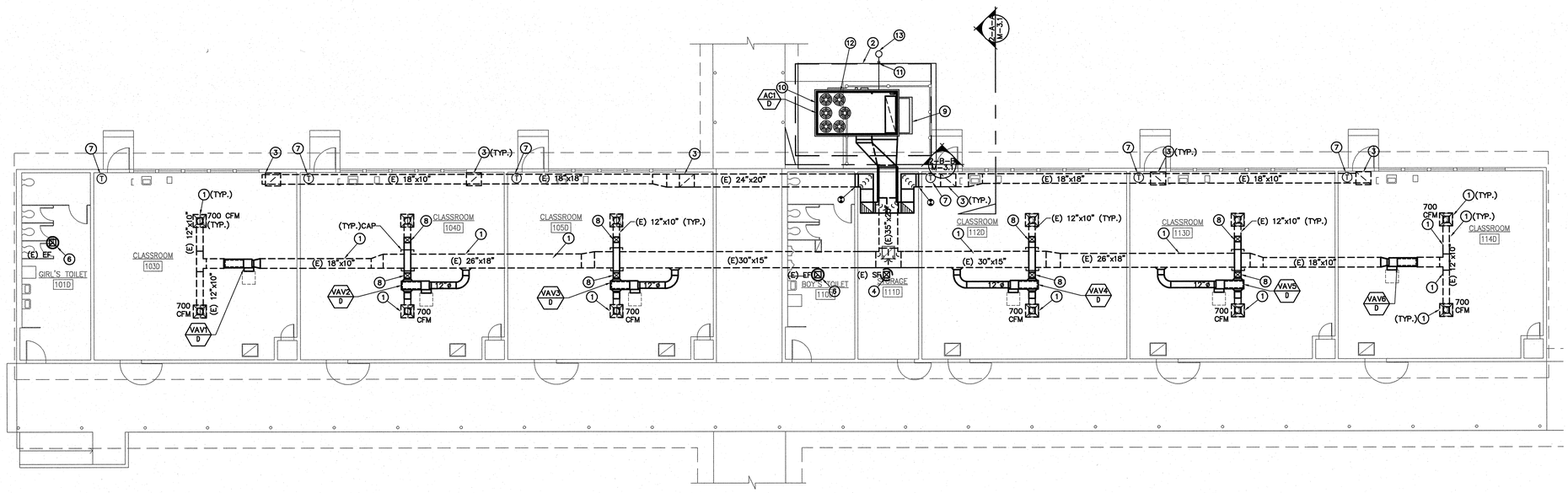

CONSTRUCTION KEY NOTES:

1. EXISTING MAIN SUPPLY DUCTWORK AND SUPPLY AIR DIFFUSERS TO REMAIN.SEE SHEET #2,#3, AND #4/M-4.1 FOR CEILING DIFFUSER AND DUCT SUPPORT DETAIL.
2. NEW FENCE AND CONCRETE PAD.
3. EXISTING MAIN RETURN DUCT AND GRILLES TO REMAIN.SEE SHEET #2,#3, AND #4/M-4.1 FOR CEILING DIFFUSER AND DUCT SUPPORT DETAIL.
4. EXISTING SUPPLY FAN AND DUCTWORK TO REMAIN.
5. CONTRACTOR TO USE M.W. SAUSSE & CO.,INC CURB AND CALCS. SEE SHEET M-4.4.
6. EXISTING EXHAUST FAN AND DUCTWORK TO REMAIN.
7. ELECTRONIC EMS THERMOSTAT MOUNT AT 48" A.F.F. SEE DETAIL SHEET #7/M-4.1 FOR A/C CONTROL.
8. CONTRACTOR TO OFFSET NEW (W) 12"X10" DUCT ABOVE MAIN SUPPLY DUCT.
9. POWER EXHAUST MOUNTED ON THE AC UNIT.
10. NEW AC UNIT AND CURB WILL BE ON CONCRETE PAD. SEE DETAIL SHEET # 9/M-4.1 FOR PAD.
11. ¾" CONDENSATE DRAIN TO DRYWELL. PROVIDE NEW VENTED P-TRAP IF NECESSARY.
12. CONTRACTOR TO PROVIDE EXTENSION ON GAS PIPING AS REQUIRED TO RECONNECT EXISTING GAS PIPING TO NEW AC UNIT.
12. NEW DRY WELL. SEE DETAIL SHEET #5/M-4.1.

CONSTRUCTION NOTES:

1. CONTRACTOR SHALL COORDINATE WORK WITH OTHER TRADES AS NECESSARY PRIOR TO INSTALLATION.
2. CONTRACTOR SHALL MAINTAIN PROPER CLEARANCES FROM ALL ELECTRICAL EQUIPMENT AND SERVICE CLEARANCES FOR MECHANICAL EQUIPMENT.
3. FRESH AIR INTAKES SHALL BE 10'-0" MIN. AWAY FROM ALL EXHAUST OUTLETS, PLUMBING VENTS, AND FLUES.
4. CONTRACTOR SHALL COORDINATE EXACT EQUIPMENT PAD SIZES AND LOCATIONS WITH OTHER TRADES PRIOR TO INSTALLATION.
5. MAINTAIN MANUFACTURER MIN. CLEARANCES ON ALL AC UNITS.
6. BEFORE BIDDING ON THIS WORK, THE CONTRACTOR SHALL MAKE A CAREFUL EXAMINATION OF THE PREMISES, EXISTING EQUIPMENT AND SERVICES. HE SHALL DEFINITELY DETERMINE IN ADVANCE, THE METHODS OF INSTALLING AND CONNECTING THE NEW EQUIPMENT, DUCTWORK, AND PIPING THE MEANS TO BE PROVIDED FOR GETTING THE EQUIPMENT AND MATERIALS INTO PLACE AND SHALL MAKE HIMSELF THOROUGHLY FAMILIAR WITH ALL OF THE REQUIREMENTS OF THE PROJECT. FAILURE TO VISIT THE SITE WILL IN NO WAY RELIEVE THE SUCCESSFUL CONTRACTOR OF THE NECESSITY OF FURNISHING ANY MATERIAL OR PERFORMING ANY WORK THAT MAY BE REQUIRED TO COMPLETE THE WORK IN ACCORDANCE WITH THE DRAWINGS AND SPECIFICATIONS. THIS ADDITIONAL WORK SHALL BE PERFORMED WITHOUT ADDITIONAL COST TO THE OWNER.
7. BEFORE COMMENCEMENT OF WORK, THE CONTRACTOR SHALL VERIFY THE EXACT LOCATIONS AND DIMENSIONS OF ALL EXISTING EQUIPMENT AND ELECTRICAL SERVICES IN THE AREA OF CONSTRUCTION AND NOTIFY THE ENGINEER OF ANY DISCREPANCIES.
8. ALL NEW EXPOSED SHEET METAL DUCTWORK, SHEET METAL CURB / PLATFORM AND DUCT SUPPORT SHALL BE PREPARED AND PAINTED PER DISTRICT STANDARDS.

NORTH

BUILDING D - REMODEL FLOOR PLAN | 1/8" = 1'-0" | 1

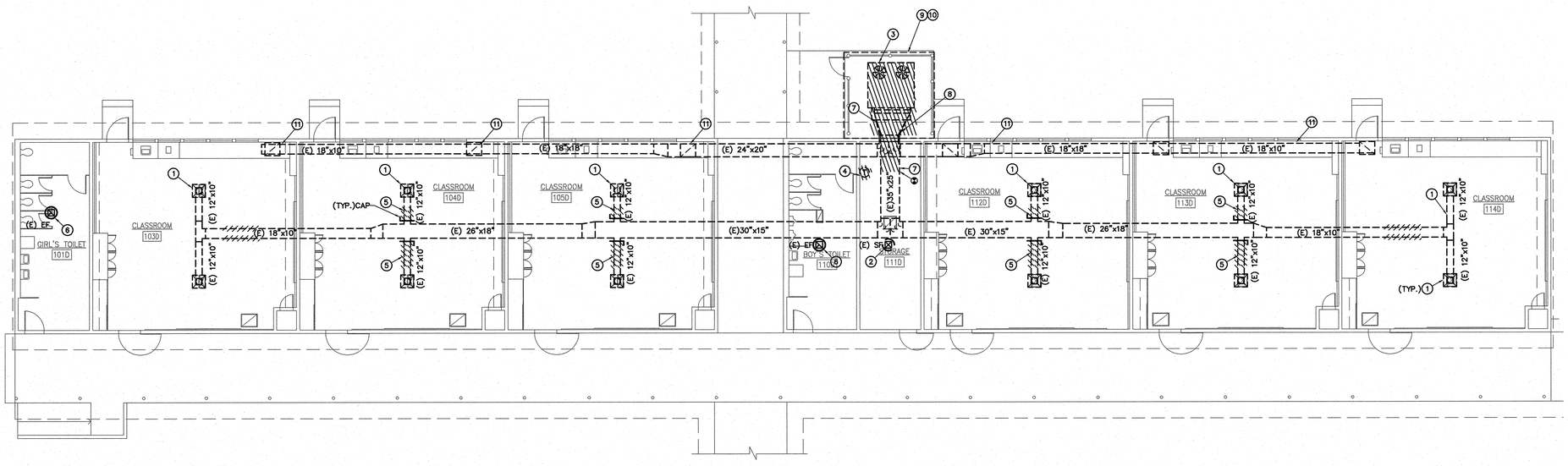

DEMOLITION KEY NOTES:

1. EXISTING MAIN SUPPLY DUCTWORK AND SUPPLY AIR DIFFUSERS TO REMAIN.
2. EXISTING SUPPLY FAN AND DUCTWORK TO REMAIN.
3. EXISTING AC UNIT, AC UNIT CURB AND RELATED ACCESSORIES TO BE REMOVED AND REPLACED WITH NEW AC UNIT.
4. EXISTING T-STAT TO BE REMOVED.
5. PARTIAL EXISTING SUPPLY AIR DUCT AND EXISTING MANUAL VOLUME DAMPER TO BE REMOVED. CAP UNUSED DUCT OPENING.
6. EXISTING EXHAUST FAN AND DUCTWORK TO REMAIN.
7. EXISTING 30"X25" MAIN SUPPLY AIR DUCT TO BE REMOVED AND REPLACED.
8. EXISTING 35"X25" RETURN DUCT TO BE REMOVED AND REPLACED.
9. EXISTING CONCRETE PAD TO BE REMOVED AND REPLACED WITH A NEW PAD.
10. EXISTING FENCE TO BE REMOVED AND REPLACED WITH A NEW FENCE AT A NEW LOCATION.
11. EXISTING MAIN RETURN DUCT AND AIR GRILLES TO REMAIN.

GENERAL DEMOLITION NOTES

1. OWNER SHALL HAVE FIRST RIGHT OF REFUSAL ON ALL ITEMS TO BE REMOVED.CONTRACTOR SHALL VERIFY ALL SUCH ITEMS WITH OWNER PRIOR TO REMOVAL. ALL ITEMS NOT REFUSED BY OWNER SHALL BE REMOVED INTACT AND FULLY FUNCTIONAL BY REFUSED BY OWNER SHALL BE PROPERLY DISPOSED OF BY CONTRACTOR.
2. CONTRACTOR SHALL RE-USE EXISTING OPENINGS IN WALLS AND ROOF WHEREVER POSSIBLE. COORDINATE WITH OTHER TRADES AS NECESSARY. GENERAL CONTRACTOR SHALL MODIFY OPENING AS REQUIRED TO ACCOMMODATE NEW MECHANICAL DEVICE.
3. GENERAL CONTRACTOR SHALL PATCH ALL OPENINGS IN WALLS, ROOF, ETC. THAT WILL NOT BE REUSED FOR FUTURE WORK. COORDINATE AS NECESSARY WITH OTHER TRADES.
4. CONTRACTOR SHALL COORDINATE WITH OWNER PRIOR TO ANY WORK BEING DONE STORAGE OF MECHANICAL EQUIPMENT TO BE RE-USED DURING CONSTRUCTION.
5. PRIOR TO ANY WORK BEING DONE CONTRACTOR SHALL MAKE A CAREFUL EVALUATION OF THE EXISTING CONDITIONS AND VERIFY ALL METHODS OF REMOVAL AND INSTALLATION OF MECHANICAL EQUIPMENT.
6. CONTRACTOR SHALL COORDINATE ALL DEMOLITION WORK WITH THE WORK OF ALL OTHER TRADES.
7. CONTRACTOR SHALL CLEAN ALL AIR DEVICES AND DUCTWORK TO REMAIN PER SPECIFICATIONS.
8. CONTRACTOR SHALL CLEAN ALL EXISTING DUCTWORK INCLUDING LINED DUCTWORK TO REMAIN PER SPECIFICATIONS. PRIOR TO BID AND BEFORE COMMENCEMENT OF ANY WORK ALL EXISTING DUCTWORK TO REMAIN SHALL BE CONFIRMED ON SITE.

NORTH

BUILDING D - DEMOLITION FLOOR PLAN | 1/8" = 1'-0" | 2

WLC ARCHITECTS
CLIENT FOCUSED • PASSION DRIVEN

SOUTHERN CALIFORNIA
8163 ROCHESTER AVENUE, SUITE 100
RANCHO CUCAMONGA
CALIFORNIA 91730-0729
TEL: 909-987-0909
www.wlcarchitects.com

LONGFELLOW ELEMENTARY SCHOOL HVAC REPLACEMENT

COMPTON UNIFIED SCHOOL DISTRICT
1101 S DWIGHT AVE.
COMPTON, CA 90220

LICENSED ARCHITECT — MARK GRAHAM — C-26046 — 03-31-19 — STATE OF CALIFORNIA

REGISTERED PROFESSIONAL ENGINEER — BRIAN BAMERAS — No. M29253 — Exp. 6/30/19 — MECHANICAL — STATE OF CALIFORNIA

CONSULTANT

FILE: 19-23

IDENTIFICATION STAMP
DIV. OF THE STATE ARCHITECT
OFFICE OF REGULATION SERVICES
APPL 03-118423
AC ___ FLS ___ SS IEY
DATE MAR 0 8 2018

NO	DATE	BY	DESCRIPTION
1			REVISIONS

DRAWN: KC	CHECKED:
DATE: 3/6/2018	SCALE:
PROJECT NUMBER: 570064	

BUILDING D DEMO AND REMODEL FLOOR PLANS

DRAWING NUMBER: M-2.2

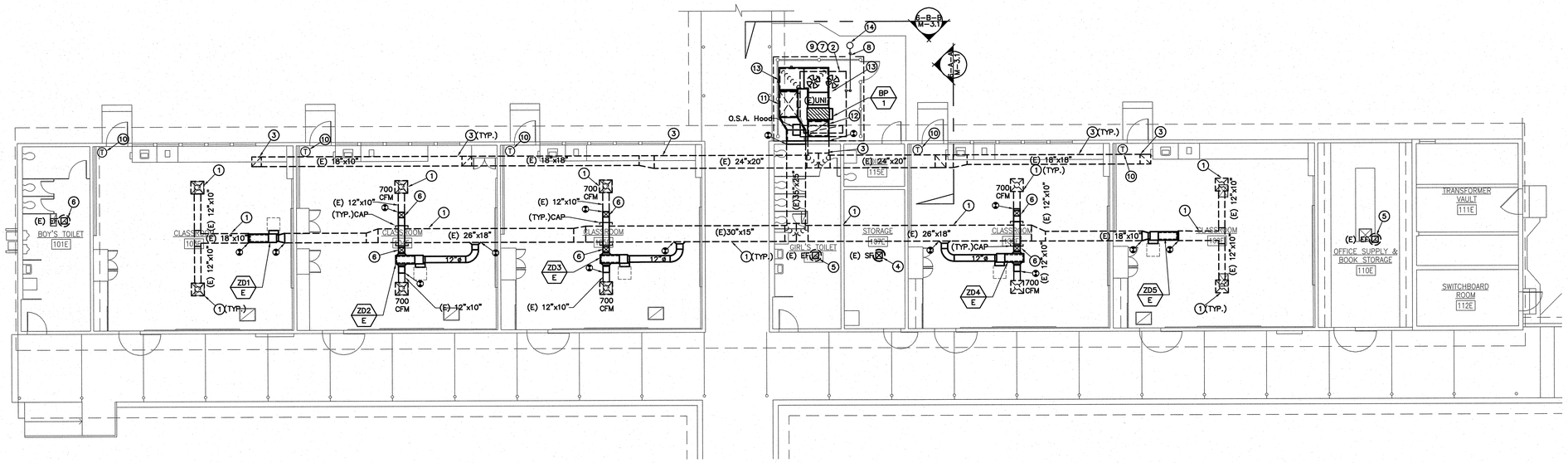

BUILDING E - REMODEL FLOOR PLAN | 1/8" = 1'-0" | 1

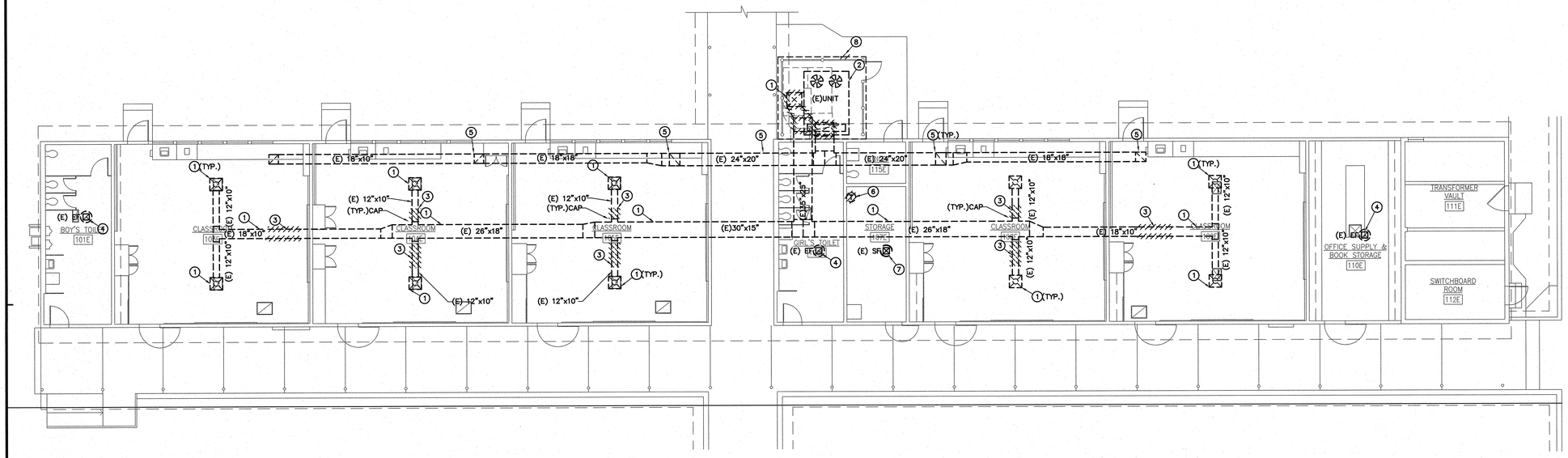

BUILDING E - DEMOLITION FLOOR PLAN | 1/8" = 1'-0" | 2

CONSTRUCTION KEY NOTES:

1. EXISTING MAIN SUPPLY DUCTWORK AND SUPPLY AIR DIFFUSERS TO REMAIN.SEE SHEET #2,#3, AND #4/M-4.1 FOR CEILING DIFFUSER AND DUCT SUPPORT DETAIL.
2. EXISTING UNIT TO REMIAN
3. EXISTING MAIN RETURN DUCT AND GRILLES TO REMAIN.SEE SHEET #2,#3, AND #4/M-4.1 FOR CEILING DIFFUSER AND DUCT SUPPORT DETAIL.
4. EXISTING SUPPLY FAN AND DUCTWORK TO REMAIN.
5. EXISTING EXHAUST FAN AND DUCTWORK TO REMAIN.
6. CONTRACTOR TO OFFSET NEW (W) 12"x10" DUCT ABOVE MAIN SUPPLY DUCT.
7. CONTRACTOR TO PROVIDE EXTENSION ON GAS PIPING TO EXISTING .
8. CONTRACTOR TO PROVIDE AN EXTENSION ON CONDENSATE PIPING TO DRYWELL. PROVIDE NEW VENTED P-TRAP WHERE NECESSARY.
9. CONTRACTOR TO PROVIDE O.S.A. AND RETURN DAMPER IF EXISTING UNIT DOES NOT HAVE ONE.
10. ELECTRONIC EMS THERMOSTAT MOUNT AT 48" A.F.F. SEE DETAIL SHEET #7/M-4.1 FOR A/C CONTROL.
11. NEW 36"x28" (L) 40"x32" SUPPLY DUCT. CONTRACTOR TO PROVIDE CONNECTION TO EXISTING SUPPLY DUCT.
12. NEW 36"x28" (L) 40"x30" SUPPLY DUCT.
13. NEW 36"x12" (L) 40"x16" DUCT TO BE DUCTED TO BYPASS DAMPER AND SUPPLY DUCT.
14. NEW DRYWELL. SEE DETAIL SHEET #5/M-4.1.

CONSTRUCTION NOTES:

1. CONTRACTOR SHALL COORDINATE WORK WITH OTHER TRADES AS NECESSARY PRIOR TO INSTALLATION.
2. CONTRACTOR SHALL MAINTAIN PROPER CLEARANCES FROM ALL ELECTRICAL EQUIPMENT AND SERVICE CLEARANCES FOR MECHANICAL EQUIPMENT.
4. FRESH AIR INTAKES SHALL BE 10'-0" MIN. AWAY FROM ALL EXHAUST OUTLETS, PLUMBING VENTS, AND FLUES.
5. CONTRACTOR SHALL COORDINATE EXACT EQUIPMENT PAD SIZES AND LOCATIONS WITH OTHER TRADES PRIOR TO INSTALLATION.
6. MAINTAIN MANUFACTURER MIN. CLEARANCES ON ALL AC UNITS.
7. BEFORE BIDDING ON THIS WORK, THE CONTRACTOR SHALL MAKE A CAREFUL EXAMINATION OF THE PREMISES, EXISTING EQUIPMENT AND SERVICES. HE SHALL DEFINITELY DETERMINE IN ADVANCE, THE METHODS OF INSTALLING AND CONNECTING THE NEW EQUIPMENT, DUCTWORK, AND PIPING THE MEANS TO BE PROVIDED FOR GETTING THE EQUIPMENT AND MATERIALS INTO PLACE AND SHALL MAKE HIMSELF THOROUGHLY FAMILIAR WITH ALL OF THE REQUIREMENTS OF THE PROJECT. FAILURE TO VISIT THE SITE WILL IN NO WAY RELIEVE THE SUCCESSFUL CONTRACTOR OF THE NECESSITY OF FURNISHING ANY MATERIAL OR PERFORMING ANY WORK THAT MAY BE REQUIRED TO COMPLETE THE WORK IN ACCORDANCE WITH THE DRAWINGS AND SPECIFICATIONS. THIS ADDITIONAL WORK SHALL BE PERFORMED WITHOUT ADDITIONAL COST TO THE OWNER.
8. BEFORE COMMENCEMENT OF WORK, THE CONTRACTOR SHALL VERIFY THE EXACT LOCATIONS AND DIMENSIONS OF ALL EXISTING EQUIPMENT AND ELECTRICAL SERVICES IN THE AREA OF CONSTRUCTION AND NOTIFY THE ENGINEER OF ANY DISCREPANCIES.
9. ALL NEW EXPOSED SHEET METAL DUCTWORK, SHEET METAL CURB / PLATFORM AND DUCT SUPPORT SHALL BE PREPARED AND PAINTED PER DISTRICT STANDARDS.

NORTH

DEMOLITION KEY NOTES:

1. EXISTING MAIN SUPPLY DUCTWORK AND SUPPLY AIR DIFFUSERS TO REMAIN.
2. EXISTING AC UNIT, AC UNIT CURB AND RELATED ACCESSORIES TO REMAIN.
3. PARTIAL EXISTING SUPPLY AIR DUCT AND EXISTING MANUAL VOLUME DAMPER TO BE REMOVED. CAP UNUSED DUCT OPENING.
4. EXISTING EXHAUST FAN AND DUCTWORK TO REMAIN.
5. EXISTING MAIN RETURN DUCT AND AIR GRILLES TO REMAIN.
6. EXISTING TSTAT TO BE REMOVED.
7. EXISTING SUPPLY FAN AND DUCTWORK TO REMAIN.
8. PORTION OF EXISTING UNIT PAD TO BE DEMO FOR CONDENSATE ROUTING TO DRYWELL.

GENERAL DEMOLITION NOTES

1. OWNER SHALL HAVE FIRST RIGHT OF REFUSAL ON ALL ITEMS TO BE REMOVED.CONTRACTOR SHALL VERIFY ALL SUCH ITEMS WITH OWNER PRIOR TO REMOVAL. ALL ITEMS NOT REFUSED BY OWNER SHALL BE REMOVED INTACT AND FULLY FUNCTIONAL BY REFUSED BY OWNER SHALL BE PROPERLY DISPOSED OF BY CONTRACTOR.
2. CONTRACTOR SHALL RE-USE EXISTING OPENINGS IN WALLS AND ROOF WHEREVER POSSIBLE. COORDINATE WITH OTHER TRADES AS NECESSARY. GENERAL CONTRACTOR SHALL MODIFY OPENING AS REQUIRED TO ACCOMMODATE NEW MECHANICAL DEVICE.
3. GENERAL CONTRACTOR SHALL PATCH ALL OPENINGS IN WALLS, ROOF, ETC. THAT WILL NOT BE REUSED FOR FUTURE WORK. COORDINATE AS NECESSARY WITH OTHER TRADES.
4. CONTRACTOR SHALL COORDINATE WITH OWNER PRIOR TO ANY WORK BEING DONE STORAGE OF MECHANICAL EQUIPMENT TO BE RE-USED DURING CONSTRUCTION.
5. PRIOR TO ANY WORK BEING DONE CONTRACTOR SHALL MAKE A CAREFUL EVALUATION OF THE EXISTING CONDITIONS AND VERIFY ALL METHODS OF REMOVAL AND INSTALLATION OF MECHANICAL EQUIPMENT.
6. CONTRACTOR SHALL COORDINATE ALL DEMOLITION WORK WITH THE WORK OF ALL OTHER TRADES.
7. CONTRACTOR SHALL CLEAN ALL AIR DEVICES AND DUCTWORK TO REMAIN PER SPECIFICATIONS.
8. CONTRACTOR SHALL CLEAN ALL EXISTING DUCTWORK INCLUDING LINED DUCTWORK TO REMAIN PER SPECIFICATIONS. PRIOR TO BID AND BEFORE COMMENCEMENT OF ANY WORK ALL EXISTING DUCTWORK TO REMAIN SHALL BE CONFIRMED ON SITE.

NORTH

WLC ARCHITECTS
CLIENT FOCUSED • PASSION DRIVEN

SOUTHERN CALIFORNIA
8163 ROCHESTER AVENUE, SUITE 100
RANCHO CUCAMONGA
CALIFORNIA 91730-0729
TEL: 909-987-0909
www.wlcarchitects.com

LONGFELLOW ELEMENTARY SCHOOL HVAC REPLACEMENT

COMPTON UNIFIED SCHOOL DISTRICT
1101 S DWIGHT AVE.
COMPTON, CA 90220

LICENSED ARCHITECT MARK GRAHAM C-26046 03-31-19 STATE OF CALIFORNIA

REGISTERED PROFESSIONAL ENGINEER JEFF BAKER No. M29253 Exp. 6/30/19 MECHANICAL STATE OF CALIFORNIA

CONSULTANT

IDENTIFICATION STAMP DIV. OF THE STATE ARCHITECT OFFICE OF REGULATION SERVICES
APPL 03-118423
AC FLS SS EY
DATE NOV 0 2018
FILE: 19-23

NO	DATE	BY	DESCRIPTION
			REVISIONS

DRAWN: KC	CHECKED:
DATE: 3/6/2018	SCALE:
PROJECT NUMBER: 570064	

BUILDING E DEMO AND REMODEL FLOOR PLANS

DRAWING NUMBER: M-2.3

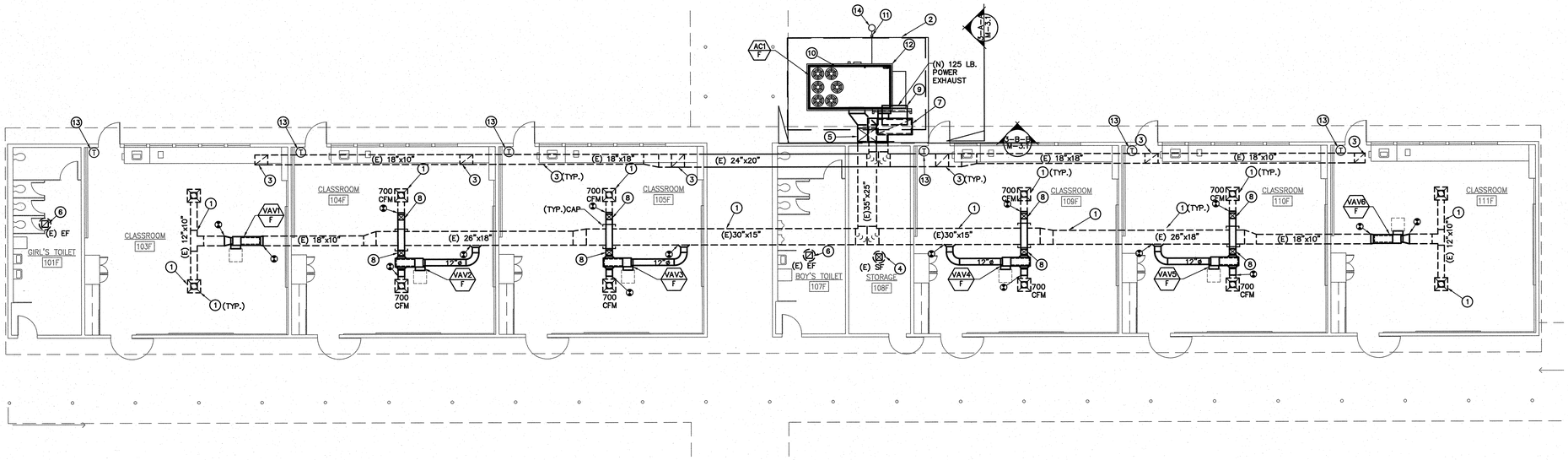

CONSTRUCTION KEY NOTES:

1. EXISTING MAIN SUPPLY DUCTWORK AND SUPPLY AIR DIFFUSERS TO REMAIN.SEE SHEET #2,#3, AND #4/M-4.1 FOR CEILING DIFFUSER AND DUCT SUPPORT DETAIL.
2. NEW FENCE AND CONCRETE PAD.
3. EXISTING MAIN RETURN DUCT AND GRILLES TO REMAIN.SEE SHEET #2,#3, AND #4/M-4.1 FOR CEILING DIFFUSER AND DUCT SUPPORT DETAIL.
4. EXISTING SUPPLY FAN AND DUCTWORK TO REMAIN.
5. NEW 35"X25"(L) SUPPLY AIR DUCT. 40"X28" SHEET METAL SIZES. SEE STRUCTURAL SHEET #1/S2.1.
6. EXISTING EXHAUST FAN AND DUCTWORK TO REMAIN.
7. NEW 60"X26"(L) RETURN AIR DUCT. 64"X30" SHEET METAL SIZES. SEE STRUCTURAL SHEET #1/S2.1.
8. CONTRACTOR TO OFFSET NEW (W) 12"X10" DUCT ABOVE MAIN SUPPLY DUCT.
9. POWER EXHAUST MOUNTED ON THE NEW RETURN DUCT. SEE STRUCTURAL SHEET #1/S2.1.
10. NEW AC UNIT WILL BE ON CONCRETE PAD. SEE DETAIL SHEET #10/M-4.1 FOR PAD.
11. 3/4" CONDENSATE DRAIN TO DRYWELL. PROVIDE NEW VENTED P-TRAP IF NECESSARY.
12. CONTRACTOR TO PROVIDE EXTENSION ON GAS PIPING AS REQUIRED TO RECONNECT EXISTING GAS PIPING TO NEW AC UNIT.
13. ELECTRONIC EMS THERMOSTAT MOUNT AT 48" A.F.F. SEE DETAIL SHEET #7/M-4.1 FOR A/C CONTROL.
14. NEW DRY WELL. SEE DETAIL SHEET #5/M-4.1.

CONSTRUCTION NOTES:

1. CONTRACTOR SHALL COORDINATE WORK WITH OTHER TRADES AS NECESSARY PRIOR TO INSTALLATION.
2. CONTRACTOR SHALL MAINTAIN PROPER CLEARANCES FROM ALL ELECTRICAL EQUIPMENT AND SERVICE CLEARANCES FOR MECHANICAL EQUIPMENT.
4. FRESH AIR INTAKES SHALL BE 10'-0" MIN. AWAY FROM ALL EXHAUST OUTLETS, PLUMBING VENTS, AND FLUES.
5. CONTRACTOR SHALL COORDINATE EXACT EQUIPMENT PAD SIZES AND LOCATIONS WITH OTHER TRADES PRIOR TO INSTALLATION.
6. MAINTAIN MANUFACTURER MIN. CLEARANCES ON ALL AC UNITS.
7. BEFORE BIDDING ON THIS WORK, THE CONTRACTOR SHALL MAKE A CAREFUL EXAMINATION OF THE PREMISES, EXISTING EQUIPMENT AND SERVICES. HE SHALL DEFINITELY DETERMINE IN ADVANCE, THE METHODS OF INSTALLING AND CONNECTING THE NEW EQUIPMENT, DUCTWORK, AND PIPING THE MEANS TO BE PROVIDED FOR GETTING THE EQUIPMENT AND MATERIALS INTO PLACE AND SHALL MAKE HIMSELF THOROUGHLY FAMILIAR WITH ALL OF THE REQUIREMENTS OF THE PROJECT. FAILURE TO VISIT THE SITE WILL IN NO WAY RELIEVE THE SUCCESSFUL CONTRACTOR OF THE NECESSITY OF FURNISHING ANY MATERIAL OR PERFORMING ANY WORK THAT MAY BE REQUIRED TO COMPLETE THE WORK IN ACCORDANCE WITH THE DRAWINGS AND SPECIFICATIONS. THIS ADDITIONAL WORK SHALL BE PERFORMED WITHOUT ADDITIONAL COST TO THE OWNER.
8. BEFORE COMMENCEMENT OF WORK, THE CONTRACTOR SHALL VERIFY THE EXACT LOCATIONS AND DIMENSIONS OF ALL EXISTING EQUIPMENT AND ELECTRICAL SERVICES IN THE AREA OF CONSTRUCTION AND NOTIFY THE ENGINEER OF ANY DISCREPANCIES.
9. ALL NEW EXPOSED SHEET METAL DUCTWORK, SHEET METAL CURB / PLATFORM AND DUCT SUPPORT SHALL BE PREPARED AND PAINTED PER DISTRICT STANDARDS.

NORTH

BUILDING F - REMODEL FLOOR PLAN | 1/8" = 1'-0" | 1

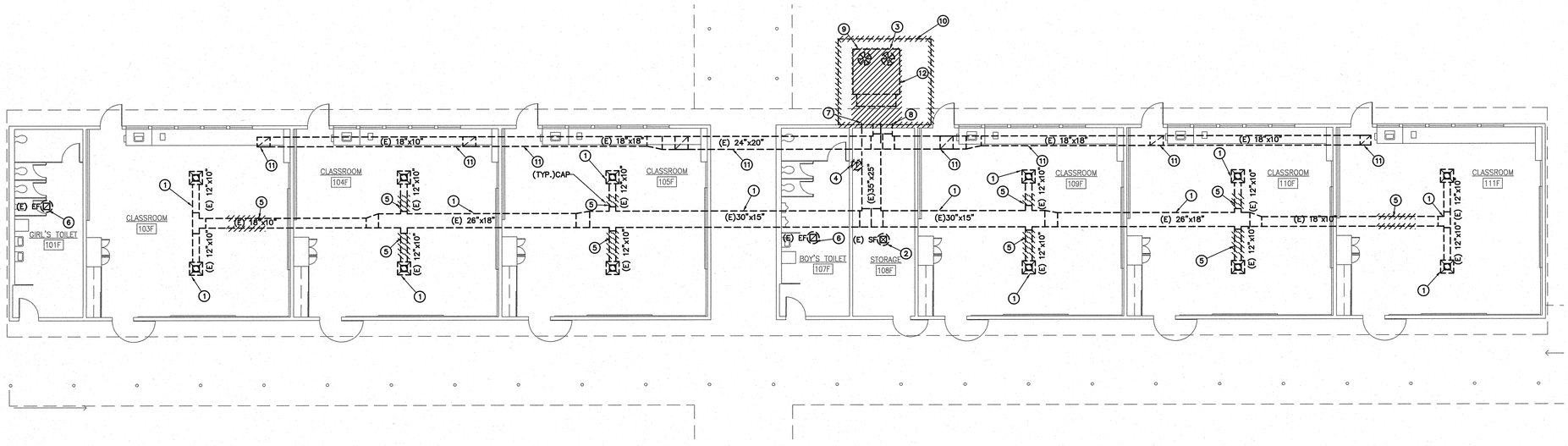

DEMOLITION KEY NOTES:

1. EXISTING MAIN SUPPLY DUCTWORK AND SUPPLY AIR DIFFUSERS TO REMAIN.
2. EXISTING SUPPLY FAN AND DUCTWORK TO REMAIN.
3. EXISTING AC UNIT, AC UNIT CURB AND RELATED ACCESSORIES TO BE REMOVED AND REPLACED WITH NEW AC UNIT.
4. EXISTING T-STAT TO BE REMOVED.
5. PARTIAL EXISTING SUPPLY AIR DUCT AND EXISTING MANUAL VOLUME DAMPER TO BE REMOVED. CAP UNUSED DUCT OPENING.
6. EXISTING EXHAUST FAN AND DUCTWORK TO REMAIN.
7. EXISTING 30"X25" MAIN SUPPLY AIR DUCT TO BE REMOVED AND REPLACED.
8. EXISTING 35"X25" RETURN DUCT TO BE REMOVED AND REPLACED.
9. EXISTING CONCRETE PAD TO BE REMOVED AND REPLACED WITH A NEW PAD.
10. EXISTING FENCE TO BE REMOVED AND REPLACED WITH A NEW FENCE AT A NEW LOCATION.
11. EXISTING MAIN RETURN DUCT AND AIR GRILLES TO REMAIN.
12. EXISTING AC UNIT CURB AND RELATED ACCESSORIES TO BE REMOVED AND REPLACED WITH NEW.

GENERAL DEMOLITION NOTES

1. OWNER SHALL HAVE FIRST RIGHT OF REFUSAL ON ALL ITEMS TO BE REMOVED.CONTRACTOR SHALL VERIFY ALL SUCH ITEMS WITH OWNER PRIOR TO REMOVAL. ALL ITEMS NOT REFUSED BY OWNER SHALL BE REMOVED INTACT AND FULLY FUNCTIONAL BY REFUSED BY OWNER SHALL BE PROPERLY DISPOSED OF BY CONTRACTOR.
2. CONTRACTOR SHALL RE-USE EXISTING OPENINGS IN WALLS AND ROOF WHEREVER POSSIBLE. COORDINATE WITH OTHER TRADES AS NECESSARY. GENERAL CONTRACTOR SHALL MODIFY OPENING AS REQUIRED TO ACCOMMODATE NEW MECHANICAL DEVICE.
3. GENERAL CONTRACTOR SHALL PATCH ALL OPENINGS IN WALLS, ROOF, ETC. THAT WILL NOT BE REUSED FOR FUTURE WORK. COORDINATE AS NECESSARY WITH OTHER TRADES.
4. CONTRACTOR SHALL COORDINATE WITH OWNER PRIOR TO ANY WORK BEING DONE STORAGE OF MECHANICAL EQUIPMENT TO BE RE-USED DURING CONSTRUCTION.
5. PRIOR TO ANY WORK BEING DONE CONTRACTOR SHALL MAKE A CAREFUL EVALUATION OF THE EXISTING CONDITIONS AND VERIFY ALL METHODS OF REMOVAL AND INSTALLATION OF MECHANICAL EQUIPMENT.
6. CONTRACTOR SHALL COORDINATE ALL DEMOLITION WORK WITH THE WORK OF ALL OTHER TRADES.
7. CONTRACTOR SHALL CLEAN ALL AIR DEVICES AND DUCTWORK TO REMAIN PER SPECIFICATIONS.
8. CONTRACTOR SHALL CLEAN ALL EXISTING DUCTWORK INCLUDING LINED DUCTWORK TO REMAIN PER SPECIFICATIONS. PRIOR TO BID AND BEFORE COMMENCEMENT OF ANY WORK ALL EXISTING DUCTWORK TO REMAIN SHALL BE CONFIRMED ON SITE.

NORTH

BUILDING F - DEMOLITION FLOOR PLAN | 1/8" = 1'-0" | 2

ARCHITECTS
WLC
CLIENT FOCUSED • PASSION DRIVEN

SOUTHERN CALIFORNIA
8163 ROCHESTER AVENUE, SUITE 100
RANCHO CUCAMONGA
CALIFORNIA 91730-0729

TEL: 909-987-0909
www.wlcarchitects.com

LONGFELLOW ELEMENTARY SCHOOL HVAC REPLACEMENT

COMPTON UNIFIED SCHOOL DISTRICT
1101 S DWIGHT AVE.
COMPTON, CA 90220

LICENSED ARCHITECT MARK GRAHAM C-26046 03-31-19 STATE OF CALIFORNIA

REGISTERED PROFESSIONAL ENGINEER BAKERJIAN No. M28253 Exp. 6/30/19 MECHANICAL STATE OF CALIFORNIA

CONSULTANT

IDENTIFICATION STAMP DIV. OF THE STATE ARCHITECT OFFICE OF REGULATION SERVICES
APPL 03-118423
AC — FLS — SS — EY
DATE MAY 0 9 2019
FILE: 19-23

NO	DATE	BY	DESCRIPTION
1			REVISIONS

DRAWN: KC	CHECKED:
DATE: 3/6/2018	SCALE:
PROJECT NUMBER: 570064	

BUILDING F DEMO AND REMODEL FLOOR PLANS

DRAWING NUMBER: M-2.4

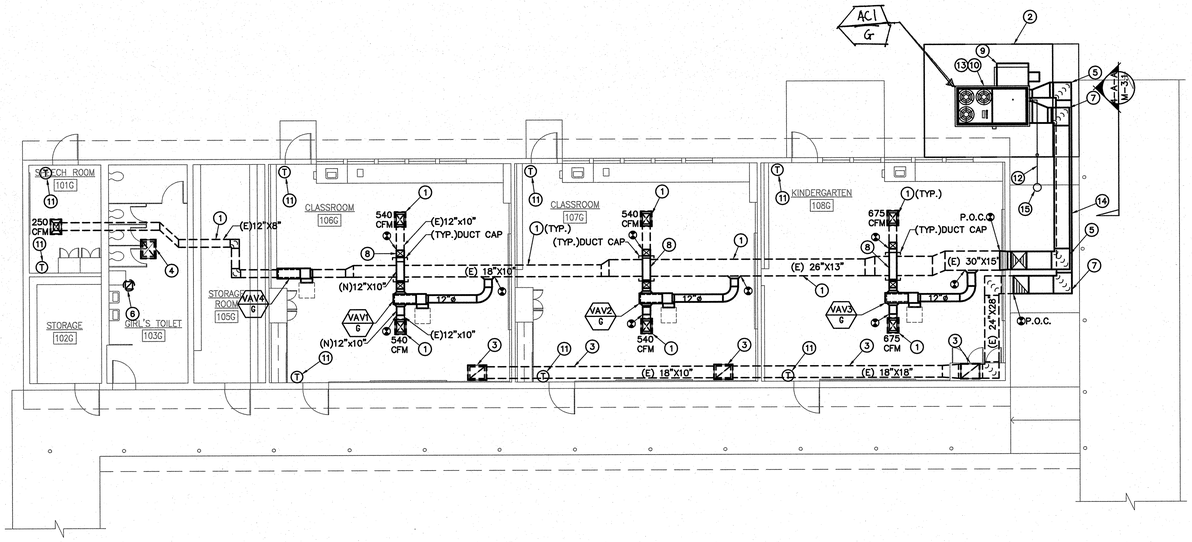

CONSTRUCTION KEY NOTES:

1. EXISTING MAIN SUPPLY DUCTWORK AND SUPPLY AIR DIFFUSERS TO REMAIN.SEE SHEET #2,#3, AND #4/M-4.1 FOR CEILING DIFFUSER AND DUCT SUPPORT DETAIL.
2. NEW FENCE AND CONCRETE PAD. SEE ARCHITECT SHEET FOR MORE DETAILS.
3. EXISTING MAIN RETURN DUCT AND GRILLES TO REMAIN.SEE SHEET #2,#3, AND #4/M-4.1 FOR CEILING DIFFUSER AND DUCT SUPPORT DETAIL.
4. EXISTING MAKE UP AIR HOOD AND DUCTWORK TO REMAIN.
5. NEW 24"X20"(L) SUPPLY AIR DUCT ON TOP. 28"X24" SHEET METAL SIZES. SEE STRUCTURAL SHEET DETAIL #3/S2.1 FOR DUCT SUPPORT.
6. EXISTING EXHAUST FAN AND DUCTWORK TO REMAIN.
7. NEW 24"X20"(L) RETURN AIR DUCT ON BOTTOM. 28"X24" SHEET METAL SIZES. SEE STRUCTURAL SHEET DETAIL #3/S2.1 FOR DUCT SUPPORT.
8. CONTRACTOR TO OFFSET NEW (W) 12"X10" DUCT ABOVE MAIN EXISTING SUPPLY DUCT.
9. POWER EXHAUST MOUNTED ON THE AC UNIT.
10. AC UNIT WILL BE ON 14" FACTORY CURB FOR POWER EXHAUST. SEE SCHEDULE SHEET M-0.2 AC UNIT SCHEDULE REMARK # 6 FOR CURB.
11. ELECTRONIC EMS THERMOSTAT MOUNT AT 48" A.F.F. SEE DETAIL SHEET #7/M-4.1 FOR A/C CONTROL.
12. 3/4" CONDENSATE DRAIN TO DRY WELL. PROVIDE NEW VENTED P-TRAP IF NECESSARY.
13. CONTRACTOR TO PROVIDE EXTENSION ON GAS AND CONDENSATE PIPING TO NEW AC UNITS.
14. SEE STRUCTURAL SHEET DETAIL #3/S2.1 FOR DUCT SUPPORT.
15. NEW DRY WELL. SEE DETAIL SHEET #5/M-4.1.

CONSTRUCTION NOTES:

1. CONTRACTOR SHALL COORDINATE WORK WITH OTHER TRADES AS NECESSARY PRIOR TO INSTALLATION.
2. CONTRACTOR SHALL MAINTAIN PROPER CLEARANCES FROM ALL ELECTRICAL EQUIPMENT AND SERVICE CLEARANCES FOR MECHANICAL EQUIPMENT.
3. FRESH AIR INTAKES SHALL BE 10'-0" MIN. AWAY FROM ALL EXHAUST OUTLETS, PLUMBING VENTS, AND FLUES.
4. CONTRACTOR SHALL COORDINATE EXACT EQUIPMENT PAD SIZES AND LOCATIONS WITH OTHER TRADES PRIOR TO INSTALLATION.
5. MAINTAIN MANUFACTURER MIN. CLEARANCES ON ALL AC UNITS.
6. BEFORE BIDDING ON THIS WORK, THE CONTRACTOR SHALL MAKE A CAREFUL EXAMINATION OF THE PREMISES, EXISTING EQUIPMENT AND SERVICES. HE SHALL DEFINITELY DETERMINE IN ADVANCE, THE METHODS OF INSTALLING AND CONNECTING THE NEW EQUIPMENT, DUCTWORK, AND PIPING THE MEANS TO BE PROVIDED FOR GETTING THE EQUIPMENT AND MATERIALS INTO PLACE AND SHALL MAKE HIMSELF THOROUGHLY FAMILIAR WITH ALL OF THE REQUIREMENTS OF THE PROJECT. FAILURE TO VISIT THE SITE WILL IN NO WAY RELIEVE THE SUCCESSFUL CONTRACTOR OF THE NECESSITY OF FURNISHING ANY MATERIAL OR PERFORMING ANY WORK THAT MAY BE REQUIRED TO COMPLETE THE WORK IN ACCORDANCE WITH THE DRAWINGS AND SPECIFICATIONS. THIS ADDITIONAL WORK SHALL BE PERFORMED WITHOUT ADDITIONAL COST TO THE OWNER.
7. BEFORE COMMENCEMENT OF WORK, THE CONTRACTOR SHALL VERIFY THE EXACT LOCATIONS AND DIMENSIONS OF ALL EXISTING EQUIPMENT AND ELECTRICAL SERVICES IN THE AREA OF CONSTRUCTION AND NOTIFY THE ENGINEER OF ANY DISCREPANCIES.
8. ALL NEW EXPOSED SHEET METAL DUCTWORK, SHEET METAL CURB / PLATFORM AND DUCT SUPPORT SHALL BE PREPARED AND PAINTED PER DISTRICT STANDARDS.

NORTH

BUILDING G - REMODEL FLOOR PLAN | 1/8" = 1'-0" | 1

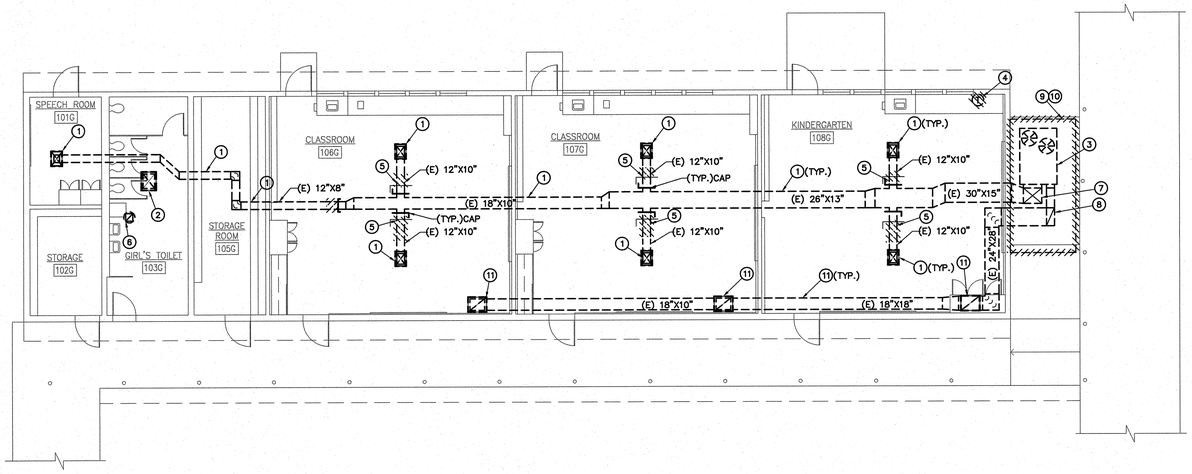

DEMOLITION KEY NOTES:

1. EXISTING MAIN SUPPLY DUCTWORK AND SUPPLY AIR DIFFUSERS TO REMAIN.
2. EXISTING MAKE UP AIR HOOD AND DUCTWORK TO REMAIN.
3. EXISTING AC UNIT, AC UNIT CURB AND RELATED ACCESSORIES TO BE REMOVED AND REPLACED WITH NEW AC UNIT.
4. EXISTING T-STAT TO BE REMOVED.
5. PARTIAL EXISTING SUPPLY AIR DUCT AND EXISTING MANUAL VOLUME DAMPER TO BE REMOVED. CAP UNUSED DUCT OPENING.
6. EXISTING EXHAUST FAN AND DUCTWORK TO REMAIN.
7. EXISTING 30"X15"(L) MAIN SUPPLY AIR DUCT TO BE REMOVED AND REPLACED.
8. EXISTING 24"X28" (L) RETURN DUCT TO BE REMOVED AND REPLACED.
9. EXISTING CONCRETE PAD TO BE REMOVED AND REPLACED WITH A NEW PAD.
10. EXISTING FENCE TO BE REMOVED AND REPLACED WITH A NEW FENCE. SEE ARCHITECT SHEET FOR MORE DETAILS.
11. EXISTING MAIN RETURN DUCT AND AIR GRILLES TO REMAIN.

GENERAL DEMOLITION NOTES

1. OWNER SHALL HAVE FIRST RIGHT OF REFUSAL ON ALL ITEMS TO BE REMOVED.CONTRACTOR SHALL VERIFY ALL SUCH ITEMS WITH OWNER PRIOR TO REMOVAL. ALL ITEMS NOT REFUSED BY OWNER SHALL BE REMOVED INTACT AND FULLY FUNCTIONAL BY REFUSED BY OWNER SHALL BE PROPERLY DISPOSED OF BY CONTRACTOR.
2. CONTRACTOR SHALL RE-USE EXISTING OPENINGS IN WALLS AND ROOF WHEREVER POSSIBLE. COORDINATE WITH OTHER TRADES AS NECESSARY. GENERAL CONTRACTOR SHALL MODIFY OPENING AS REQUIRED TO ACCOMMODATE NEW MECHANICAL DEVICE.
3. GENERAL CONTRACTOR SHALL PATCH ALL OPENINGS IN WALLS, ROOF, ETC. THAT WILL NOT BE REUSED FOR FUTURE WORK. COORDINATE AS NECESSARY WITH OTHER TRADES.
4. PRIOR TO ANY WORK BEING DONE CONTRACTOR SHALL MAKE A CAREFUL EVALUATION OF THE EXISTING CONDITIONS AND VERIFY ALL METHODS OF REMOVAL AND INSTALLATION OF MECHANICAL EQUIPMENT.
5. CONTRACTOR SHALL COORDINATE ALL DEMOLITION WORK WITH THE WORK OF ALL OTHER TRADES.
6. CONTRACTOR SHALL CLEAN ALL AIR DEVICES AND DUCTWORK TO REMAIN PER SPECIFICATIONS.
7. CONTRACTOR SHALL CLEAN ALL EXISTING DUCTWORK INCLUDING LINED DUCTWORK TO REMAIN PER SPECIFICATIONS. PRIOR TO BID AND BEFORE COMMENCEMENT OF ANY WORK ALL EXISTING DUCTWORK TO REMAIN SHALL BE CONFIRMED ON SITE.

NORTH

BUILDING G - DEMOLITION FLOOR PLAN | 1/8" = 1'-0" | 2

WLC ARCHITECTS
CLIENT FOCUSED • PASSION DRIVEN
SOUTHERN CALIFORNIA
8163 ROCHESTER AVENUE, SUITE 100
RANCHO CUCAMONGA
CALIFORNIA 91730-0729
TEL: 909-987-0909
www.wlcarchitects.com

LONGFELLOW ELEMENTARY SCHOOL HVAC REPLACEMENT

COMPTON UNIFIED SCHOOL DISTRICT
1101 S DWIGHT AVE.
COMPTON, CA 90220

LICENSED ARCHITECT MARK GRAHAM C-26546 03-31-19 STATE OF CALIFORNIA
REGISTERED PROFESSIONAL ENGINEER JAMES BARFIELD No. M29253 Exp. 6/30/19 MECHANICAL STATE OF CALIFORNIA

CONSULTANT

IDENTIFICATION STAMP DIV. OF THE STATE ARCHITECT OFFICE OF REGULATION SERVICES
APPL 03-118423
AC FLS SS EY
DATE MAR 05 2018
FILE: 19-23

NO	DATE	BY	DESCRIPTION
1			REVISIONS

DRAWN: KC | CHECKED:
DATE: 3/6/2018 | SCALE:
PROJECT NUMBER: 570064

BUILDING G DEMO AND REMODEL FLOOR PLANS

DRAWING NUMBER: M-2.5

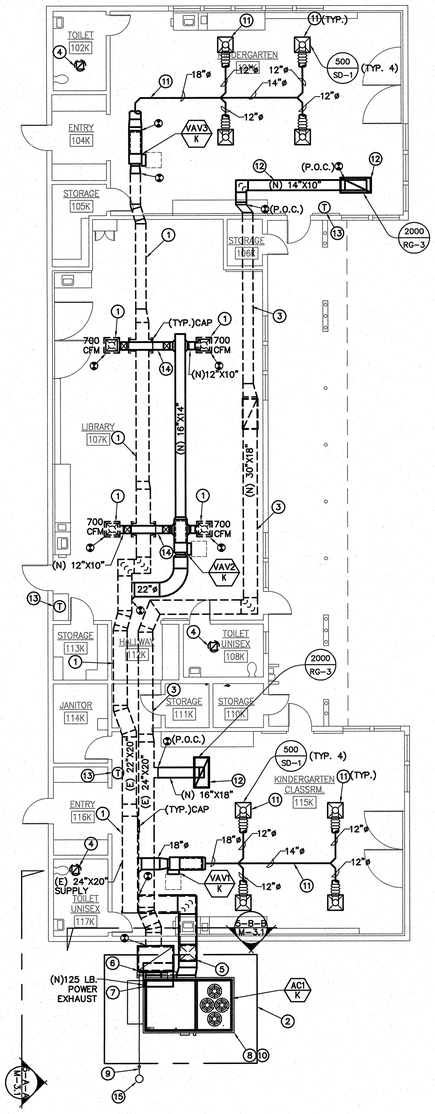

CONSTRUCTION KEY NOTES:

1. EXISTING MAIN SUPPLY DUCTWORK AND SUPPLY AIR DIFFUSERS TO REMAIN. SEE SHEET #2,#3, AND #4/M-4.1 FOR CEILING DIFFUSER AND DUCT SUPPORT DETAIL.
2. NEW FENCE AND CONCRETE PAD.
3. EXISTING MAIN RETURN DUCT AND GRILLES TO REMAIN.SEE SHEET #2,#3, AND #4/M-4.1 FOR CEILING DIFFUSER AND DUCT SUPPORT DETAIL.
4. EXISTING EXHAUST FAN AND DUCTWORK TO REMAIN.
5. NEW 24"X22"(L) SUPPLY AIR DUCT. 28"X26" SHEET METAL SIZES. SEE STRUCTURAL DETAIL SHEET #4/S2.1.
6. NEW 52"X36"(L) RETURN AIR DUCT. 56"X40" SHEET METAL SIZES. SEE STRUCTURAL DETAIL SHEET #4/S2.1.
7. POWER EXHAUST MOUNTED ON THE NEW RETURN DUCT. SEE STRUCTURAL DETAIL SHEET #4/S2.1.
8. NEW AC UNIT WILL BE ON CONCRETE PAD. SEE DETAIL SHEET 10/M-4.1 FOR PAD.
9. ¾" CONDENSATE DRAIN TO CONNECT TO NEW DRY WELL. PROVIDE NEW VENTED P-TRAP IF NECESSARY.
10. CONTRACTOR TO PROVIDE EXTENSION ON GAS AND CONDENSATE PIPING TO EXISTING . PROVIDE NEW VENTED P-TRAP WHERE NECESSARY.
11. NEW SUPPLY AIR DUCT AND DIFFUSER TO REPLACE EXISTING.SEE SHEET #2,#3, AND #4/M-4.1 FOR CEILING DIFFUSER AND DUCT SUPPORT DETAIL.
12. NEW RETURN DUCT AND GRILLE TO REPLACE EXISTING. SEE MECHANICAL DETAIL SHEET #4/M-4.1.
13. ELECTRONIC EMS THERMOSTAT MOUNT AT 48" A.F.F. SEE DETAIL SHEET #7/M-4.1 FOR A/C CONTROL.
14. CONTRACTOR TO OFFSET NEW (W) 12"X10" DUCT ABOVE MAIN SUPPLY DUCT. SEE MECHANICAL DETAIL SHEET.
15. NEW DRY WELL. SEE DETAIL SHEET #5/M-4.1.

CONSTRUCTION NOTES:

1. CONTRACTOR SHALL COORDINATE WORK WITH OTHER TRADES AS NECESSARY PRIOR TO INSTALLATION.
2. CONTRACTOR SHALL MAINTAIN PROPER CLEARANCES FROM ALL ELECTRICAL EQUIPMENT AND SERVICE CLEARANCES FOR MECHANICAL EQUIPMENT.
4. FRESH AIR INTAKES SHALL BE 10'-0" MIN. AWAY FROM ALL EXHAUST OUTLETS, PLUMBING VENTS, AND FLUES.
5. CONTRACTOR SHALL COORDINATE EXACT EQUIPMENT PAD SIZES AND LOCATIONS WITH OTHER TRADES PRIOR TO INSTALLATION.
6. MAINTAIN MANUFACTURER MIN. CLEARANCES ON ALL AC UNITS.
7. BEFORE BIDDING ON THIS WORK, THE CONTRACTOR SHALL MAKE A CAREFUL EXAMINATION OF THE PREMISES, EXISTING EQUIPMENT AND SERVICES. HE SHALL DEFINITELY DETERMINE IN ADVANCE, THE METHODS OF INSTALLING AND CONNECTING THE NEW EQUIPMENT, DUCTWORK, AND PIPING THE MEANS TO BE PROVIDED FOR GETTING THE EQUIPMENT AND MATERIALS INTO PLACE AND SHALL MAKE HIMSELF THOROUGHLY FAMILIAR WITH ALL OF THE REQUIREMENTS OF THE PROJECT. FAILURE TO VISIT THE SITE WILL IN NO WAY RELIEVE THE SUCCESSFUL CONTRACTOR OF THE NECESSITY OF FURNISHING ANY MATERIAL OR PERFORMING ANY WORK THAT MAY BE REQUIRED TO COMPLETE THE WORK IN ACCORDANCE WITH THE DRAWINGS AND SPECIFICATIONS. THIS ADDITIONAL WORK SHALL BE PERFORMED WITHOUT ADDITIONAL COST TO THE OWNER.
8. BEFORE COMMENCEMENT OF WORK, THE CONTRACTOR SHALL VERIFY THE EXACT LOCATIONS AND DIMENSIONS OF ALL EXISTING EQUIPMENT AND ELECTRICAL SERVICES IN THE AREA OF CONSTRUCTION AND NOTIFY THE ENGINEER OF ANY DISCREPANCIES.
9. ALL NEW EXPOSED SHEET METAL DUCTWORK, SHEET METAL CURB / PLATFORM AND DUCT SUPPORT SHALL BE PREPARED AND PAINTED PER DISTRICT STANDARDS.

NORTH

BUILDING K - REMODEL FLOOR PLAN | 1/8" = 1'-0" | 1

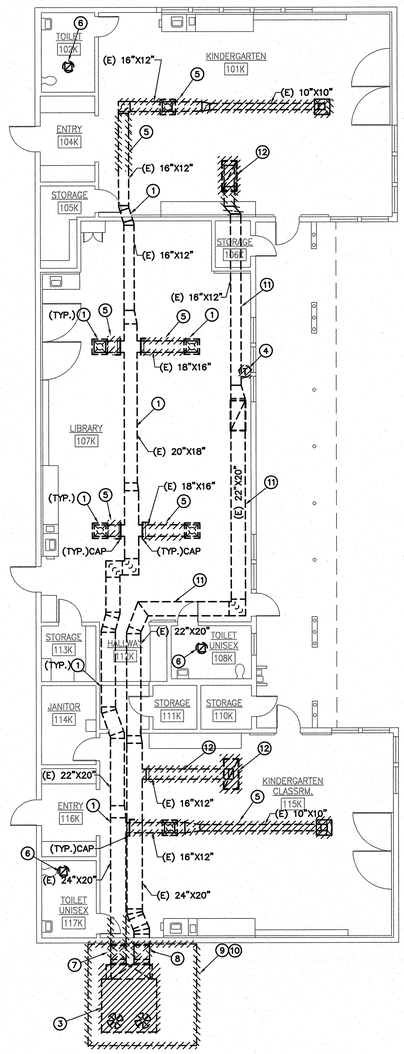

DEMOLITION KEY NOTES:

1. EXISTING MAIN SUPPLY DUCTWORK AND SUPPLY AIR DIFFUSERS TO REMAIN.
2.
3. EXISTING AC UNIT, AC UNIT CURB AND RELATED ACCESSORIES TO BE REMOVED AND REPLACED WITH NEW AC UNIT.
4. EXISTING T-STAT TO BE REMOVED.
5. PARTIAL EXISTING SUPPLY AIR DUCT AND EXISTING MANUAL VOLUME DAMPER TO BE REMOVED. CAP UNUSED DUCT OPENING.
6. EXISTING EXHAUST FAN AND DUCTWORK TO REMAIN.
7. EXISTING 24"X20" MAIN SUPPLY AIR DUCT TO BE REMOVED AND REPLACED.
8. EXISTING 24"X20" RETURN DUCT TO BE REMOVED AND REPLACED.
9. EXISTING CONCRETE PAD TO BE REMOVED AND REPLACED WITH A NEW PAD.
10. EXISTING FENCE TO BE REMOVED AND REPLACED WITH A NEW FENCE AT A NEW LOCATION.
11. EXISTING MAIN RETURN DUCT AND AIR GRILLES TO REMAIN.
12. EXISTING RETURN DUCT AND AIR GRILLES TO BE REMOVED.

GENERAL DEMOLITION NOTES

1. OWNER SHALL HAVE FIRST RIGHT OF REFUSAL ON ALL ITEMS TO BE REMOVED.CONTRACTOR SHALL VERIFY ALL SUCH ITEMS WITH OWNER PRIOR TO REMOVAL. ALL ITEMS NOT REFUSED BY OWNER SHALL BE REMOVED INTACT AND FULLY FUNCTIONAL BY REFUSED BY OWNER SHALL BE PROPERLY DISPOSED OF BY CONTRACTOR.
2. CONTRACTOR SHALL RE-USE EXISTING OPENINGS IN WALLS AND ROOF WHEREVER POSSIBLE. COORDINATE WITH OTHER TRADES AS NECESSARY. GENERAL CONTRACTOR SHALL MODIFY OPENING AS REQUIRED TO ACCOMMODATE NEW MECHANICAL DEVICE.
3. GENERAL CONTRACTOR SHALL PATCH ALL OPENINGS IN WALLS, ROOF, ETC. THAT WILL NOT BE REUSED FOR FUTURE WORK. COORDINATE AS NECESSARY WITH OTHER TRADES.
4. CONTRACTOR SHALL COORDINATE WITH OWNER PRIOR TO ANY WORK BEING DONE STORAGE OF MECHANICAL EQUIPMENT TO BE RE-USED DURING CONSTRUCTION.
5. PRIOR TO ANY WORK BEING DONE CONTRACTOR SHALL MAKE A CAREFUL EVALUATION OF THE EXISTING CONDITIONS AND VERIFY ALL METHODS OF REMOVAL AND INSTALLATION OF MECHANICAL EQUIPMENT.
6. CONTRACTOR SHALL COORDINATE ALL DEMOLITION WORK WITH THE WORK OF ALL OTHER TRADES.
7. CONTRACTOR SHALL CLEAN ALL AIR DEVICES AND DUCTWORK TO REMAIN PER SPECIFICATIONS.
8. CONTRACTOR SHALL CLEAN ALL EXISTING DUCTWORK INCLUDING LINED DUCTWORK TO REMAIN PER SPECIFICATIONS. PRIOR TO BID AND BEFORE COMMENCEMENT OF ANY WORK ALL EXISTING DUCTWORK TO REMAIN SHALL BE CONFIRMED ON SITE.

NORTH

BUILDING K - DEMOLITION FLOOR PLAN | 1/8" = 1'-0" | 2

ARCHITECTS
WLC
CLIENT FOCUSED • PASSION DRIVEN

SOUTHERN CALIFORNIA
8163 ROCHESTER AVENUE, SUITE 100
RANCHO CUCAMONGA
CALIFORNIA 91730-0729

TEL: 909-987-0909
www.wlcarchitects.com

LONGFELLOW ELEMENTARY SCHOOL HVAC REPLACEMENT

COMPTON UNIFIED SCHOOL DISTRICT
1101 S DWIGHT AVE.
COMPTON, CA 90220

LICENSED ARCHITECT — KEVIN GRAHAM — C-26046 — 03-31-19 — STATE OF CALIFORNIA

REGISTERED PROFESSIONAL ENGINEER — ROBERT BANKERD — No. M29253 — Exp. 6/30/19 — MECHANICAL — STATE OF CALIFORNIA

CONSULTANT

R.E. 19-23

IDENTIFICATION STAMP
DIV. OF THE STATE ARCHITECT
OFFICE OF REGULATION SERVICES
APPL 03-118423
AC — FLS — SS
DATE MAR 0 6 2018

NO	DATE	BY	DESCRIPTION
			REVISIONS

DRAWN: KC	CHECKED:
DATE: 3/6/2018	SCALE:
PROJECT NUMBER: 570064	

BUILDING K DEMO AND REMODEL FLOOR PLANS

DRAWING NUMBER: M-2.6

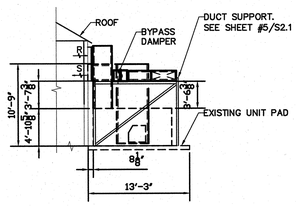

SECTION A-A

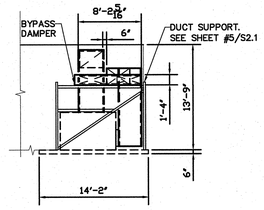

SECTION B-B

MECHANICAL SECTION BUILDING E

SCALE NONE 6

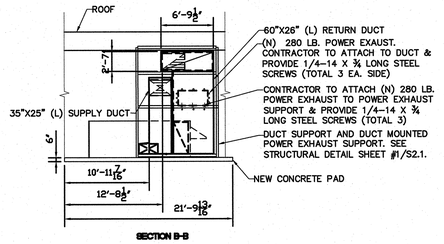

SECTION B-B

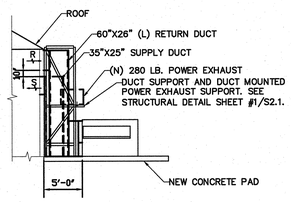

SECTION A-A

MECHANICAL SECTION BUILDING F

SCALE NONE 3

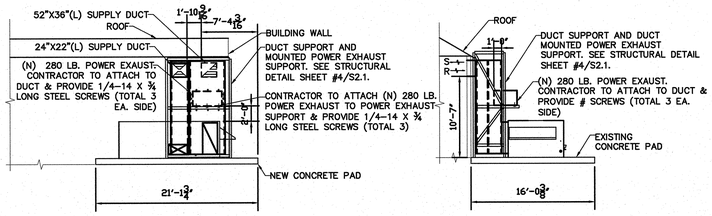

SECTION B-B

SECTION A-A

MECHANICAL SECTION BUILDING K

SCALE NONE 5

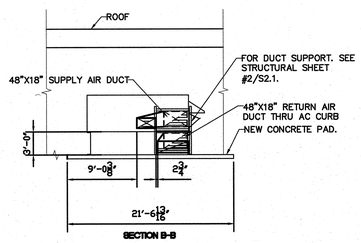

SECTION B-B

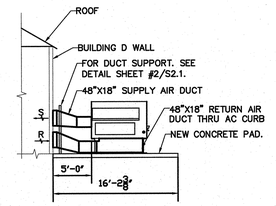

SECTION A-A

MECHANICAL SECTION BUILDING D

SCALE NONE 2

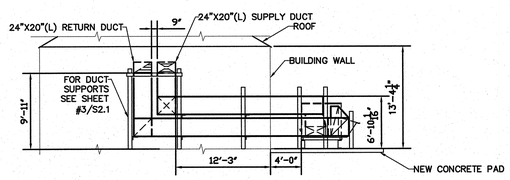

SECTION A-A

MECHANICAL SECTION BUILDING G

SCALE NONE 4

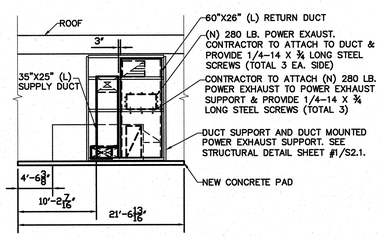

SECTION B-B

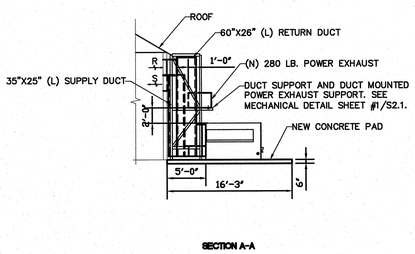

SECTION A-A

MECHANICAL SECTION BUILDING C

SCALE NONE 1

ARCHITECTS
WLC
CLIENT FOCUSED • PASSION DRIVEN

SOUTHERN CALIFORNIA
8163 ROCHESTER AVENUE, SUITE 100
RANCHO CUCAMONGA
CALIFORNIA 91730-0729

TEL: 909-987-0909

www.wlcarchitects.com

LONGFELLOW ELEMENTARY SCHOOL HVAC REPLACEMENT

COMPTON UNIFIED SCHOOL DISTRICT
1101 S DWIGHT AVE.
COMPTON, CA 90220

LICENSED ARCHITECT — MARK GRAHAM C-26046 03-31-19 — STATE OF CALIFORNIA

REGISTERED PROFESSIONAL ENGINEER — ROBERT BANEKOV No. M29253, Exp. 6/30/19 — MECHANICAL — STATE OF CALIFORNIA

CONSULTANT

IDENTIFICATION STAMP
DIV. OF THE STATE ARCHITECT
OFFICE OF REGULATION SERVICES
APPL 03-118423
AC — FLS SS KEY
DATE MAR 0 9 2018
FILE: 19-23

NO	DATE	BY	DESCRIPTION
			REVISIONS

DRAWN: KC	CHECKED:
DATE: 3/6/2018	SCALE:
PROJECT NUMBER: 570064	

MECHANICAL SECTIONS

DRAWING NUMBER: M-3.1

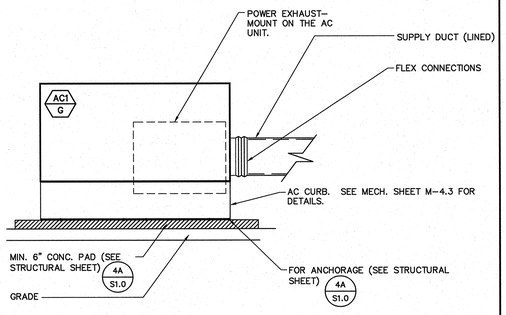

AC UNIT WITH CURB MOUNTING DETAIL

SCALE NONE | 13

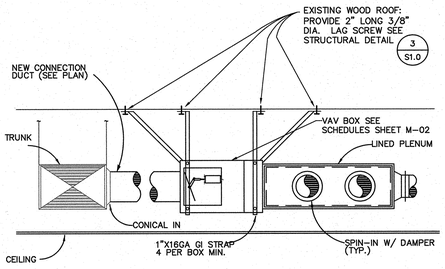

VAV BOX DETAIL

SCALE NONE | 11

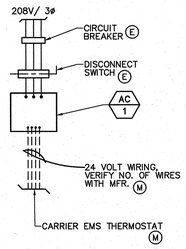

A/C CONTROL

SCALE NONE | 7

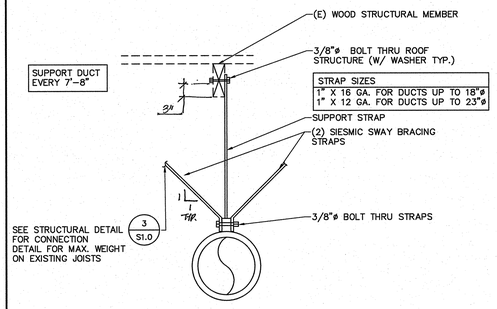

DUCT SUPPORT DETAIL – WOOD

SCALE NONE | 4

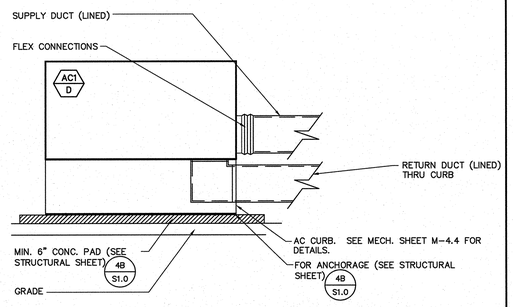

AC UNIT WITHOUT CURB MOUNTING DETAIL

SCALE NONE | 10

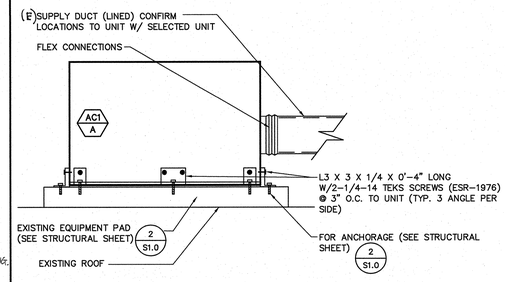

AC UNIT WITHOUT CURB MOUNTING DETAIL

SCALE NONE | 6

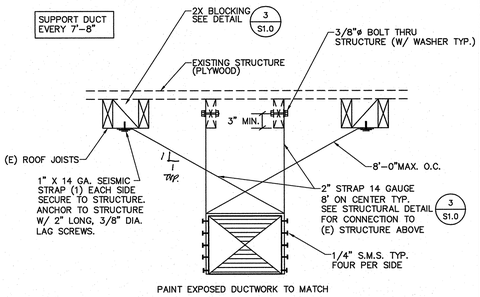

EXPOSED DUCT SUPPORT DETAIL – WOOD

SCALE NONE | 3

AC UNIT WITH DUCT THRU CURB MOUNTING DETAIL

SCALE NONE | 9

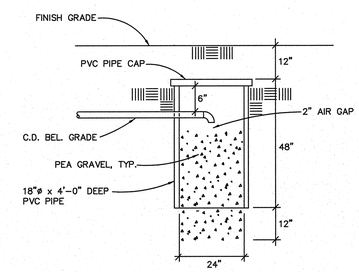

DRYWELL DETAIL

SCALE NONE | 5

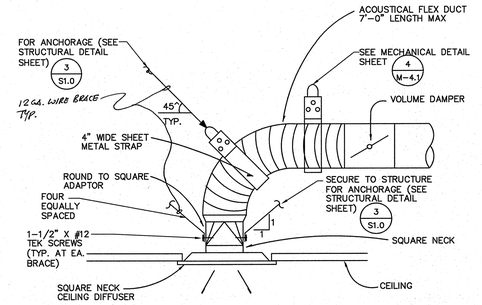

CEILING DIFFUSER DETAIL

SCALE NONE | 2

NOT USED

SCALE NONE | 12

NOT USED

SCALE NONE | 8

NOT USED

SCALE NONE

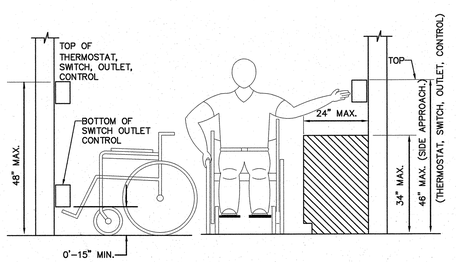

ADA CONTROL, DEVICE MOUNTING HEIGHT DETAIL

SCALE NONE | 1

ARCHITECTS
WLC
CLIENT FOCUSED • PASSION DRIVEN
SOUTHERN CALIFORNIA
8163 ROCHESTER AVENUE, SUITE 100
RANCHO CUCAMONGA
CALIFORNIA 91730-0729
TEL: 909-987-0909
www.wlcarchitects.com

LONGFELLOW ELEMENTARY SCHOOL HVAC REPLACEMENT

COMPTON UNIFIED SCHOOL DISTRICT
1101 S DWIGHT AVE.
COMPTON, CA 90220

LICENSED ARCHITECT MARK GRAHAM C-26046 03-31-19 STATE OF CALIFORNIA

REGISTERED PROFESSIONAL ENGINEER MARK BANERJEE No. M29253 Exp. 6/30/19 MECHANICAL STATE OF CALIFORNIA

CONSULTANT

IDENTIFICATION STAMP
DIV. OF THE STATE ARCHITECT
OFFICE OF REGULATION SERVICES
APPL 03-118423
AC FLS SS
DATE MAY 0 6 2019
FILE: 19-23

NO	DATE	BY	DESCRIPTION
1			REVISIONS

DRAWN: KC | CHECKED:
DATE: 3/6/2018 | SCALE:
PROJECT NUMBER: 570064

MECHANICAL DETAILS

DRAWING NUMBER: M-4.1

DETAIL-3

MAKE	MAKE	TYPE	SIZE	CURB WT
AC-1/G	CARRIER	48LCB	12A	220#

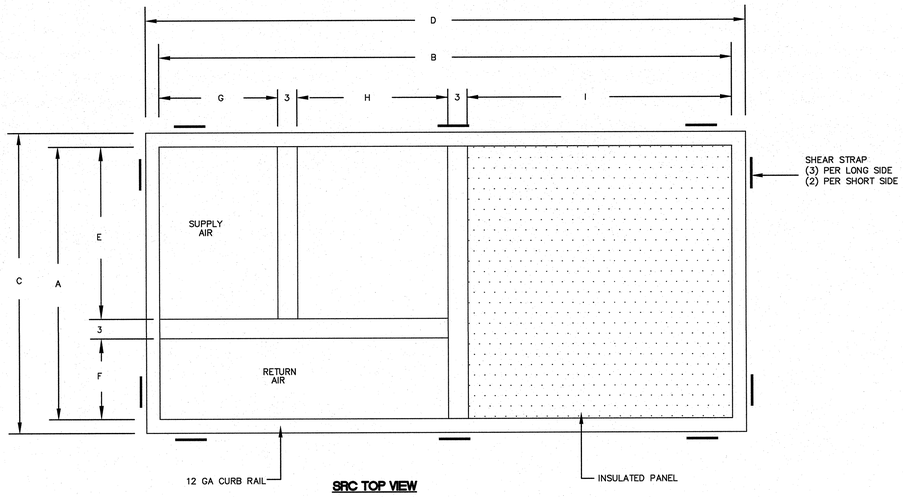

SRC TOP VIEW

A	B	C	D	E	F	G	H	I			
54-1/4	105-3/4	57-3/4	109-1/4	35-7/16	15-13/16	29-7/16	20-15/16	52-7/8			
						J	K	L	M	N	O
						60-1/16	111-3/4	3	3	109-3/4	58-1/16

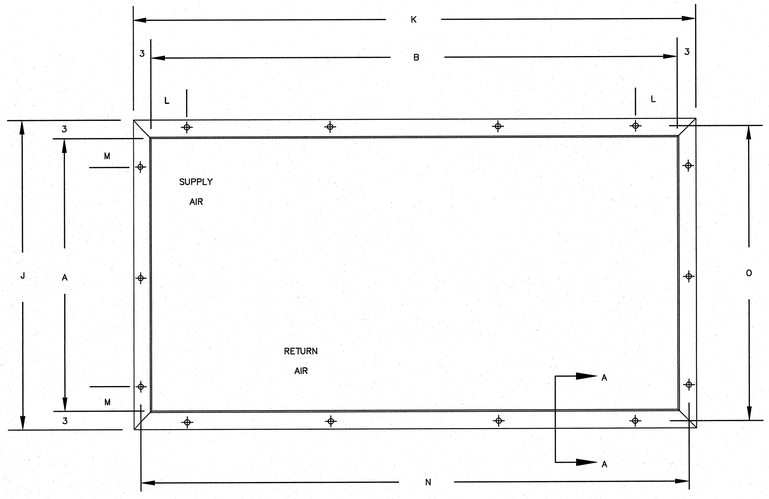

SRC FOOTPRINT

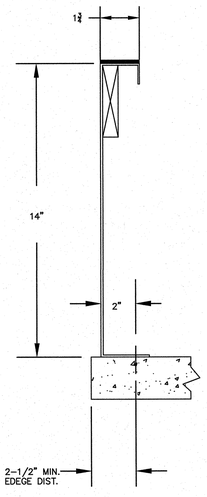

SECTION A-A

NOTES:

1. N & O DIMENSIONS ARE CENTERLINES OF ANCHOR HOLES IN CURB BOTTOM FLANGE.
2. DUCT SUPPORTS NOT SHOWN FOR CLARITY.
3. FOR ANCHORAGE, SEE STRUCTURAL DETAIL SHEET #4/S1.0.

TOP AND BOTTOM CURB DETAILS — SCALE NONE — 3

DETAIL-2

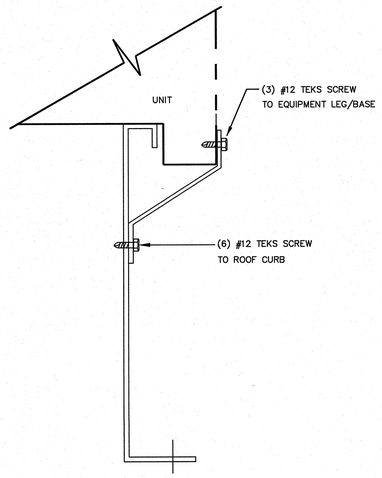

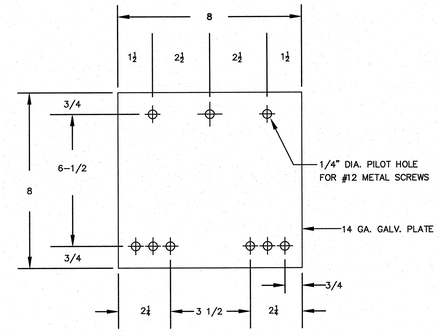

SEISMIC STRAP

ISOLATOR AND SEISMIC STRAP DETAIL — SCALE NONE — 2

DETAIL-1

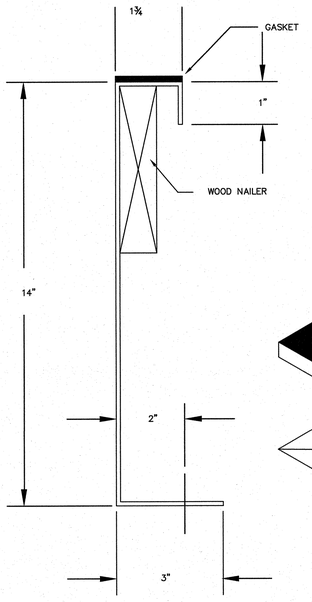

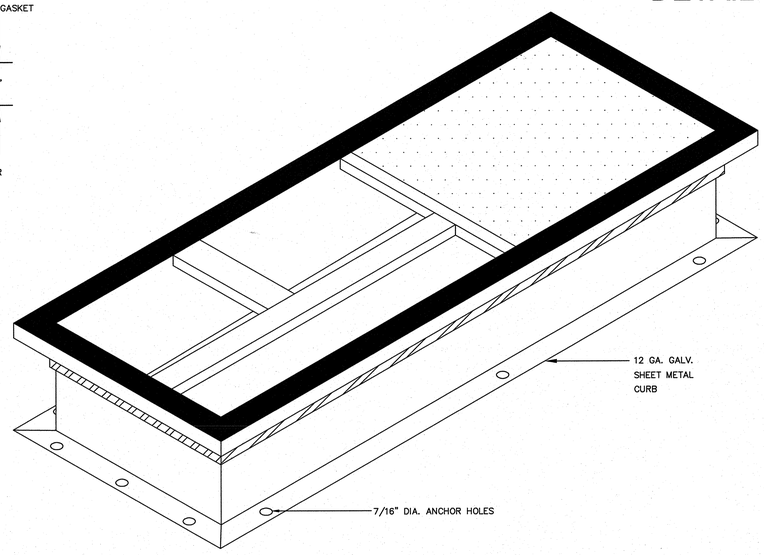

NOTES:

1. FOR ANCHOR REQUIREMENTS AND DETAILS OF ISOLATORS AND SEISMIC STRAPS, SEE DETAIL 2, 3.
2. SUBMITTED ROOF CURBS ARE LEVEL. PITCHED ROOF CURBS ARE AVAILABLE UPON REQUEST TO MATCH ROOF SLOPE.
3. NOT FOR CONSTRUCTION, ALL DIMENSIONS REQUIRE FINAL REVIEW AT COMMENCEMENT OF PROJECT

AC1/G UNITS ISO CURB MOUNTING EQUIPMENT PLATFORM DETAIL — SCALE NONE — 1

WLC ARCHITECTS
CLIENT FOCUSED • PASSION DRIVEN
SOUTHERN CALIFORNIA
8163 ROCHESTER AVENUE, SUITE 100
RANCHO CUCAMONGA
CALIFORNIA 91730-0729
TEL: 909-987-0909
www.wlcarchitects.com

LONGFELLOW ELEMENTARY SCHOOL
HVAC REPLACEMENT
COMPTON UNIFIED SCHOOL DISTRICT
1101 S DWIGHT AVE.
COMPTON, CA 90220

LICENSED ARCHITECT MARK GRAHAM C-26046 03-31-19 STATE OF CALIFORNIA

REGISTERED PROFESSIONAL ENGINEER ABBY BANERJEE No. M29253 Exp. 6/30/19 MECHANICAL STATE OF CALIFORNIA

CONSULTANT

IDENTIFICATION STAMP
DIV. OF THE STATE ARCHITECT
OFFICE OF REGULATION SERVICES
APPL 03-118423
AC — FLS — SS
DATE

FILE: 19-23

NO	DATE	BY	DESCRIPTION

REVISIONS

DRAWN: KC — CHECKED:
DATE: 3/6/2018 — SCALE:
PROJECT NUMBER: 570064

MECHANICAL DETAILS

DRAWING NUMBER: M-4.3

LONGFELLOW ELEMENTARY SCHOOL HVAC REPLACEMENT
COMPTON UNIFIED SCHOOL DISTRICT
1101 S DWIGHT AVE.
COMPTON, CA 90220

THIS APPLICATION DSA A#03-118423 SHALL NOT BE CLOSED WITH CERTIFICATION UNTIL DSA A#03-119653 IS CLOSED WITH CERTIFICATION.

GENERAL NOTES

1. THESE DRAWINGS DO NOT CONTAIN THE NECESSARY COMPONENTS FOR CONSTRUCTION SAFETY.

2. LOCATIONS OF ALL UTILITIES SHOWN ARE APPROXIMATE AND CONTRACTOR SHALL EXERCISE EXTREME CAUTION IN EXCAVATING AND TRENCHING ON THIS SITE TO AVOID INTERCEPTING EXISTING PIPING OR CONDUITS. IT SHALL BE THE RESPONSIBILITY OF THE CONTRACTOR TO LOCATE ALL EXISTING UTILITIES WHETHER SHOWN HEREON OR NOT AND TO PROTECT THEM FROM DAMAGE. THE ARCHITECT IS NOT RESPONSIBLE FOR THE LOCATION OF UNDERGROUND UTILITIES OR STRUCTURES WHETHER OR NOT SHOWN OR DETAILED AND INSTALLED BY ANY OTHER CONTRACT. THE CONTRACTOR SHALL IMMEDIATELY NOTIFY THE ARCHITECT SHOULD ANY UNIDENTIFIED CONDITIONS BE DISCOVERED. THE CONTRACTOR SHALL BEAR ALL EXPENSE OF REPAIR OR REPLACEMENT OF UTILITIES OR OTHER PROPERTY DAMAGED BY OPERATIONS IN CONJUNCTION WITH THE EXECUTION OF THIS WORK.

3. THESE DOCUMENTS AND THE IDEAS AND DESIGNS INCORPORATED HEREIN, AS AN INSTRUMENT OF PROFESSIONAL SERVICE, ARE THE PROPERTY OF WLC ARCHITECTS, INC., AND ARE NOT TO BE USED, IN WHOLE OR IN PART, FOR ANY OTHER PROJECT WITHOUT THE WRITTEN AUTHORIZATION OF WLC ARCHITECTS, INC.

4. THE WORK SHOWN ON THESE DRAWINGS AS EXISTING CONDITIONS WAS PREPARED FROM INFORMATION FURNISHED BY THE OWNER. WHILE THIS INFORMATION IS BELIEVED TO BE RELIABLE, WLC ARCHITECTS, INC. IS NOT RESPONSIBLE FOR THE ACCURACY OR ADEQUACY OF ANY WORK SHOWN AS EXISTING NOR IS WLC ARCHITECTS, INC. RESPONSIBLE FOR ANY ERRORS OR OMISSIONS WHICH MAY HAVE BEEN INCORPORATED INTO THESE DRAWINGS AS A RESULT.

5. EACH BIDDER SHALL POSSESS AT THE TIME OF BID A CLASS B OR THE APPROPRIATE CLASS C CONTRACTOR'S LICENSE PURSUANT TO PUBLIC CONTRACT CODE SECTION 3300 AND BUSINESS AND PROFESSIONS CODE SECTION 7028.15. THE SUCCESSFUL BIDDER MUST MAINTAIN THE LICENSE THROUGHOUT THE DURATION OF THIS CONTRACT.

6. FIRE SAFETY DURING CONSTRUCTION

   A. GENERAL: FIRE SAFETY DURING CONSTRUCTION SHALL COMPLY WITH CALIFORNIA FIRE CODE (CFC) CALIFORNIA CODE OF REGULATIONS (CCR) TITLE 24, PART 9, CHAPTER 5 AND CHAPTER 33.

   B. ACCESS ROADS: FIRE DEPARTMENT ACCESS ROADS SHALL BE ESTABLISHED AND MAINTAINED IN ACCORDANCE WITH CHAPTER 5, SECTION 501.4 AND CHAPTER 33, SECTION 3310.

   C. WATER SUPPLY: WATER MAINS AND HYDRANTS SHALL BE OPERATIONAL IN ACCORDANCE WITH CHAPTER 5, SECTION 501.4 AND CHAPTER 33,SECTION 3312.

   D. BUILDING ACCESS: ACCESS TO BUILDINGS FOR THE PURPOSE OF FIREFIGHTING SHALL BE PROVIDED. CONSTRUCTION MATERIAL SHALL NOT BLOCK ACCESS TO BUILDINGS, HYDRANTS OR FIRE APPLIANCES.

   E. ALTERATIONS OF BUILDINGS: SHALL COMPLY WITH APPLICABLE PROVISIONS OF CHAPTER 33.

   F. DEMOLITION OF BUILDINGS: SHALL COMPLY APPLICABLE PROVISIONS OF CHAPTER 33.

   G. FIRE WATCH: MAINTAIN FIRE WATCH WHEN REQUIRED BY THE BUILDING OFFICIAL AND WHEN EXISTING FIRE PROTECTION SYSTEMS ARE SHUT DOWN FOR ALTERATIONS IN ACCORDANCE WITH CHAPTER 33, SECTION 3304.5. FIRE WATCH SHALL REMAIN IN EFFECT UNTIL EXISTING FIRE PROTECTION SYSTEMS ARE RETURNED TO SERVICE OR AS ALLOWED BY THE BUILDING OFFICIAL.

7. PENETRATIONS TO FIRE RATED MATERIALS OR ASSEMBLIES SHALL BE RESTORED TO EQUAL RATING. FIRE STOP SYSTEMS AS LISTED BY UNDERWRITERS LABORATORIES SHALL BE INSTALLED PER FIRE RESISTANCE DIRECTORY. FIRE STOP SYSTEMS SHALL BE AS SPECIFIED.

8. NONRESIDENTIAL ENERGY STANDARDS COMPLIANCE STATEMENT (TITLE 24, PART 6):

   THE DESIGN INDICATED HEREIN COMPLIES WITH THE REQUIREMENTS OF THE ENERGY CONSERVATION STANDARDS OF TITLE 24, PART 6, CALIFORNIA CODE OF REGULATIONS. THE PROPOSED BUILDING(S) WILL BE IN COMPLIANCE WITH THE ENERGY CONSERVATION STANDARDS PROVIDED IT (THEY) IS (ARE) BUILT ACCORDING TO THESE DRAWINGS AND SPECIFICATIONS AND PROVIDED ANY FUTURE IMPROVEMENTS ARE COMPLETED ACCORDING TO THE REQUIREMENTS OF TITLE 24, PART 6, CALIFORNIA CODE OF REGULATIONS. THESE PLANS AND SPECIFICATIONS HAVE BEEN PREPARED TO INCLUDE ALL SIGNIFICANT ENERGY CONSERVATION FEATURES REQUIRED FOR COMPLIANCE WITH THE STANDARDS. BUILDING AREAS THAT ARE UNCONDITIONED AND/OR NOT SUBJECT TO THE STANDARDS ARE INDICATED ON THE PLANS.

8. (CONT) ENVELOPE MANDATORY MEASURES:

   A. INSTALLED INSULATING MATERIALS SHALL HAVE BEEN CERTIFIED BY THE MANUFACTURER TO COMPLY WITH THE CALIFORNIA QUALITY STANDARDS FOR INSULATING MATERIAL.

   B. ALL INSULATING MATERIALS SHALL BE INSTALLED IN COMPLIANCE WITH THE FLAME SPREAD RATING AND SMOKE DENSITY REQUIREMENTS OF TITLE 24, PART 2, CALIFORNIA CODE OF REGULATIONS, SECTIONS 720 AND 2603.

   C. ALL EXTERIOR JOINTS AND OPENINGS IN THE BUILDING ENVELOPE THAT ARE POTENTIAL AND OBSERVABLE SOURCES OF AIR LEAKAGE SHALL BE CAULKED, GASKETED, WEATHERSTRIPPED OR OTHERWISE SEALED.

   D. SITE CONSTRUCTED DOORS, WINDOWS, AND SKYLIGHTS SHALL BE CAULKED BETWEEN THE UNIT AND THE BUILDING, AND SHALL BE WEATHERSTRIPPED (EXCEPT FOR UNFRAMED GLASS DOORS AND FIRE DOORS).

   E. MANUFACTURED DOORS AND WINDOWS INSTALLED SHALL HAVE AIR INFILTRATION RATES CERTIFIED BY THE MANUFACTURER IN ACCORDANCE WITH TITLE 24, PART 6, CALIFORNIA CODE OF REGULATIONS, SECTION 110.6.

   F. MANUFACTURED FENESTRATION PRODUCTS IN THE ENVELOPE OF THE BUILDING, INCLUDING, BUT NOT LIMITED TO, WINDOWS, SLIDING GLASS DOORS, FRENCH DOORS, SKYLIGHTS, CURTAIN WALLS, AND GARDEN WINDOWS MUST BE LABELED FOR U-VALUE IN ACCORDANCE WITH THE (NFRC) NATIONAL FENESTRATION RATING COUNCIL'S INTERIM U-VALUE RATING PROCEDURE.

   G. DEMISING WALL INSULATION SHALL BE INSTALLED IN ALL OPAQUE PORTIONS OF FRAMED WALLS (EXCEPT DOORS).

9. PROOF LOAD TESTS FOR EXPANSION TYPE ANCHOR BOLTS:

   A. ANCHOR DIAMETER REFERS TO THE THREAD SIZE FOR THE WEDGE CATEGORY ANCHOR.

   B. APPLY PROOF TEST LOADS TO WEDGE ANCHORS WITHOUT REMOVING THE NUT IF POSSIBLE. IF NOT, REMOVE NUT AND INSTALL A THREADED COUPLER TO THE SAME TIGHTNESS OF THE ORIGINAL NUT USING A TORQUE WRENCH AND APPLY LOAD.

   C. REACTION LOADS FROM TEST FIXTURES MAY BE APPLIED CLOSE TO THE ANCHOR BEING TESTED, PROVIDED THE ANCHOR IS NOT RESTRAINED FROM WITHDRAWING BY THE FIXTURE(S).

   D. TEST EQUIPMENT IS TO BE CALIBRATED BY AN APPROVED TESTING LABORATORY IN ACCORDANCE WITH STANDARD RECOGNIZED PROCEDURES.

   E. THE FOLLOWING CRITERIA APPLY FOR THE ACCEPTANCE OF INSTALLED ANCHORS:

   1. HYDRAULIC RAM METHOD: THE ANCHOR SHOULD HAVE NO OBSERVABLE MOVEMENT AT THE APPLICABLE TEST LOAD. FOR WEDGE TYPE ANCHORS, A PRACTICAL WAY TO DETERMINE OBSERVABLE MOVEMENT IS THAT THE WASHER UNDER THE NUT BECOMES LOOSE. DROP IN ANCHORS ARE ONLY TO BE TESTED WITH THIS METHOD.

   2. TORQUE WRENCH METHOD: THE APPLICABLE TEST TORQUE MUST BE REACHED WITHIN THE FOLLOWING LIMITS FOR WEDGE ANCHORS: ONE-HALF (1/2) TURN OF THE NUT.

   3. IF MANUFACTURERS TORQUE IS LESS THAN SPECIFIED TEST TORQUE THE MANUFACTURERS LISTED TORQUE SHALL BE USED FOR TESTING.

   H. TESTING SHOULD OCCUR 24 HOURS MINIMUM AFTER INSTALLATION OF THE SUBJECT ANCHORS

   I. ALL EXPANSION TYPE ANCHOR BOLTS USED FOR STRUCTURAL APPLICATIONS SHALL BE TESTED. ALL ANCHOR BOLTS OF THE EXPANSION TYPE USED FOR NON STRUCTURAL APPLICATIONS (LOADED IN EITHER PULLOUT OR SHEAR) SHALL HAVE 50 PERCENT OF THE BOLTS (ALTERNATE BOLTS IN ANY GROUP ARRANGEMENT ALLOWED BY THE TYPE OF SUBSTRATE AND DIAMETER OF BOLT LISTED BELOW UNDER TEST VALUES TABLE) PROOF TESTED IN TENSION TO TWICE THE ALLOWABLE TENSION LOAD. IF THERE ARE ANY FAILURES, THE IMMEDIATELY ADJACENT BOLTS MUST THEN ALSO BE TESTED. TESTING SHALL BE PERFORMED IN ACCORDANCE WITH TITLE 24, PART 2, SECTION 1910A.5

   J. ALL BOLTS MUST HAVE ICC/ES APPROVAL.

   A. ALL ANCHOR BOLTS OF THE EXPANSION TYPE INSTALLED IN CONCRETE SHALL BE ONE OF THE FOLLOWING:

   1. ITW RAMSET/REDHEAD-WEDGE ANCHOR-ICC/ES NO. 2427
   2. HILTI, INC.- QWIK BOLT TZ -WEDGE ANCHOR-ICC/ES NO. 1917
   3. SIMPSON - STRONGBOLT 2 - WEDGE ANCHOR - ICC/ES NO. 3037

MIMIMUM TEST VALUES
NORMALWEIGHT OR LIGHTWEIGHT CONCRETE

ANCHOR		WEDGE		---		
DIA. (IN)	TENSION LOAD (LBS)	TORQUE (FT-LBS)	EMBED MENT (IN)	---	---	---
---	---	---	---	---	---	---
3/8	1,100	25	2	---	---	---
1/2	2,000	50	3-1/4	---	---	---
5/8	2,300	80	4-1/4	---	---	---
3/4	3,700	150	4-3/4	---	---	---

   B. ALL ANCHOR BOLTS OF THE EXPANSION TYPE INSTALLED IN GROUT FILLED MASONRY SHALL BE ONE OF THE FOLLOWING:

   1. HILTI, INC.-KWIK BOLT III-WEDGE ANCHOR-ICC/ES NO. 1385
   2. SIMPSON-STRONGBOLT 2-WEDGE ANCHOR-IAMPO NO. ER-240

MIMIMUM TEST VALUES
GROUT FILLED CONCRETE MASONRY

ANCHOR		WEDGE		---		
DIA. (IN)	TENSION LOAD (LBS)	TORQUE (FT-LBS)	EMBED MENT (IN)	---	---	---
1/4	1,080	4	2	---	---	---
3/8	1,564	15	2-1/2	---	---	---
1/2	1,810	25	3-1/2	---	---	---
5/8	2,484	65	4	---	---	---
3/4	3,290	120	4-3/8	---	---	---

11. POWDER DRIVEN CONCRETE FASTENERS:

   A. GENERAL: USE OF POWDER DRIVEN CONCRETE FASTENERS FOR TENSION LOADS IS LIMITED TO SUPPORT OF MINOR LOADS LIKE ACOUSTICAL CEILINGS, DUCT WORK, CONDUIT.

   B. ALLOWABLE LOADS: IN GENERAL, LOADS SHOULD BE LIMITED TO LESS THAN 100 POUNDS. HOWEVER, GREATER LOADS MAY BE PERMITTED FOR SPECIAL CASES WHEN APPROVED BY THE CHECKING SUPERVISOR OR FIELD ENGINEER.

   C. TESTING: THE OPERATOR, TOOL, AND FASTENER SHALL BE PREQUALIFIED BY THE PROJECT INSPECTOR. HE SHALL OBSERVE THE TESTING OF THE FIRST 10 FASTENER INSTALLATIONS. A TEST "PULL-OUT" LOAD OF NOT LESS THAN TWICE THE DESIGN LOAD, OR 200 POUNDS, WHICHEVER IS GREATER SHALL BE APPLIED TO THE PIN IN SUCH A MANNER AS NOT TO RESIST THE SPALLING TENDENCY OF THE CONCRETE AROUND THE PIN. THEREAFTER, RANDOM TESTS UNDER THE PROJECT INSPECTOR'S SUPERVISION SHALL BE MADE OF APPROXIMATELY 1 IN 10 PINS, EXCEPT THAT WHEN THE DESIGN LOAD EXCEEDS 100 POUNDS, ONE HALF OF THE PINS SHALL BE TESTED. SHOULD FAILURE OCCUR ON ANY PIN TESTED, ALL INSTALLATIONS MUST BE TESTED AND UNFAIR PINS REPLACED.

   D. ALL POWDER DRIVEN CONCRETE FASTENERS SHALL BE ONE OF THE FOLLOWING:

   1. HILTI, INC.
      X-CP 72 PINS - WOOD PLATE - ICC/ES NO. 2379
      X-U PINS - STEEL TRACK - ICC/ES NO. 2269
   2.. ITW RAMSET/REDHEAD
      DRIVE PIN - WOOD PLATE - ICC/ES NO. 2690
      DRIVE PIN - STEEL TRACK - ICC/ES NO. 1799
   3. SIMPSON STRONG-TIE CO., INC.
      PDPWL-300MG - WOOD PLATE - ICC/ES NO. 2138
      PDPA-125- STEEL TRACK - ICC/ES NO. 2138

I find that: ☒ All drawings or sheets listed on the cover or index sheet ☐ This drawing or page

☒ is/are in general conformance with the project design intent, and
☒ has/have been coordinated with the project plans and specifications.

Mark Graham 03/06/18
Signature Date
Architect or Engineer designated to be in general responsible charge
MARK GRAHAM
Print Name
C-26046 03/31/18
License Number Expiration Date

☐ is/are in general conformance with the project design intent, and
☐ has/have been coordinated with the project plans and specifications.

Signature Date
Architect or Engineer delegated responsibility for this portion of the work
Print Name
License Number Expiration Date

12. INSPECTOR OF RECORD REQUIREMENTS

   A. ONE OR MORE INSPECTORS EMPLOYED BY THE OWNER IN ACCORDANCE WITH THE REQUIREMENTS OF TITLE 24 OF THE CALIFORNIA CODE OF REGULATIONS WILL BE ASSIGNED TO THE WORK. THE INSPECTORS DUTIES ARE SPECIFICALLY DEFINED IN SECTION 4-342 OF SAID TITLE 24, PART 1 AND IN ADDITION SHALL BE AS STIPULATED IN INTERPRETATION OF REGULATION DOCUMENT IR A-8.

   B. INSPECTOR SHALL BE CERTIFIED AS A CLASS 3 INSPECTOR THROUGH THE DIVISION OF THE STATE ARCHITECT INSPECTOR EXAMINATION PROGRAM. INSPECTOR SHALL ALSO BE SPECIFICALLY APPROVED BY THE DIVISION OF THE STATE ARCHITECT FOR THIS PROJECT AT LEAST 10 DAYS PRIOR TO THE START OF ANY WORK FOR THIS PROJECT.

14. ALL WORK SHOWN ON THESE DRAWINGS SHALL COMPLY WITH THE REQUIREMENTS OF TITLE 24, CALIFORNIA CODE OF REGULATIONS (CCR).

15. CHANGES TO THE APPROVED DRAWINGS AND SPECIFICATIONS SHALL BE MADE BY AN ADDENDUM OR A CONSTRUCTION CHANGE DOCUMENT APPROVED BY THE DIVISION OF THE STATE ARCHITECT, AS REQUIRED BY TITLE 24, CCR, PART 1, SECTION 4-338.

16. THE INTENT OF THESE DRAWINGS AND SPECIFICATIONS IS THAT THE WORK OF THE ADDITION, ALTERATION OR RECONSTRUCTION IS IN COMPLIANCE WITH THE REQUIREMENTS OF TITLE 24, CALIFORNIA CODE OF REGULATIONS. SHOULD ANY CONDITIONS SUCH AS DETERIORATION OR NON-COMPLYING CONSTRUCTION BE DISCOVERED WHICH IS NOT IDENTIFIED BY THE CONTRACT DOCUMENTS WHEREIN THE FINAL WORK WOULD NOT COMPLY WITH THE REQUIREMENTS OF TITLE 24, CALIFORNIA CODE OF REGULATIONS, THE CONTRACTOR SHALL IMMEDIATELY NOTIFY THE OWNER AND THE ARCHITECT OF THE CONDITION IN WRITING. NECESSARY INFORMATION REQUIRED TO CORRECT THE CONDITIONS ENCOUNTERED WILL BE ISSUED BY THE ARCHITECT. A CHANGE ORDER MAY BE ISSUED TO ADJUST THE CONTRACT SUM OR TIME COMMENSURATE WITH THE AMOUNT OF ADDITIONAL WORK REQUIRED IF ANY. A CONSTRUCTION CHANGE DOCUMENT SHALL BE APPROVED BY THE DIVISION OF THE STATE ARCHITECT PRIOR TO PROCEEDING WITH THE WORK REQUIRED BY THE CHANGE ORDER.

17. DSA ACCEPTED TESTING LABORATORY DIRECTLY EMPLOYED BY THE DISTRICT (OWNER) SHALL CONDUCT ALL REQUIRED TEST AND INSPECTIONS FOR THE PROJECT.

PROJECT TEAM

PROJECT ADDRESS
LONGFELLOW ELEMENTARY SCHOOL
1101 S. DWIGHT STREET
COMPTON, CA 90220
PHONE: 310-898-6460

OWNER
COMPTON UNIFIED SCHOOL DISTRICT
501 S SANTA FE AVENUE
COMPTON, CA 90221
PHONE: 310-604-6507 FAX: 310-763-0105

ARCHITECT
WLC ARCHITECTS, INC.
8163 ROCHESTER AVENUE., SUITE 100
RANCHO CUCAMONGA, CA 91730
PHONE: 909-987-0909 FAX: 909-980-9980

MECHANICAL ENGINEER
OED
5200 E LA PALMA AVE
ANAHEIM, CA 92807
PHONE: 714-693-2277

ELECTRICAL ENGINEER
A&F ENGINEERING GROUP, INC.
9320 BASELINE RD., SUITE C
RANCHO CUCAMONGA, CA 91701
PHONE: 909-941-3008 FAX: 909-941-8211

SCOPE OF WORK DESCRIPTION

THE SCOPE OF THE WORK AS STATED BELOW IS FOR DSA PLAN REVIEW PURPOSES ONLY AND DOES NOT CONSTITUTE A DETAILED AND FULL EXPLANATION OF THE REQUIREMENTS OF THE CONTRACT DOCUMENTS.

REPLACE (1) EXISTING ROOF MOUNTED HVAC UNIT AT ADMINISTRATION BUILDING A AND (5) EXISTING FLOOR MOUNTED HVAC UNITS AT CLASSROOM BUILDINGS C, D, F, G AND K WITH NEW PACKAGE HVAC UNITS, AND MODIFY (1) EXISTING FLOOR MOUNTED HVAC UNIT AT CLASSROOM BUILDING E AND SITE WORKS.

VICINITY MAP

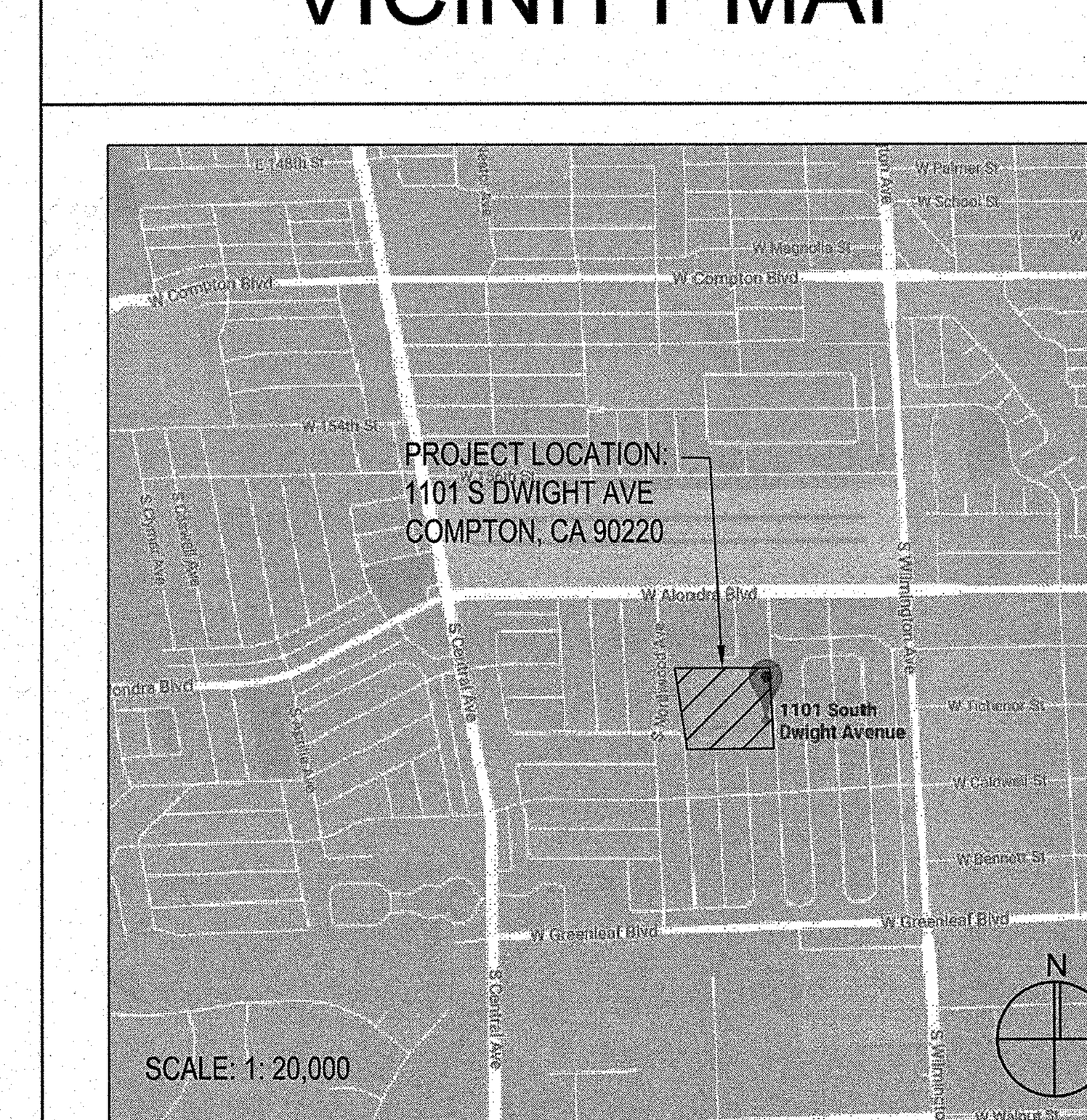

SHEET INDEX

DRAWING REF NO	DESCRIPTION
ARCHITECTURAL	
A0.1	GENERAL NOTE AND PROJECT DIRECTORY
A0.2	ARCHITECTURAL DRAWINGS ABBREVIATIONS AND GOVERNING CODE
A1.0	SITE PLAN AND BUILDING A DEMO AND NEW ROOF PLANS
A2.1	BUILDING C AND D ENLARGED DEMO AND NEW FLOOR PLANS
A2.2	BUILDING F AND G ENLARGED DEMO AND NEW FLOOR PLANS
A2.3	BUILDING K ENLARGED DEMO AND NEW FLOOR PLANS AND DETAILS
A3.1	BUILDING K ENLARGED DEMO AND NEW REFLECTED CEILING PLANS
STRUCTURAL	
S1.0	GENERAL NOTE AND DETAILS
S1.1	DETAILS
S1.2	DETAILS
S2.1	BUILDING C, D, E, F, G AND K PARTIAL FLOOR PLANS
MECHANICAL	
M-0.1	MECHANICAL GENERAL NOTE AND LEGEND
M-0.2	MECHANICAL SCHEDULES
M-2.0	BUILDING A DEMOLITION AND REMODEL FLOOR PLANS
M-2.1	BUILDING C DEMOLITION AND REMODEL FLOOR PLANS
M-2.2	BUILDING D DEMOLITION AND REMODEL FLOOR PLANS
M-2.3	BUILDING E DEMOLITION AND REMODEL FLOOR PLANS
M-2.4	BUILDING F DEMOLITION AND REMODEL FLOOR PLANS
M-2.5	BUILDING G DEMOLITION AND REMODEL FLOOR PLANS
M-2.6	BUILDING K DEMOLITION AND REMODEL FLOOR PLANS
M-3.1	MECHANICAL SECTIONS
M-4.1	MECHANICAL DETAILS
M-4.3	MECHANICAL DETAILS
M-4.4	MECHANICAL DETAILS
M-5.1	WIRING DIAGRAM DETAILS
M-5.2	WIRING DIAGRAM DETAILS
M-5.3	WIRING DIAGRAM DETAILS
M-5.4	WIRING DIAGRAM DETAILS
M-5.5	WIRING DIAGRAM DETAILS
M-6.0	TITLE 24 BUILDING A
M-6.1	TITLE 24 BUILDING C
M-6.2	TITLE 24 BUILDING D
M-6.3	TITLE 24 BUILDING E
M-6.4	TITLE 24 BUILDING F
M-6.5	TITLE 24 BUILDING G
M-6.6	TITLE 24 BUILDING K
ELECTRICAL	
E0.1	GENERAL NOTES SYMBOL LIST & DETAILS
E0.2	DEMOLITION AND REMODEL SINGLE LINE DIAGRAM
E0.3	PANEL SCHEDULES
E1.0	SITE PLAN
E2.1	BUILDING C DEMOLITION AND REMODEL PLANS
E2.2	BUILDING D DEMOLITION AND REMODEL PLANS
E2.3	BUILDING E DEMOLITION AND REMODEL PLANS
E2.4	BUILDING F DEMOLITION AND REMODEL PLANS
E2.5	BUILDING G DEMOLITION AND REMODEL PLANS
E2.6	BUILDING K DEMOLITION AND REMODEL PLANS

ARCHITECTS WLC
CLIENT FOCUSED PASSION DRIVEN
SOUTHERN CALIFORNIA
8163 ROCHESTER AVENUE, SUITE 100
RANCHO CUCAMONGA
CALIFORNIA 91730-0729
TEL: 909-987-0909
www.wlcarchitects.com

LONGFELLOW ELEMENTARY SCHOOL
HVAC REPLACEMENT
COMPTON UNIFIED SCHOOL DISTRICT
1101 S DWIGHT AVE.
COMPTON, CA 90220

LICENSED ARCHITECT MARK GRAHAM C-26046 03-31-19 STATE OF CALIFORNIA

CONSULTANT

IDENTIFICATION STAMP
DIV. OF THE STATE ARCHITECT
OFFICE OF REGULATION SERVICES
APPL 03-118423
AC — FLS SS EY
DATE MAR 0 8 2018
FILE: 19-23
46 SHEETS TOTAL + DSA 103 + SPECS

NO	DATE	BY	DESCRIPTION
#	REVISIONS		

DRAWN:	CHECKED:
DATE: 3/6/2018	SCALE:
PROJECT NUMBER: 1723400	

GENERAL NOTES & PROJECT DIRECTORY

DRAWING NUMBER: A0.1

ARCHITECTURAL DRAWING ABBREVIATIONS

SYMBOLS

&	AND
∠	ANGLE
@	AT
CL	CENTERLINE
⊏	CHANNEL
ø	DIAMETER OR ROUND
(E)	EXISTING
(N)	NEW
d	PENNY (NAILS)
⊥	PERPENDICULAR
PL	PLATE
#	POUND OR NUMBER

A/C	AIR CONDITIONING
A/E	ARCHITECT/ENGINEER
AB	ANCHOR BOLT
ABAN	ABANDON
ABC	AGGREGATE BASE COURSE
ABV	ABOVE
AC	ASPHALTIC CONCRETE
ACC	ACCESS(IBLE)
ACST	ACOUSTICAL
ACT	ACOUSTICAL CEILING TILE
AD	AREA DRAIN
ADDM	ADDENDUM
ADH	ADHESIVE
ADJ	ADJUSTABLE
ADJC	ADJACENT
AFF	ABOVE FINISHED FLOOR
AFG	ABOVE FINISHED GRADE
AGGR	AGGREGATE
AHU	AIR HANDLING UNIT
AL	ALUMINUM
ALT	ALTERNATE
ANC	ANCHOR, ANCHORAGE
APLD	APPLIED
APPRX	APPROXIMATE
ARCH	ARCHITECT(URAL)
ASC	ABOVE SUSPENDED CEILING
ASPH	ASPHALT
ASSY	ASSEMBLY
ASYM	ASYMMETRICAL
AWG	AMERICAN WIRE GAGE

BC	BACK OF CURB
BD	BOARD
BITUM	BITUMINOUS
BLDG	BUILDING
BLK	BLOCK
BLKG	BLOCKING
BLW CLG	BELOW CEILING
BLW FFLR	BELOW FINISH FLOOR
BLW	BELOW
BM	BENCH MARK
BN	BOUNDARY NAILING
BOT	BOTTOM
BRCG	BRACING
BRDG	BRIDGING
BRG	BEARING
BRK	BRICK
BRKT	BRACKET
BRS	BRASS
BRZ	BRONZE
BS	BOTH SIDES
BSMT	BASEMENT
BTWN	BETWEEN
BUR	BUILT UP ROOFING
BW	BOTH WAYS

C&G	CURB AND GUTTER
CAB	CABINET
CAD	CADMIUM
CB	CATCH BASIN
CBB	CEMENTITIOUS BACKER BOARD
CEM	CEMENT
CER	CERAMIC
CFCI	CONTRACTOR FURNISH CONTRACTOR INSTALLED
CFLG	COUNTERFLASHING
CFOI	CONTRACTOR FURNISH OWNER INSTALLED
CG	CORNER GUARD
CHBD	CHALKBOARD
CHFR	CHAMFER
CI	CAST IRON
CIR	CIRCLE
CIRC	CIRCULAR, CIRCUMFERENCE
CJ	CONSTRUCTION JOINT
CL	CHAIN LINK
CLG	CEILING
CLJ	CONTROL JOINT
CLL	CONTRACT LIMIT LINE
CLOS	CLOSURE
CLR	CLEAR(ANCE)
CLRM	CLASSROOM
CMPST	COMPOSITION
CMU	CONCRETE MASONRY UNIT
CNCL	CONCEALED
CNR	CORNER
CNTR	COUNTER
COL	COLUMN
COM	COMMON
COMB	COMBINATION
COMPT	COMPARTMENT
CONC	CONCRETE
CONF	CONFERENCE
CONN	CONNECTION
CONSTR	CONSTRUCTION
CONT	CONTINUOUS (ATION)
CONTR	CONTRACT(OR)
COORD	COORDINATE
CORR	CORRIDOR
CPR	COPPER
CPRS	COMPRESS(ED), (ION), (IBLE)
CPT	CARPET(ED)
CRS	COLD ROLLED STEEL
CS	CAST STONE
CSG	CASING
CSK	COUNTERSUNK
CSMT	CASEMENT
CSWK	CASEWORK
CT	CERAMIC TILE
CTB	CERAMIC TILE BASE
CTF	CERAMIC TILE FLOOR
CTG	COATING
CTR	CENTER

CUFT	CUBIC FOOT
CUIN	CUBIC INCH
CUST	CUSTODIAN
CUYD	CUBIC YARD

D	DRAIN
DA	DOUBLEACTING
DBL	DOUBLE
DEMO	DEMOLISH, DEMOLITION
DEP	DEPRESSED
DEPT	DEPARTMENT
DET	DETAIL
DF	DRINKING FOUNTAIN
DH	DOUBLE HUNG
DIA	DIAMETER
DIAG	DIAGONAL
DIFF	DIFFUSER
DIM	DIMENSION
DISP	DISPENSER
DIV	DIVISION
DMPF	DAMPPROOFING
DMT	DEMOUNTABLE
DN	DOWN
DR	DOOR
DRB	DRAINBOARD
DRLV	DOOR LOUVER
DS	DOWNSPOUT
DSP	DRY STANDPIPE
DT	DRAIN TILE
DVTL	DOVETAIL
DW	DISHWASHER
DWG	DRAWING
DWL	DOWEL
DWR	DRAWER

E	EAST
EA	EACH
EAR	EXHAUST AIR REGISTER
EB	EXPANSION BOLT
EE	EACH END
EF	EACH FACE
EFS	EXTERIOR FINISH SYSTEM
EHD	ELECTRIC HAND DRYER
EIFS	EXTERIOR INSULATION AND FINISH SYSTEM
EJ	EXPANSION JOINT
EL	ELEVATION
ELAST	ELASTOMERIC
ELEC	ELECTRIC(AL)
ELEV	ELEVATOR
EM	EXPANDED METAL
EMER	EMER EMERGENCY
EN	EDGE NAILING
ENCL	ENCLOSE(URE)
ENGR	ENGINEER
ENTR	ENTRANCE
EP	ELECTRICAL PANELBOARD
EQ	EQUAL
EQUIP	EQUIPMENT
ESC	ESCUTCHEON
ESCL	ESCALATOR
ESMT	EASEMENT
EW	EACH WAY
EWC	ELECTRIC WATER COOLER
EWH	ELECTRICAL WATER HEATER
EWS	EYE WASH STATION
EXC	EXCAVATE
EXG	EXISTING
EXH	EXHAUST
EXP	EXPOSED
EXPN	EXPANSION
EXS	EXTRA STRONG
EXT	EXTERIOR

F/F	FACE TO FACE
FA	FIRE ALARM
FAB	FABRIC
FBD	FIBERBOARD
FBRK	FIRE BRICK
FCBRK	FACE BRICK
FD	FLOOR DRAIN
FDTN	FOUNDATION
FE	FIRE EXTINGUISHER
FEC	FIRE EXTINGUISHER CABINET
FFA	FROM FLOOR ABOVE
FFB	FROM FLOOR BELOW
FFEL	FINISHED FLOOR ELEVATION
FFL	FINISHED FLOOR LINE
FGL	FIBERGLASS
FHC	FIRE HOSE CABINET
FHMS	FLATHEAD MACHINE SCREW
FHWS	FLATHEAD WOOD SCREW
FIN	FINISH(ED)
FJT	FLUSH JOINT
FLASH	FLASH(ING)
FLDG	FOLDING
FLG	FLOORING
FLR	FLOOR
FLUOR	FLUORESCENT
FN	FIELD NAILING
FOC	FACE OF CONCRETE
FOF	FACE OF FINISH
FOG	FACE OF GRID
FOM	FACE OF MASONRY
FOS	FACE OF STUDS
FPL	FIREPLACE
FPRF	FIREPROOF(ING)
FR	FRAME(D), (ING)
FRG	FIBER REINFORCED GYPSUM
FRGL	FIRE RESISTIVE GLAZING
FRP	FIBERGLASS REINFORCED PLASTIC
FRTD	FIRE RATED
FRTW	FIRE RETARDANT TREATED WOOD
FRZ	FREEZER
FS	FAR SIDE
FSTN	FASTEN, FASTENER
FT	FOOT OR FEET
FTG	FOOTING
FURG	FURRED (ING)
FUT	FUTURE
FWC	FABRIC WALL COVERING

GA	GAGE
GAL	GALLON
GALV	GALVANIZED
GB	GRAB BAR
GFRC	GLASS FIBER REINFORCED CONCRETE
GI	GALVANIZED IRON
GL	GLASS
GLU LAM	GLUE LAMINATED
GLZ	GLAZING
GLZCMU	GLAZED CONCRETE MASONRY UNITS
GND	GROUND
GPC	GYPSUM PLASTER CEILING
GR LN	GRADE LINE
GR BM	GRADE BEAM
GR	GRADE, (ING)
GRBD	GARBAGE DISPOSER
GSB	GYPSUM SHEATHING BOARD
GSS	GALVANIZED STEEL SHEET
GST	GLAZED STRUCTURAL TILE
GT	GROUT
GVL	GRAVEL
GYP	GYPSUM

HB	HOSE BIBB
HC	HOLLOW CORE
HD	HEAVY DUTY
HD JT	HEAD JOINT
HDAS	HEADED ANCHOR STUD
HDR	HEADER
HDW	HARDWARE
HDWD	HARDWOOD
HEX	HEXAGONAL
HGR	HANGER
HLDN	HOLD DOWN
HM	HOLLOW METAL
HMD	HOLLOW METAL DOOR
HMDF	HOLLOW METAL DOOR AND FRAME
HMF	HOLLOW METAL FRAME
HNDRL	HANDRAIL
HORIZ	HORIZONTAL
HPT	HIGH POINT
HR	HOUR
HT	HEIGHT
HTG	HEATING
HVAC	HEATING/VENTILATING/ AIR CONDITIONING
HWH	HOT WATER HEATER

ID	INSIDE DIAMETER
INCL	INCLUDE(D), (ING)
INSTL	INSTALL
INSUL	INSULATE(D), (ION)
INT	INTERIOR
INV	INVERT
IPS	IRON PIPE SIZE

JAN	JANITOR
JST	JOIST
JT	JOINT

KIT	KITCHEN
KO	KNOCKOUT
KPL	KICKPLATE

LAB	LABORATORY
LAD	LADDER
LAM	LAMINATE(D)
LAV	LAVATORY
LBL	LABEL
LBR	LUMBER
LBS	POUND
LCT	LINOLEUM COMPSITE TILE
LDR	LEADER
LG	LENGTH
LH	LEFT HAND
LHR	LEFT HAND REVERSE
LKNT	LOCKNUT
LKR	LOCKER
LKWASH	LOCKWASHER
LLH	LONG LEG HORIZONTAL
LLV	LONG LEG VERTICAL
LMST	LIMESTONE
LNDSCP	LANDSCAPE(D)
LNTL	LINTEL
LP	LIGHTPROOF
LPT	LOW POINT
LT	LIGHT
LTWT	LIGHT WEIGHT
LVL	LEVEL(ER)
LVR	LOUVER
LW	LIGHTWEIGHT CONCRETE
LWIC	LIGHTWEIGHT INSULATING CONCRETE

MAINT	MAINTAIN(ANCE)
MAS	MASONRY
MATL	MATERIAL
MAX	MAXIMUM
MB	MACHINE BOLT
MBR	MEMBER
MC	MEDICINE CABINET
MCB	METAL CORNER BEAD
MDO	MEDIUM DENSITY OVERLAID
MECH	MECHANICAL
MED	MEDIUM
MEMB	MEMBRANE
MEZZ	MEZZANINE
MFD	METAL FLOOR DECKING
MFR	MANUFACTURE(ER)
MH	MANHOLE
MIN	MINIMUM
MIRR	MIRROR
MISC	MISCELLANEOUS
ML	METAL LATH
MLDG	MOLDING
MLWK	MILLWORK
MO	MASONRY OPENING
MOD	MODULE (AR)
MR	MOISTURE RESISTANT
MRB	MARBLE
MRD	METAL ROOF DECKING
MS	MACHINE SCREW
MTD	MOUNTED
MTL	METAL

MTR	MORTAR
MULL	MULLION
MVBL	MOVABLE
MWP	MEMBRANE WATER PROOFING
N	NORTH
NA	NOT APPLICABLE
NAT	NATURAL
NCOMBL	NONCOMBUSTIBLE
NE	NOT EXCEEDING
NF	NEAR FACE
NIC	NOT IN CONTRACT
NLB	NON-LOAD BEARING
NM	NONMETALLIC
NO	NUMBER
NOM	NOMINAL
NR	NOISE REDUCTION
NRC	NOISE REDUCTION COEFFICIENT
NRCA	NATIONAL ROOFING CONTRACTORS ASSOCIATION
NS	NEAR SIDE
NTS	NOT TO SCALE

O/O	OUT TO OUT
OA	OVERALL
OBS	OBSCURE
OC	ON CENTER(S)
OD	OUTSIDE DIAMETER
OFCI	OWNER FURNISHED - CONTRACTOR INSTALLED
OFF	OFFICE
OFOI	OWNER FURNISHED - OWNER INSTALLED
OFS	OUTSIDE FACE OF STUD
OHMS	OVALHEAD MACHINE SCREW
OHWS	OVALHEAD WOOD SCREW
OPH	OPPOSITE HAND
OPNG	OPENING
OPP	OPPOSITE
OPQ	OPAQUE
OPR	OPERABLE
ORD	OVERFLOW ROOF DRAIN
OVFL	OVERFLOW
OVHD	OVERHEAD

PAR	PARALLEL
PAT	PATTERN
PB	PANIC BAR
PBD	PARTICLE BOARD
PC	PORTLAND CEMENT
PCC	PRECAST CONCRETE
PCP	PORTLAND CEMENT PLASTER
PED	PEDESTAL
PERF	PERFORATE(D)
PERIM	PERIMETER
PERP	PERPENDICULAR
PGBD	PEGBOARD
PH	PHASE
PHS	PHILLIPS HEAD SCREW
PI	POINT OF INTERSECTION
PIV	POST INDICATOR VALVE
PL	PROPERTY LINE
PLAM	PLASTIC LAMINATE
PLAS	PLASTER
PLBG	PLUMBING
PLYWD	PLYWOOD
PNEU	PNEUMATIC
PNL	PANEL
PNT	PAINT(ED)
POL	POLISHED
POLY	POLYETHYLENE
PORC	PORCELAIN
PORT	PORTABLE
PR	PAIR
PRCST	PRECAST
PREFAB	PREFABRICATE(D)
PREFIN	PREFINISHED
PREFMD	PREFORMED
PRKG	PARKING
PRML	PREMOLDED
PROJ	PROJECT
PROP	PROPERTY
PSCONC	PRESTRESSED CONCRETE
PT	POINT
PTCONC	POST TENSIONED CONCRETE
PTD	PAPER TOWEL DISPENSER
PTN	PARTITION
PTR	PAPER TOWEL RECEPTOR
PVC	POLYVINYL CHLORIDE
PVG	PAVE(D), (ING)
PVMT	PAVEMENT

QT	QUARRY TILE
QTB	QUARRY TILE BASE
QTF	QUARRY TILE FLOOR
QTR	QUARTER
QTY	QUANTITY

R	RISER
RA	RETURN AIR
RAB	RABBET
RAD	RADIUS
RB	RESILIENT BASE
RBR	RUBBER
RCP	REINFORCED CONCRETE PIPE
RCVR	RECEIVER
RD	ROOF DRAIN
RDGINS	RIGID INSULATION
RDWY	ROADWAY
REBAR	REINFORCING STEEL BARS
REC	RECESSED
RECT	RETANGULAR
REF	REFERENCE
REFL	REFLECT(ED), (IVE), (OR)
REFR	REFRIGERATOR
REG	REGISTER
REINF	REINFORCE(D), (ING), (MENT)
REM	REMOVE(ABLE)
REP	REPAIR
REPL	REPLACE
REQD	REQUIRED
RESIL	RESILIENT
RET	RETURN
REV	REVISION(S), REVISED
RF	RESILIENT FLOORING
RFG	ROOFING
RFH	ROOF HATCH
RH	RIGHT HAND
RHMS	ROUND HEAD MACHINE SCREW
RHR	RIGHT HAND REVERSE
RHWS	ROUND HEAD WOOD SCREW
RL	ROOF LEADER
RLG	RAILING
RM	ROOM
RND	ROUND
RO	ROUGH OPENING
ROW	RIGHT OF WAY
RS	ROUGH SAWN
RTF	RUBBER TILE FLOORING
RTU	ROOF TOP UNIT
RV	ROOF VENT
RVL	REVEAL
RVS	REVERSE (SIDE)
RVT	RIVET(ED)
RWD	REDWOOD
RWL	RAIN WATER LEADER

S	SOUTH
S2S	SURFACED TWO SIDES
S4S	SURFACED FOUR SIDES
SA	SUPPLY AIR
SALV	SALVAGE
SAT	SUSPENDED ACOUSTICAL TILE
SB	SPLASH BLOCK
SBSTR	SUBSTRATE
SC	SOLID CORE
SCD	SEAT COVER DISPENSER
SCHED	SCHEDULE
SCP	SCUPPER
SCRN	SCREEN
SD	STORM DRAIN
SDBL	SANDBLAST
SECT	SECTION
SGL	SINGLE
SHR	SHOWER
SHT	SHEET(ING)
SHTHG	SHEATHING
SHV	SHELVES (ING)
SIM	SIMILAR
SKLT	SKYLIGHT
SLD	SEALED
SLDG	SLIDE (ING)
SLDR	SOLDER
SLNT	SEALANT
SLV	SLEEVE
SMACNA	SHEET METAL AND AIR CONDITIONING CONTRACTORS NATIONAL ASSOCIATION
SMLS	SEAMLESS
SND	SANITARY NAPKIN DISPENSER
SNDINS	SOUND INSULATION
SNDU	SANITARY NAPKIN DISPOSAL UNIT
SNT	SEALANT
SPC	SUSPENDED PLASTER CEILING
SPD	SOAP DISPENSER
SPEC	SPECIFICATION(S) (ED)
SPRT	SUPPORT
SQ	SQUARE
SSK	SERVICE SINK
SST	STAINLESS STEEL
STA	STATION
STAG	STAGGERED
STC	SOUND TRANSMISSION CLASS
STD	STANDARD
STG	SEATING
STIF	STIFFENER
STIR	STIRRUP
STL	STEEL
STOR	STORAGE
STR	STRAIGHT
ST	STREET
STRCT	STRUCTURAL
STU	STRUCT
SUSP	SUSPENDED
SV	SHEET VINYL
SYMM	SYMMETRICAL
SYNTH	SYNTHETIC
SYS	SYSTEM

T	TREAD
T & B	TOP AND BOTTOM
TB	THRU BOLT
TBE	THREADED BOTH ENDS
TBM	TEMPORARY BENCH MARK
TD	TOWEL DISPENSER
TDR	TOWEL DISPENSER/ RECEPTACLE
TEL	TELEPHONE
TEMP	TEMPORARY
TER	TERRAZZO
TFA	TO FLOOR ABOVE
TFB	TO FLOOR BELOW
T & G	TONGUE & GROOVE
THD	THREAD(ED)
THERM	THERMAL
THK	THICK(NESS)
THRES	THRESHOLD
TKBD	TACKBOARD
TMPD	TEMPERED
TOB	TOP OF BEAM
TOC	TOP OF CURB
TOF	TOP OF FOOTING
TOFF	TOP OF FINISH FLOOR
TOJ	TOP OF JOIST
TOL	TOLERANCE
TOM	TOP OF MASONRY
TOP	TOP OF PARAPET
TOPV	TOP OF PAVEMENT
TOS	TOP OF SHEATHING
TOSL	TOP OF SLAB
TOST	TOP OF STEEL
TOW	TOP OF WALL
TPD	TOILET PAPER DISPENSER
TPTN	TOILET PARTITION
TS	TUBE STEEL
TWLB	TOWEL BAR
TV	TELEVISION
TYP	TYPICAL

UC	UNDERCUT
UGND	UNDERGROUND
UL	UNDERWRITERS LABORATORY
UNFIN	UNFINISHED
UON	UNLESS OTHERWISE NOTED
UR	URINAL
VAR	VARIES
VB	VINYL BASE
VCT	VINYL COMPOSITION TILE
VERT	VERTICAL
VEST	VESTIBULE
VFAT	VINYL FACED ACOUSTIC TILE
VIF	VERIFY IN FIELD
VJ	V-JOINT(ED)
VNR	VENEER
VR	VAPOR RETARDER
VTR	VENT THROUGH ROOF
VWC	VINYL WALL COVERING

W/	WITH
W/W	WALL TO WALL
W/O	WITHOUT
W	WEST
WBL	WOOD BLOCKING
WC	WATER CLOSET
WD	WOOD
WDP	WOOD PANELING
WDW	WINDOW
WF	WIDE FLANGE
WFS	WOOD FURRING STRIP
WGL	WIRED GLASS
WH	WALL HUNG
WI	WROUGHT IRON
WID	WIDTH, WIDE
WLD	WELD(ED)
WM	WIRE MESH
WP	WATERPROOF(ING)
WPT	WORKING POINT
WR	WIRE ROPE
WS	WOOD SCREW
WSCT	WAINSCOT
WT	WEIGHT
WWF	WELDED WIRE FABRIC

XBRACE	CROSS BRACE
XFMR	TRANSFORMER
XSECT	CROSS SECTION

YCO	YARD CLEANOUT
YD	YARD

GOVERNING AGENCIES

DIVISION OF THE STATE ARCHITECT
STRUCTURAL SAFETY SECTION (DSA/SSS)
700 NORTH ALAMEDA STREET, SUITE 5-500
LOS ANGELES, CALIFORNIA 90012
(213) 897-3995

DIVISION OF THE STATE ARCHITECT
FIRE AND LIFE SAFETY SECTION (DSA/FLS)
700 NORTH ALAMEDA STREET, SUITE 5-500
LOS ANGELES, CALIFORNIA 90013
(213) 897-3995

GOVERNING CODES

2016 CALIFORNIA BUILDING STANDARDS ADMINISTRATIVE CODE
CALIFORNIA CODE OF REGULATIONS
(CCR) TITLE 24, PART 1

2016 CALIFORNIA BUILDING CODE (CBC)
CALIFORNIA CODE OF REGULATIONS
(CCR) TITLE 24, PART 2
(2015 INTERNATIONAL BUILDING CODE (IBC) W/ CALIFORNIA AMENDMENTS)

2016 CALIFORNIA ELECTRICAL CODE (CEC)
CALIFORNIA CODE OF REGULATIONS
(CCR) TITLE 24, PART 3
(2014 NATIONAL ELECTRIC CODE (NEC) W/ CALIFORNIA AMENDMENTS)

2016 CALIFORNIA MECHANICAL CODE (CMC)
CALIFORNIA CODE OF REGULATIONS
(CCR) TITLE 24, PART 4
(2015 UNIFORM MECHANICAL CODE (UMC) W/ CALIFORNIA AMENDMENTS)

2016 CALIFORNIA PLUMBING CODE (CPC)
CALIFORNIA CODE OF REGULATIONS
(CCR) TITLE 24, PART 5
(2015 UNIFORM PLUMBING CODE (UPC) W/ CALIFORNIA AMENDMENTS)

2016 CALIFORNIA ENERGY CODE
CALIFORNIA CODE OF REGULATIONS
(CCR) TITLE 24, PART 6

2016 CALIFORNIA HISTORICAL BUILDING CODE
CALIFORNIA CODE OF REGULATIONS
(CCR) TITLE 24, PART 8

2016 CALIFORNIA FIRE CODE (CFC)
CALIFORNIA CODE OF REGULATIONS
(CCR) TITLE 24, PART 9
(2015 INTERNATIONAL FIRE CODE (IFC) W/ CALIFORNIA AMENDMENTS)

2016 CALIFORNIA EXISTING BUILDING CODE
CALIFORNIA CODE OF REGULATIONS
(CCR) TITLE 24, PART 10
(2015 INTERNATIONAL EXISTING BUILDING CODE (IEBC) W/ CALIFORNIA AMENDMENTS)

2016 CALIFORNIA GREEN BUILDING STANDARDS CODE (CAL GREEN)
CALIFORNIA CODE OF REGULATIONS
(CCR) TITLE 24, PART 11

2016 CALIFORNIA REFERENCED STANDARDS CODE -CALIFORNIA CODE OF REGULATIONS
(CCR) TITLE 24, PART 12
1990 STATE FIRE MARSHAL REGULATIONS (AS AMENDED TO DATE) CALIFORNIA CODE OF REGULATIONS (CCR) TITLE 19

CALIFORNIA ELEVATOR SAFETY CODE, CALIFORNIA CODE OF REGULATIONS (CCR) TITLE 8
(AS AMENDED TO DATE)

2010 AMERICANS WITH DISABILITY ACT (ADA) STANDARDS FOR ACCESSIBLE DESIGN (ADAS)

APPLICABLE NFPA , UL AND ICC STANDARDS

NFPA 13	-	AUTOMATIC SPRINKLER SYSTEMS, 2016 EDITION
NFPA 14	-	STANDPIPE SYSTEMS, 2013 EDITION
NFPA 17	-	DRY CHEMICAL EXTINGUISHING SYSTEMS, 2013 EDITION
NFPA 17A	-	WET CHEMICAL SYSTEMS, 2013 EDITION
NFPA 20	-	STATIONARY PUMPS, 2016 EDITION
NFPA 22	-	WATER TANKS FOR PRIVATE FIRE PROTECTION, 2013 EDITION
NFPA 24	-	PRIVATE FIRE MAINS, 2016 EDITION
NFPA 25	-	WATER BASED FIRE PROTECTION SYSTEMS, 2013 EDITION
NFPA 72	-	NATIONAL FIRE ALARM CODE, 2016 EDITION
NFPA 80	-	FIRE DOORS AND OTHER OPENING PROTECTIVES, 2016 EDITION
NFPA 92	-	STANDARD FOR SMOKE CONTROL SYSTEMS, 2015 EDITION
NFPA 253	-	CRITICAL RADIANT FLUX OF FLOOR COVERINGS, 2015 EDITION
NFPA 2001	-	CLEAN AGENT FIRE EXTINGUISHING SYSTEMS, 2015 EDITION
ICC 300	-	ICC STANDARDS FOR BLEACHERS, FOLDING AND TELESCOPIC SEATING, AND GRANDSTANDS, 2012 EDITION
UL 300	-	FIRE TESTING OF FIRE EXTINGUISHING SYSTEMS FOR PROTECTION OF COMMERCIAL RESTAURANT COOKING AREAS, 2005 EDITION
UL 464	-	AUDIBLE SIGNAL APPLIANCES, 2003 EDITION
UL 521	-	HEAT DETECTORS FOR FIRE PROTECTIVE SIGNALING SYSTEMS, 1999 EDITION

NOTE: ALL NFPA STANDARDS AS LISTED ARE TO CONFORM TO THE EDITION AS LISTED WITH THE LATEST CALIFORNIA AMENDMENTS. REFERENCE THE 2016 CBC, TITLE 24, PART 2 - CHAPTER 35 FOR ADDITIONAL APPLICABLE NFPA, UL. STANDARDS AND ANY CALIFORNIA AMENDMENTS TO NFPA STANDARDS.

ARCHITECTS
WLC
CLIENT FOCUSED • PASSION DRIVEN

SOUTHERN CALIFORNIA
8163 ROCHESTER AVENUE, SUITE 100
RANCHO CUCAMONGA
CALIFORNIA 91730-0729

TEL: 909-987-0909
www.wlcarchitects.com

LONGFELLOW ELEMENTARY SCHOOL
HVAC REPLACEMENT
COMPTON UNIFIED SCHOOL DISTRICT
1101 S DWIGHT AVE.
COMPTON, CA 90220

LICENSED ARCHITECT
MARK GRAHAM
C-26046
03-31-19
STATE OF CALIFORNIA

CONSULTANT

IDENTIFICATION STAMP
DSA, OF THE STATE ARCHITECT
OFFICE OF REGULATION SERVICES
APPL 03-118423
AC FLS SS EY
DATE MAR 0 6 2018
FILE: 19-23

NO	DATE	BY	DESCRIPTION
1			REVISIONS

DRAWN:	CHECKED:
DATE: 3/6/2018	SCALE:
PROJECT NUMBER: 1723400	

ARCH DWGS ABBREVIATIONS & GOVERNING CODE

DRAWING NUMBER: A0.2

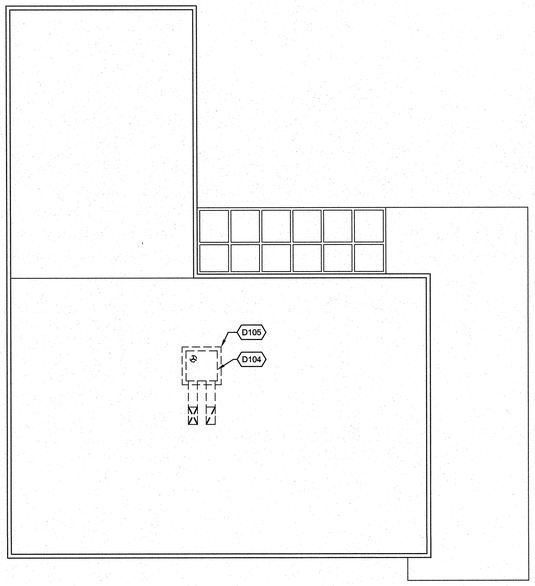

NORTH

BUILDING A - DEMO ROOF PLAN | 1/8" = 1'-0" | 2

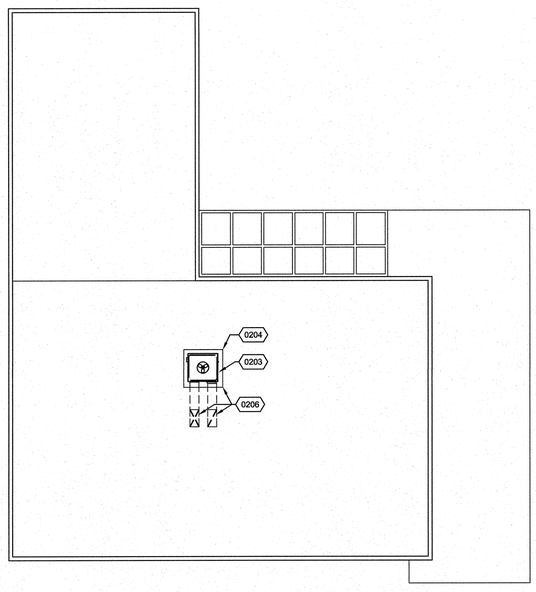

NORTH

BUILDING A - NEW ROOF PLAN | 1/8" = 1'-0" | 3

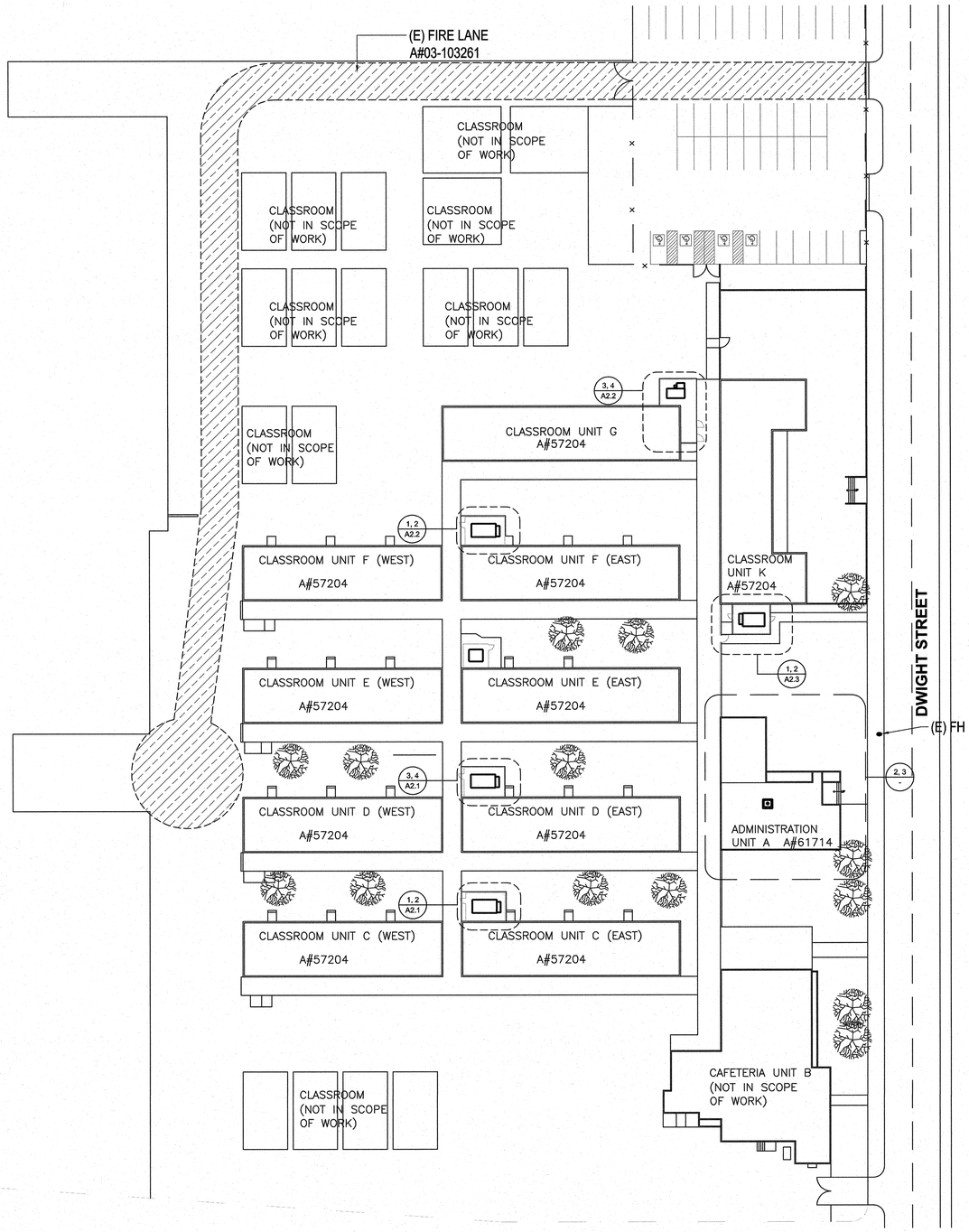

NORTH

SITE PLAN | 1" = 30'-0" | 1

-

D104 (E) HVAC UNIT TO BE REMOVED

D105 REMOVE (E) COUNTER FLASHING

0203 (N) HVAC UNIT, REF TO MECH DWGS.

0204 (N) 20 GA SHEET METAL COUNTER FLASHING, PAINTED

0206 PATCH ROOFING AT ROOF OPENING AND PLATFORM TO MATCH EXISTING ROOFING.

REFERENCE NOTES

BUILDING DATA

BUILDING	OCCU TYPE	CONSTR TYPE	AREA
A	B	TYPE V-B	3,194 SF
C	E	TYPE V-B	7,080 SF
D	E	TYPE V-B	7,080 SF
E	E	TYPE V-B	7,080 SF
F	E	TYPE V-B	7,080 SF
G	E	TYPE V-B	3,840 SF
K	E	TYPE V-B	4,462 SF

WLC ARCHITECTS
CLIENT FOCUSED • PASSION DRIVEN

SOUTHERN CALIFORNIA
8163 ROCHESTER AVENUE, SUITE 100
RANCHO CUCAMONGA
CALIFORNIA 91730-0729

TEL: 909-987-0909

www.wlcarchitects.com

LONGFELLOW ELEMENTARY SCHOOL HVAC REPLACEMENT

COMPTON UNIFIED SCHOOL DISTRICT

1101 S DWIGHT AVE.
COMPTON, CA 90220

LICENSED ARCHITECT
MARK GRAHAM
C-26046
03-31-19
STATE OF CALIFORNIA

CONSULTANT

IDENTIFICATION STAMP
DIV. OF THE STATE ARCHITECT
OFFICE OF REGULATION SERVICES
APPL 03-118423
AC — FLS — SS —
DATE MAR 0 6 2018
FILE: 19-23

NO	DATE	BY	DESCRIPTION
1			REVISIONS

DRAWN: CTW | CHECKED:
DATE: 3/6/2018 | SCALE:
PROJECT NUMBER: 1723400

SITE PLAN AND BUILDING A DEMO & NEW ROOF PLANS

DRAWING NUMBER: A1.0

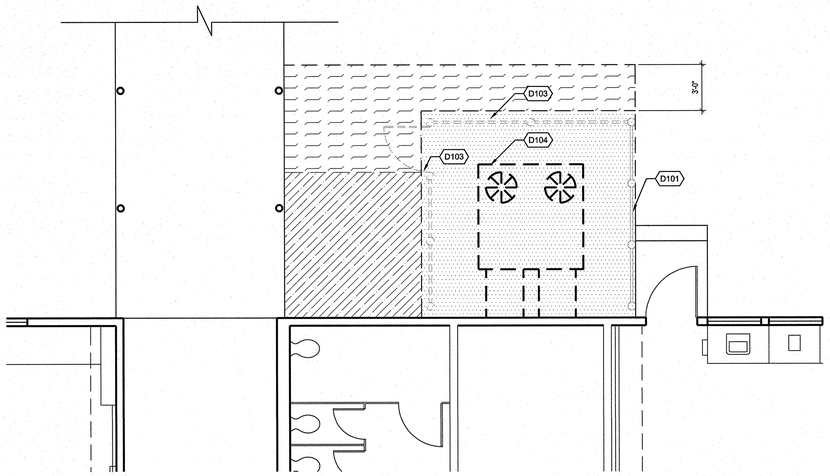

NORTH

BUILDING D - ENLARGED DEMO FLOOR PLAN | 1/4" = 1'-0" | 3

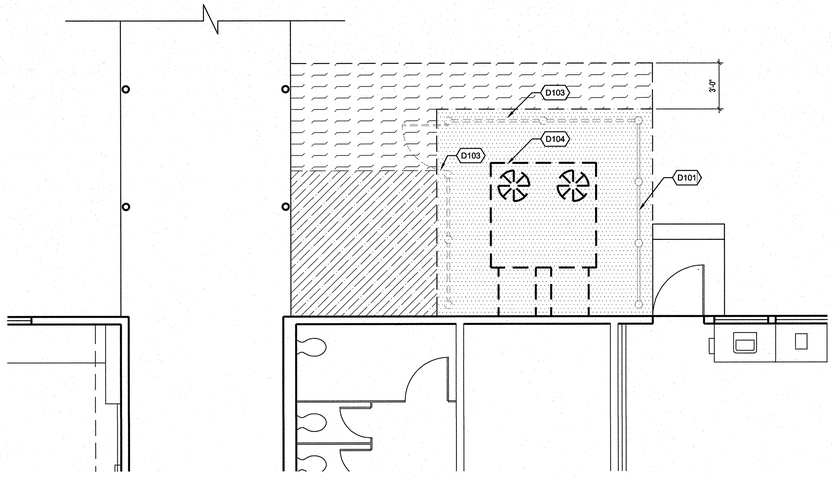

NORTH

BUILDING C - ENLARGED DEMO FLOOR PLAN | 1/4" = 1'-0" | 1

D101 (E) CHAIN LINK FENCE TO REMAIN.

D102 (E) CHAIN LINK GATE TO REMAIN.

D103 (E) CHAIN LINK FENCE, GATE, AND POST TO BE REMOVED AND AND PROTECTED FOR REINSTALLATION, TYP.

D104 (E) HVAC UNIT TO BE REMOVED

0201 RINSTALL (E) CHAIN LINK FENCE/GATE, REF TO DTL 6/A2.3

0202 (N) CHAIN LINK FENCE TO MATCH (E), REF TO DTL 6/A2.3

0203 (N) HVAC UNIT, REF TO MECH DWGS.

0205 (N) DUCT WORK, REF TO MECH DWGS.

REFERENCE NOTES

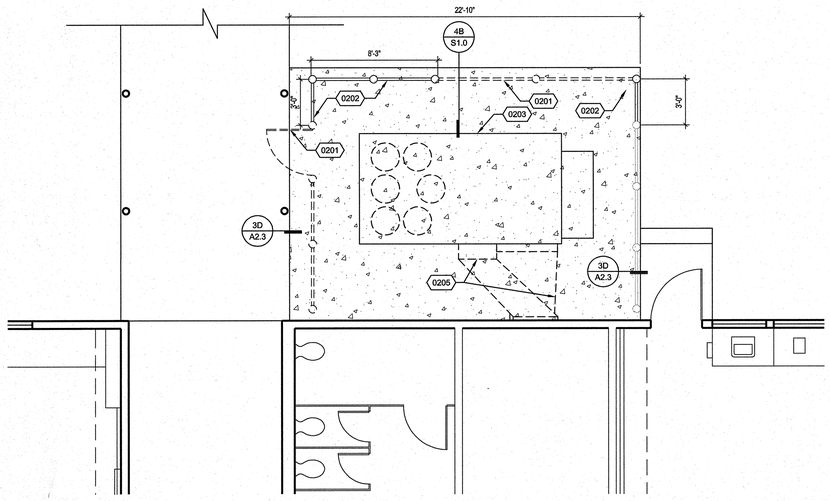

NORTH

BUILDING D - ENLARGED NEW FLOOR PLAN | 1/4" = 1'-0" | 4

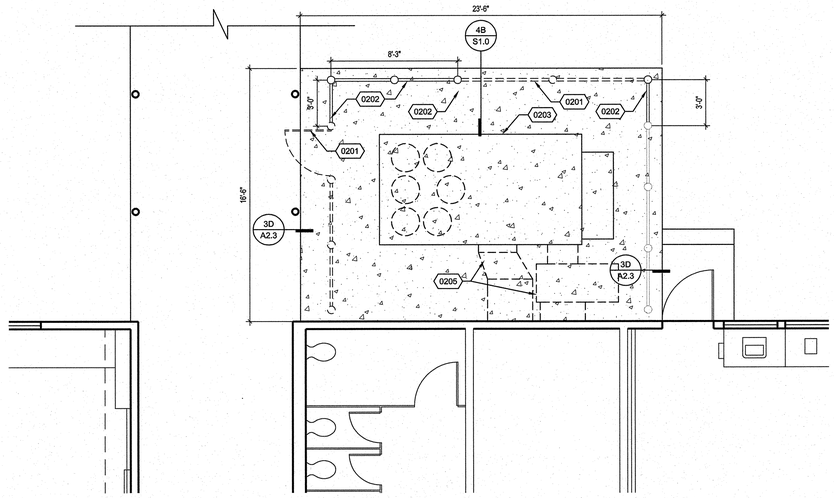

NORTH

BUILDING C - ENLARGED NEW FLOOR PLAN | 1/4" = 1'-0" | 2

DEMOLISH (E) AC PAVING

DEMOLISH (E) CONCRETE PAD

DEMOLISH (E) TURF

(N) CONCRETE PAD, REF TO DTL 3/A2.3

LEGEND

ARCHITECTS
WLC
CLIENT FOCUSED • PASSION DRIVEN

SOUTHERN CALIFORNIA
8163 ROCHESTER AVENUE, SUITE 100
RANCHO CUCAMONGA
CALIFORNIA 91730-0729

TEL: 909-987-0909

www.wlcarchitects.com

LONGFELLOW ELEMENTARY SCHOOL HVAC REPLACEMENT

COMPTON UNIFIED SCHOOL DISTRICT

1101 S DWIGHT AVE.
COMPTON, CA 90220

LICENSED ARCHITECT
MARK GRAHAM
C-26046
03-31-19
STATE OF CALIFORNIA

CONSULTANT

IDENTIFICATION STAMP
DSA / OF THE STATE ARCHITECT
OFFICE OF REGULATION SERVICES
APPL 03-118423
FILE: 19-23
AC — FLS — SS
DATE MAR 07 2018

NO	DATE	BY	DESCRIPTION
1			REVISIONS

DRAWN: CTW	CHECKED:
DATE: 3/6/2018	SCALE:
PROJECT NUMBER: 1723400	

BUILDING C & D ENLARGED DEMO & NEW FLOOR PLANS

DRAWING NUMBER: A2.1

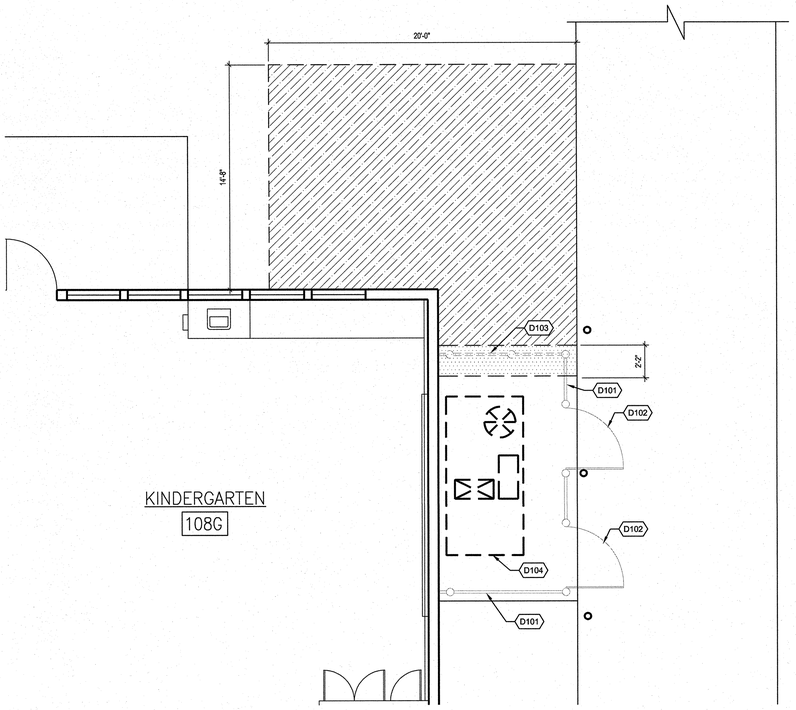

BUILDING G - ENLARGED DEMO FLOOR PLAN | 1/4" = 1'-0" | 3

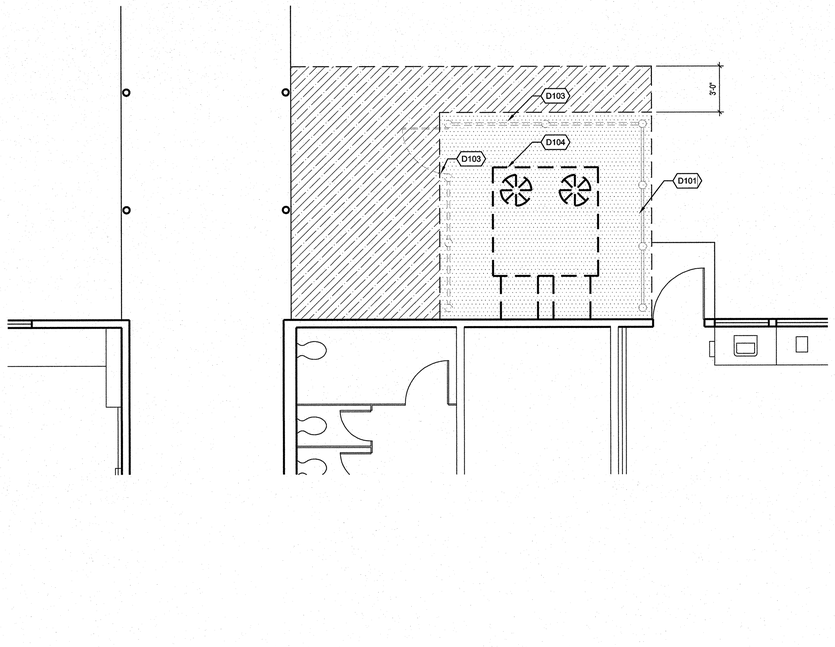

BUILDING F - ENLARGED DEMO FLOOR PLAN | 1/4" = 1'-0" | 1

D101 (E) CHAIN LINK FENCE TO REMAIN.

D102 (E) CHAIN LINK GATE TO REMAIN.

D103 (E) CHAIN LINK FENCE, GATE, AND POST TO BE REMOVED AND AND PROTECTED FOR REINSTALLATION, TYP.

D104 (E) HVAC UNIT TO BE REMOVED

0201 RINSTALL (E) CHAIN LINK FENCE/GATE, REF TO DTL 6/A2.3

0202 (N) CHAIN LINK FENCE TO MATCH (E), REF TO DTL 6/A2.3

0203 (N) HVAC UNIT, REF TO MECH DWGS.

0204 (N) CHAIN LINK FENCE GATE TO MATCH (E), REF TO DTL 7/A2.3

0205 (N) DUCT WORK, REF TO MECH DWGS.

REFERENCE NOTES

DEMOLISH (E) AC PAVING

DEMOLISH (E) CONCRETE PAD

DEMOLISH (E) TURF

(N) CONCRETE PAD, REF TO DTL 3/A2.3

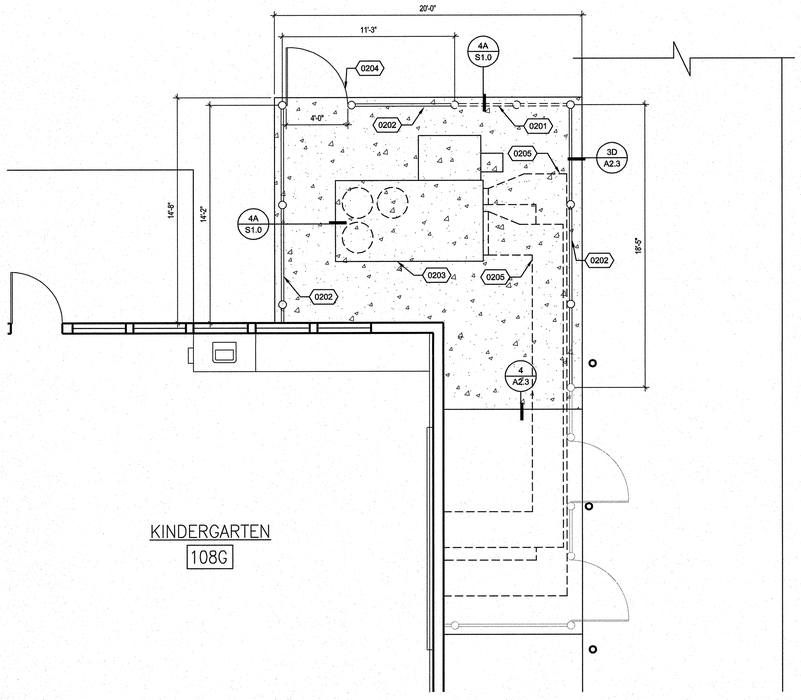

BUILDING G - ENLARGED NEW FLOOR PLAN | 1/4" = 1'-0" | 4

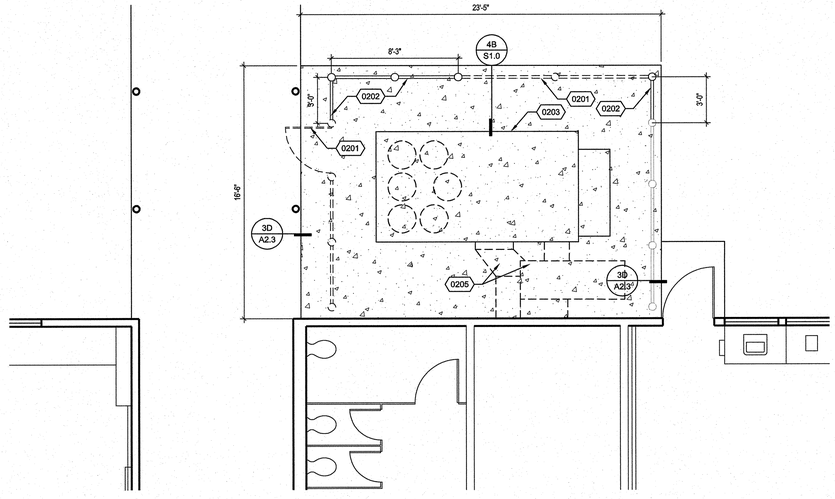

BUILDING F - ENLARGED NEW FLOOR PLAN | 1/4" = 1'-0" | 2

LEGEND

ARCHITECTS
WLC
CLIENT FOCUSED • PASSION DRIVEN

SOUTHERN CALIFORNIA
8163 ROCHESTER AVENUE, SUITE 100
RANCHO CUCAMONGA
CALIFORNIA 91730-0729

TEL: 909-987-0909

www.wlcarchitects.com

LONGFELLOW ELEMENTARY SCHOOL HVAC REPLACEMENT

COMPTON UNIFIED SCHOOL DISTRICT

1101 S DWIGHT AVE.
COMPTON, CA 90220

LICENSED ARCHITECT
MARK GRAHAM
C-28046
03-31-19
STATE OF CALIFORNIA

CONSULTANT

IDENTIFICATION STAMP
DIV. OF THE STATE ARCHITECT
OFFICE OF REGULATION SERVICES
APPL 03-118423
AC FLS SS EV
DATE MAY 0 8 2019
FILE: 19-23

NO	DATE	BY	DESCRIPTION
1			REVISIONS

DRAWN: CTW | CHECKED:
DATE: 3/6/2018 | SCALE:
PROJECT NUMBER: 1723400

BUILDING F & G ENLARGED DEMO & NEW FLOOR PLANS

DRAWING NUMBER: A2.2

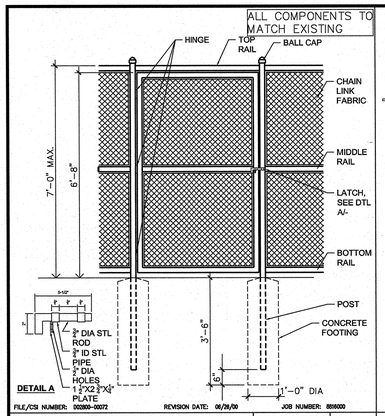

CHAINLINK FENCE GATE | 1/2"=1'-0" | 7

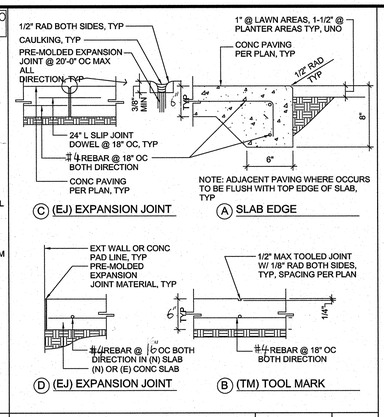

NEW CONC PAVING | 1-1/2" = 1'-0" | 3

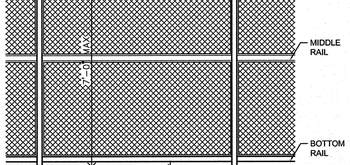

NEW CONC PAVING | 1-1/2" = 1'-0" | 4

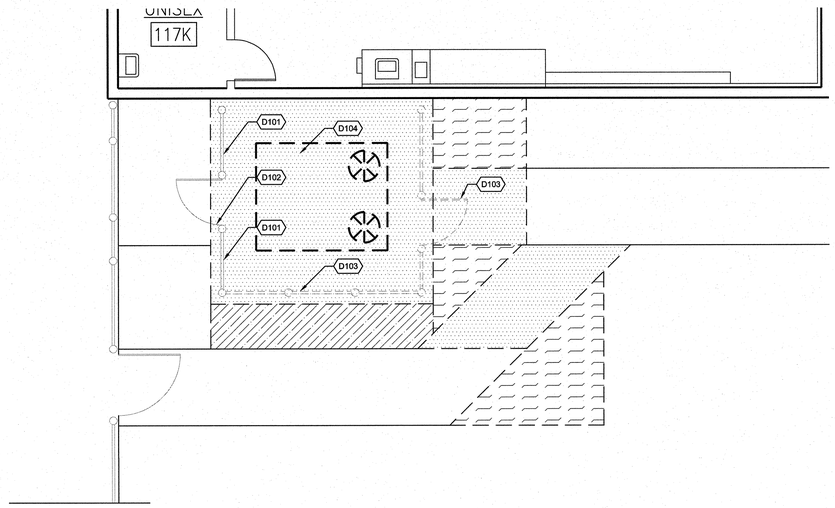

BUILDING K - ENLARGED DEMO FLOOR PLAN | 1/4" = 1'-0" | 1

NORTH

REFERENCE NOTES

- D101 (E) CHAIN LINK FENCE TO REMAIN.
- D102 (E) CHAIN LINK GATE TO REMAIN.
- D103 (E) CHAIN LINK FENCE, GATE, AND POST TO BE REMOVED AND AND PROTECTED FOR REINSTALLATION, TYP.
- D104 (E) HVAC UNIT TO BE REMOVED
- 0201 RINSTALL (E) CHAIN LINK FENCE/GATE, REF TO DTL 6/A2.3
- 0202 (N) CHAIN LINK FENCE TO MATCH (E), REF TO DTL 6/A2.3
- 0203 (N) HVAC UNIT, REF TO MECH DWGS.
- 0205 (N) DUCT WORK, REF TO MECH DWGS.

-	8	NEW CONC PAVING	1-1/2" = 1'-0" | 4

-	9	-	- | 5

-	10	CHAIN LINK FENCE	1/2" = 1'-0" | 6

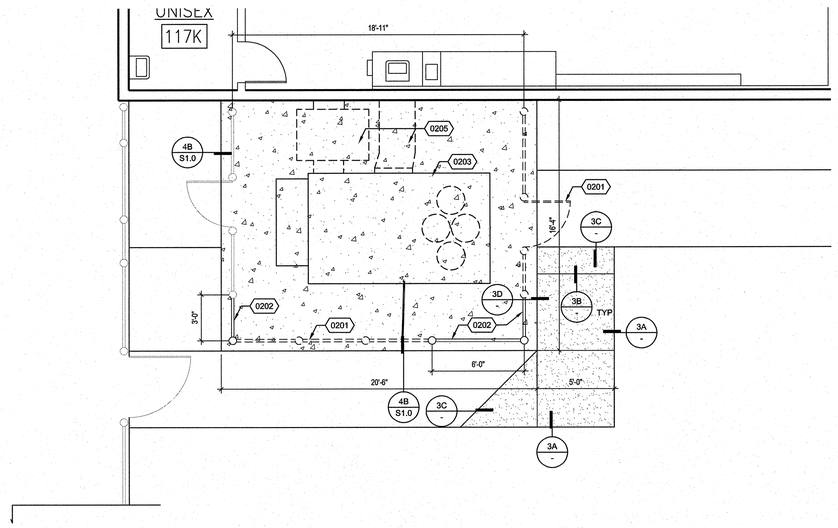

BUILDING K - ENLARGED NEW FLOOR PLAN | 1/4" = 1'-0" | 2

NORTH

LEGEND

- DEMOLISH (E) AC PAVING
- DEMOLISH (E) CONCRETE PAD
- DEMOLISH (E) TURF
- (N) CONCRETE PAD, REF TO DTL 3/A2.3
- (N) CONCRETE PAVING, REF TO DTL 3 & 4/A2.3

ARCHITECTS WLC
CLIENT FOCUSED • PASSION DRIVEN

SOUTHERN CALIFORNIA
8163 ROCHESTER AVENUE, SUITE 100
RANCHO CUCAMONGA
CALIFORNIA 91730-0729
TEL: 909-987-0909
www.wlcarchitects.com

LONGFELLOW ELEMENTARY SCHOOL HVAC REPLACEMENT

COMPTON UNIFIED SCHOOL DISTRICT
1101 S DWIGHT AVE.
COMPTON, CA 90220

LICENSED ARCHITECT MARK GRAHAM C-26046 03-31-19 STATE OF CALIFORNIA

CONSULTANT

IDENTIFICATION STAMP DIV. OF THE STATE ARCHITECT OFFICE OF REGULATION SERVICES
FILE: 19-23
APPL 03-118423
AC FLS SS
DATE MAR 06 2018

NO	DATE	BY	DESCRIPTION
1			REVISIONS

DRAWN: CTW	CHECKED:
DATE: 3/6/2018	SCALE:
PROJECT NUMBER: 1723400	

BLDG K ENLARGED DEMO & NEW FLOOR PLANS AND DETAILS

DRAWING NUMBER: A2.3

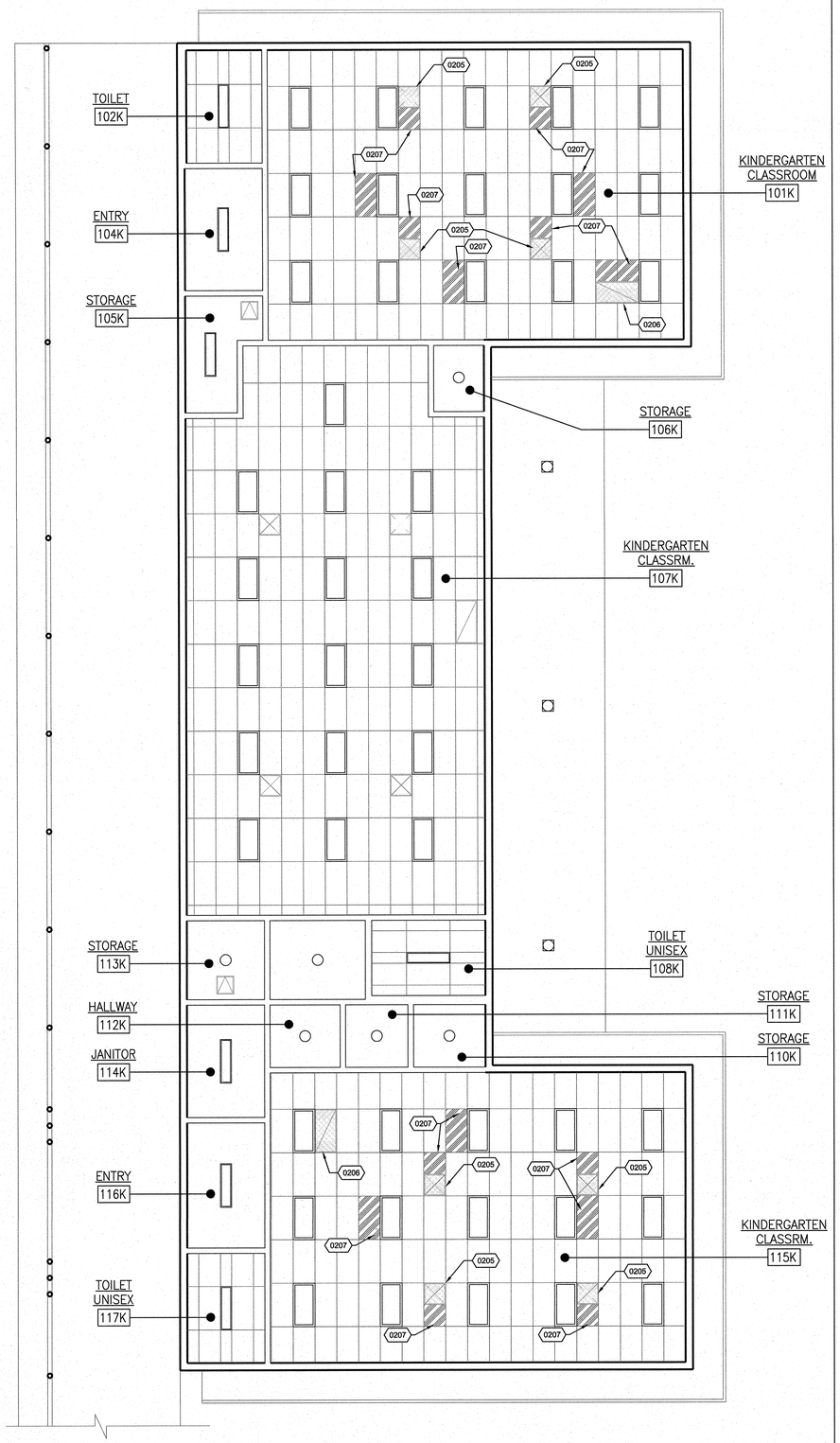

BUILDING K - ENLARGED NEW REFLECTED CEILING PLAN | 3/16" = 1'-0" | 2

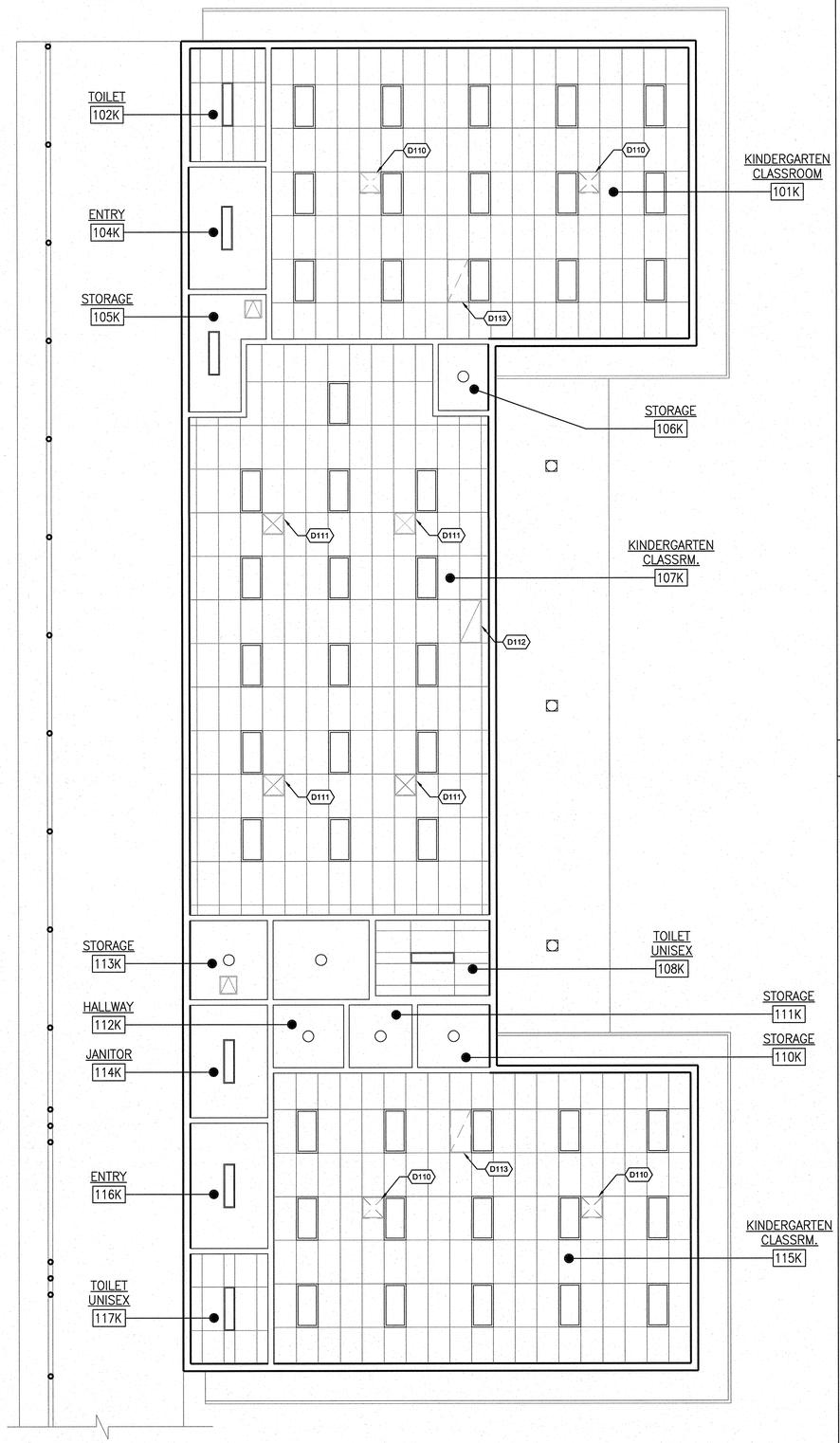

BUILDING K - ENLARGED DEMO REFLECTED CEILING PLAN | 3/16" = 1'-0" | 1

D110 (E) SUPPLY AIR DIFFUSER TO BE REMOVED
D111 (E) SUPPLY AIR DIFFUSER TO REMAIN
D112 (E) RETURN GRILL TO REMAIN
D113 (E) RETURN GRILL TO BE REMOVED
0205 (N) SUPPLY AIR DIFFUSER, REF TO MECH DWGS
0206 (N) RETURN AIR GRILLE, REF TO MECH DWGS
0207 (N) CEILING TILE TO MATCH EXISTING AND MODIFY THE CEILING GRILL TO FIT THE (N) DIFFUSER OR GRILLE

REFERENCE NOTES

1. IT IS THE MECHANICAL CONTRACTOR'S RESPONSE TO MODIFIED THE EXISTING CEILING GRILL AND CEILING TILE TO FIT THE NEW SUPPLY DIFFUSER AND RETURN GRILLE, AND PROVIDE THE NEW CEILING TILE FOR THE REMAIN EXISTING OPENING.

GENERAL NOTES

WLC ARCHITECTS
CLIENT FOCUSED • PASSION DRIVEN
SOUTHERN CALIFORNIA
8163 ROCHESTER AVENUE, SUITE 100
RANCHO CUCAMONGA
CALIFORNIA 91730-0729
TEL: 909-987-0909
www.wlcarchitects.com

LONGFELLOW ELEMENTARY SCHOOL
HVAC REPLACEMENT
COMPTON UNIFIED SCHOOL DISTRICT
1101 S DWIGHT AVE.
COMPTON, CA 90220

LICENSED ARCHITECT
MARK GRAHAM
C-26046
03-31-19
STATE OF CALIFORNIA

CONSULTANT

IDENTIFICATION STAMP
DIV. OF THE STATE ARCHITECT
OFFICE OF REGULATION SERVICES
APPL 03-118423
FILE: 19-23
AC FLS SS EY
DATE MAR 06 2018

NO	DATE	BY	DESCRIPTION
#	REVISIONS		

DRAWN: CTW	CHECKED:
DATE: 3/6/2018	SCALE:
PROJECT NUMBER: 1723400	

BUILDING K ENLARGED DEMO & NEW REFEL CEILING PLANS

DRAWING NUMBER: A3.1

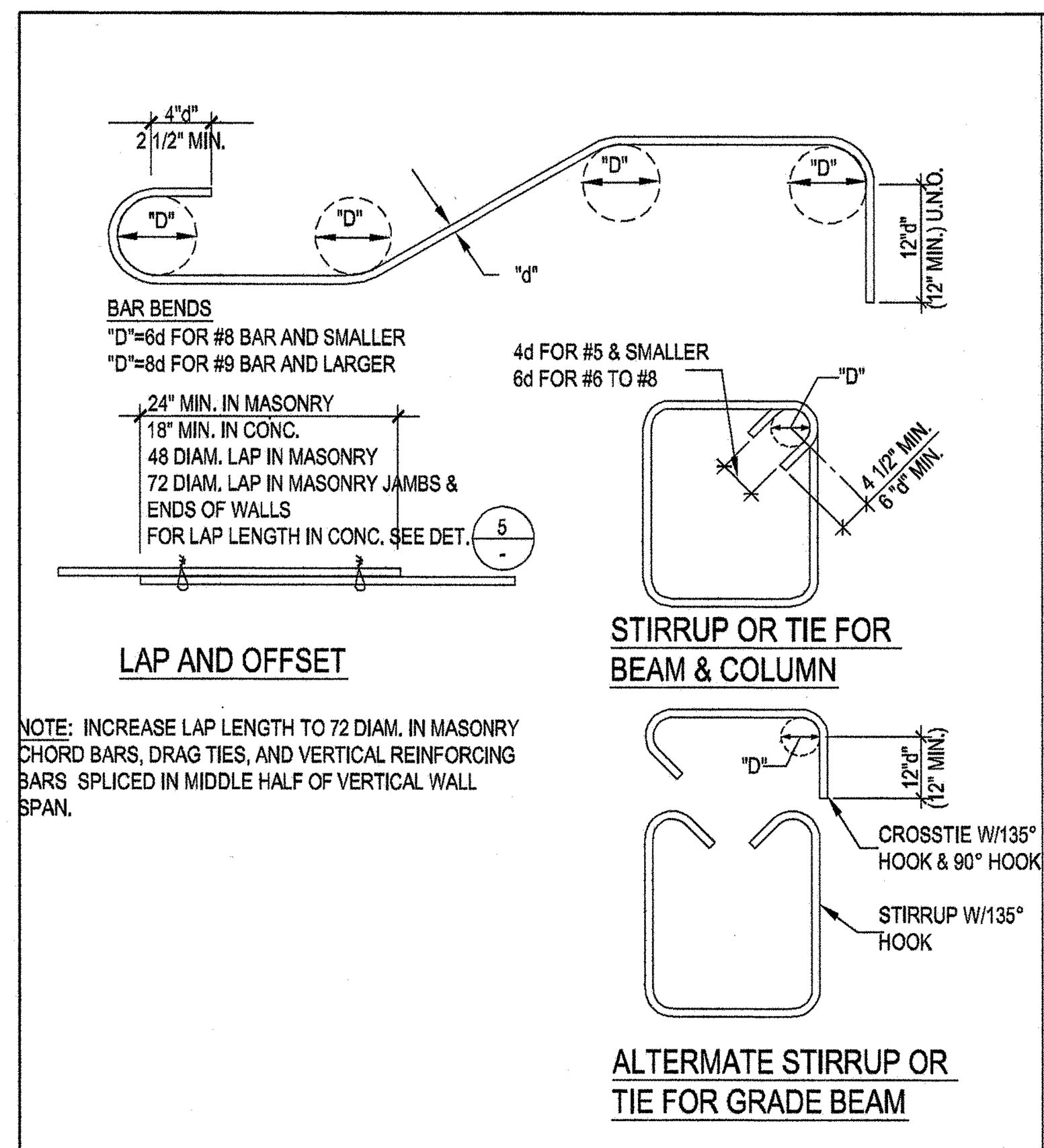

REINFORCING HOOKS AND BENDS | 3/4"=1'-0" | 1

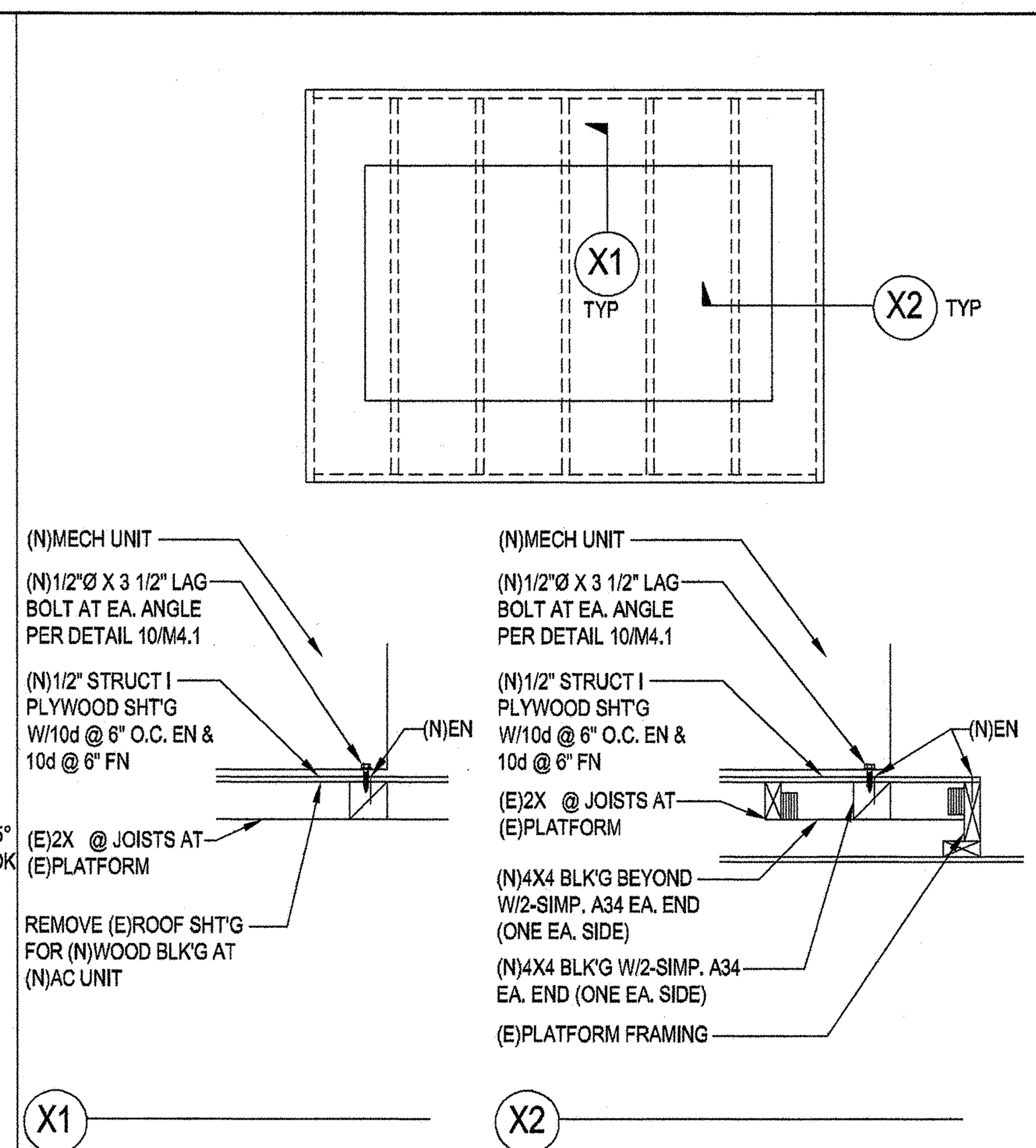

MECH'L PLATFORM | 3/4"=1'-0" | 2

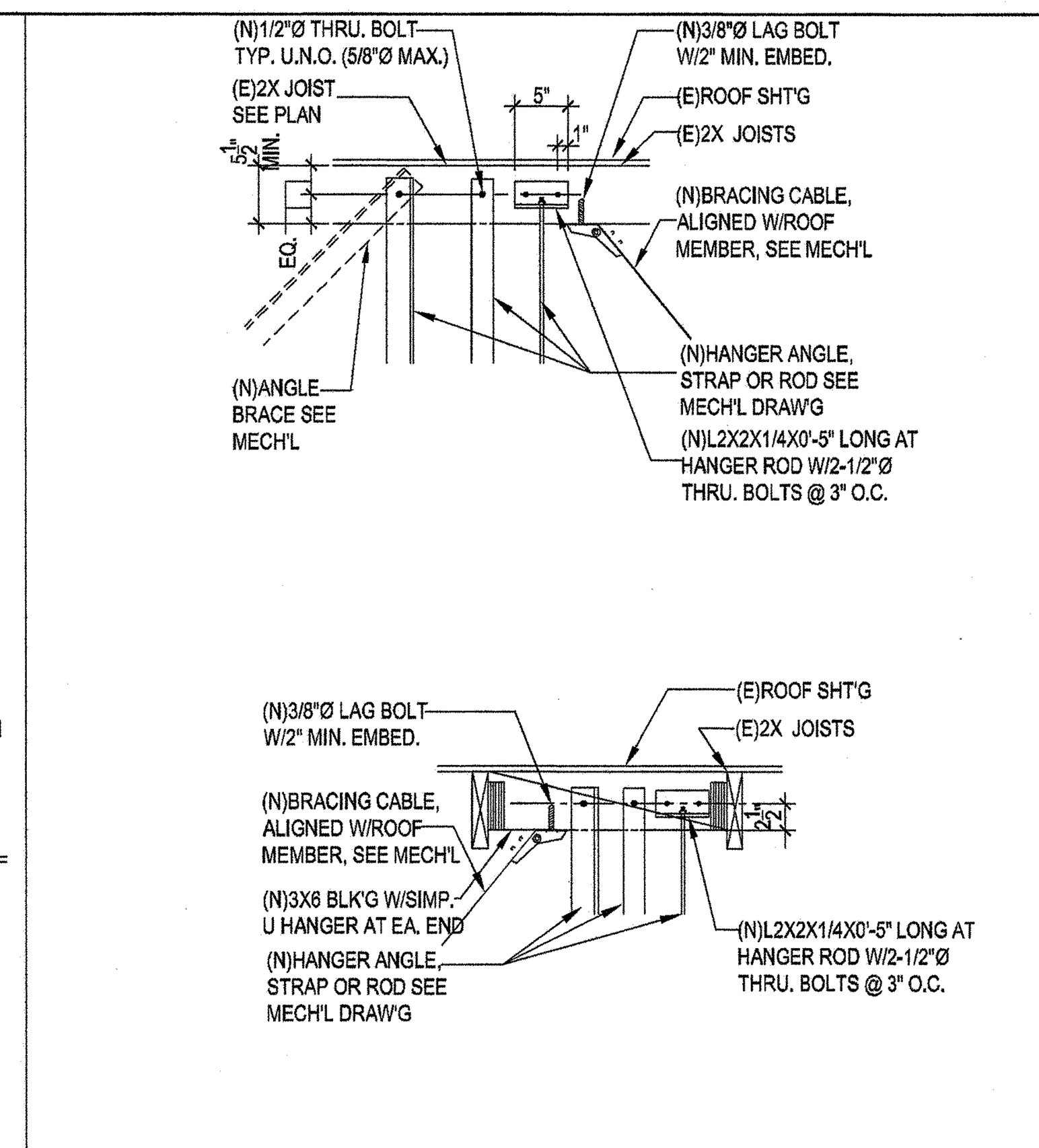

HANGER ANGLE, ROD OR STRAP & BRACE TO (E)ROOF STRUCTURE | 3/4"=1'-0" | 3

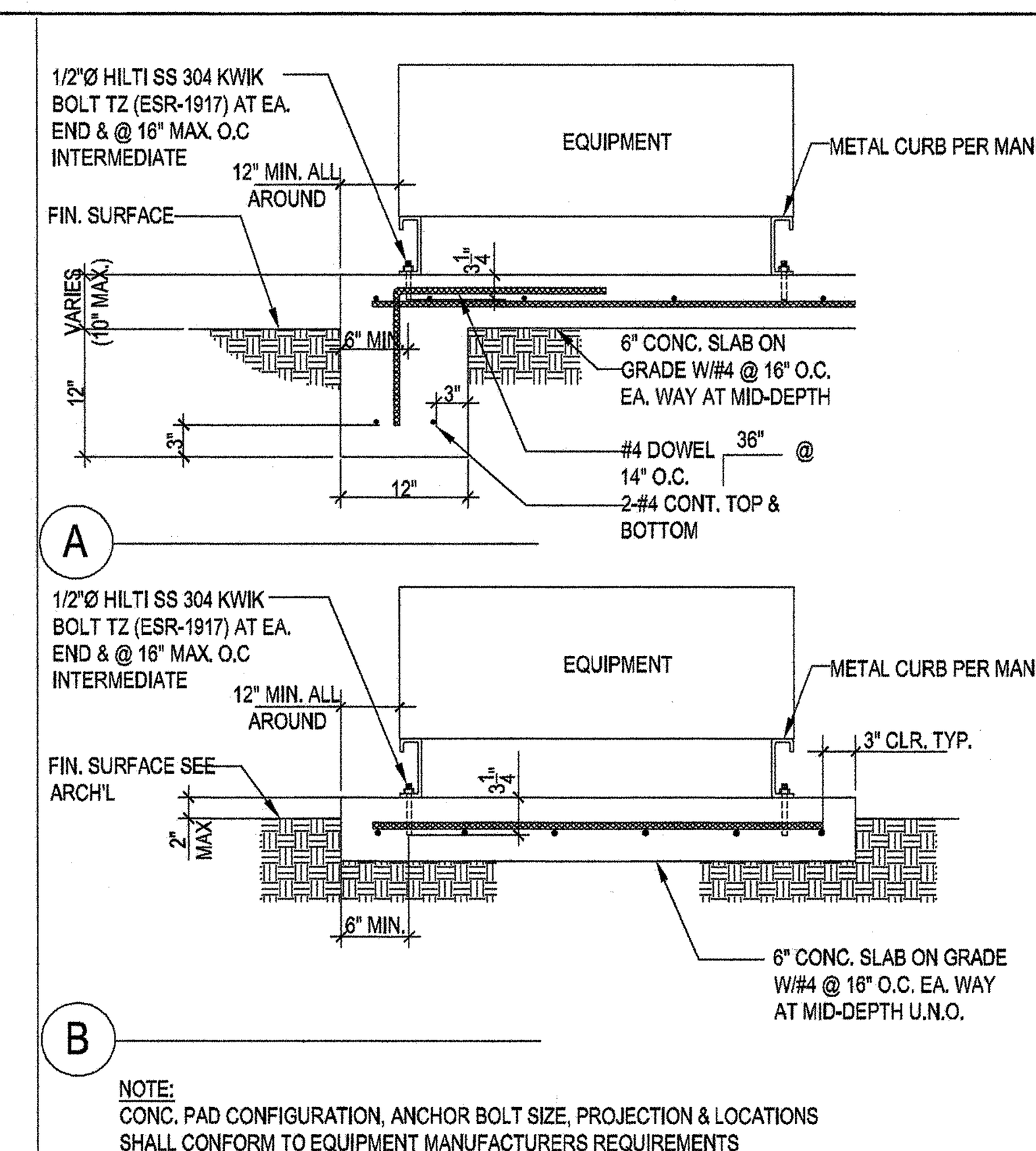

HOUSE KEEPING OR EQUIPMENT PAD | 3/4"=1'-0" | 4

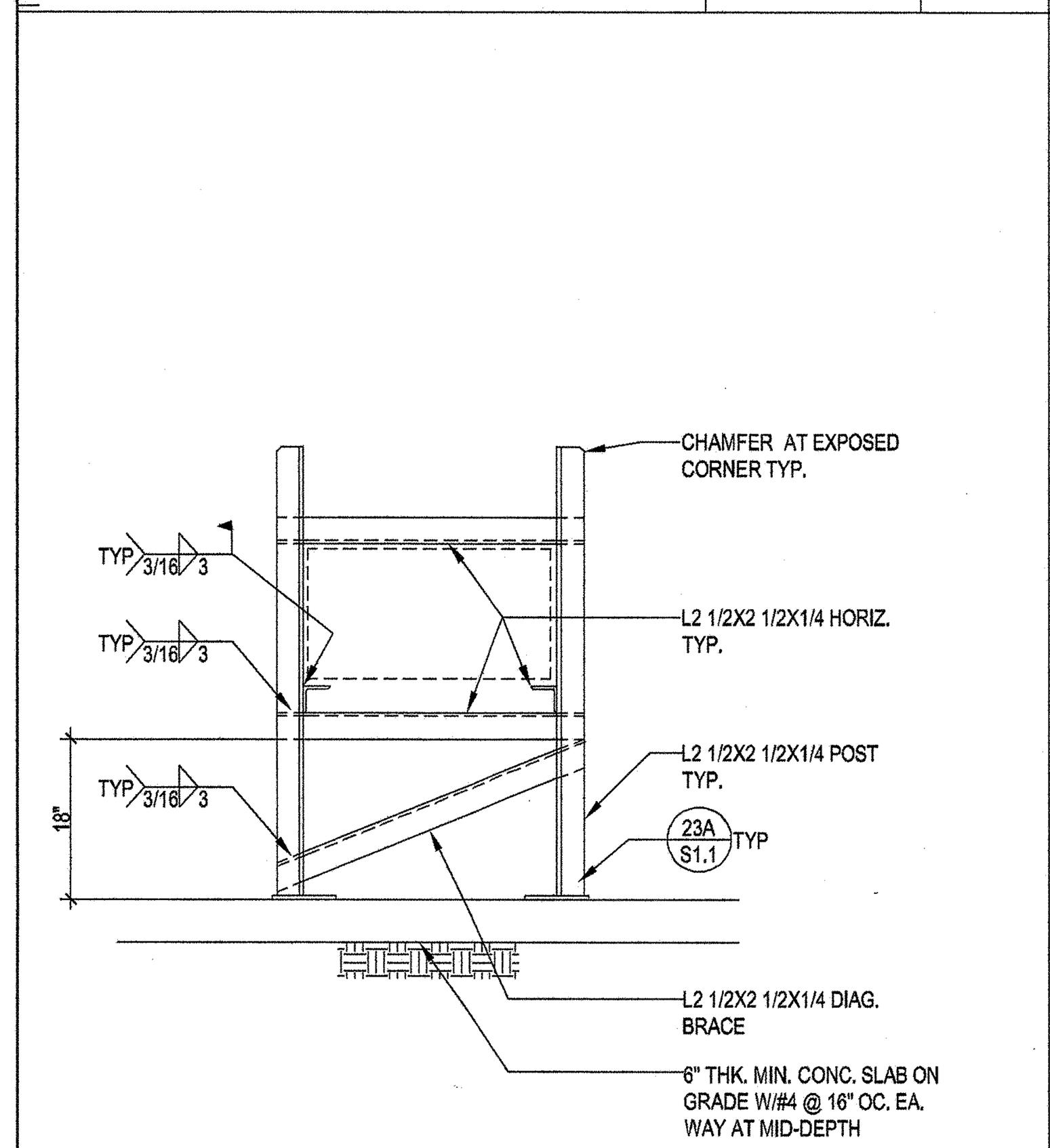

3/4"=1'-0" | 7

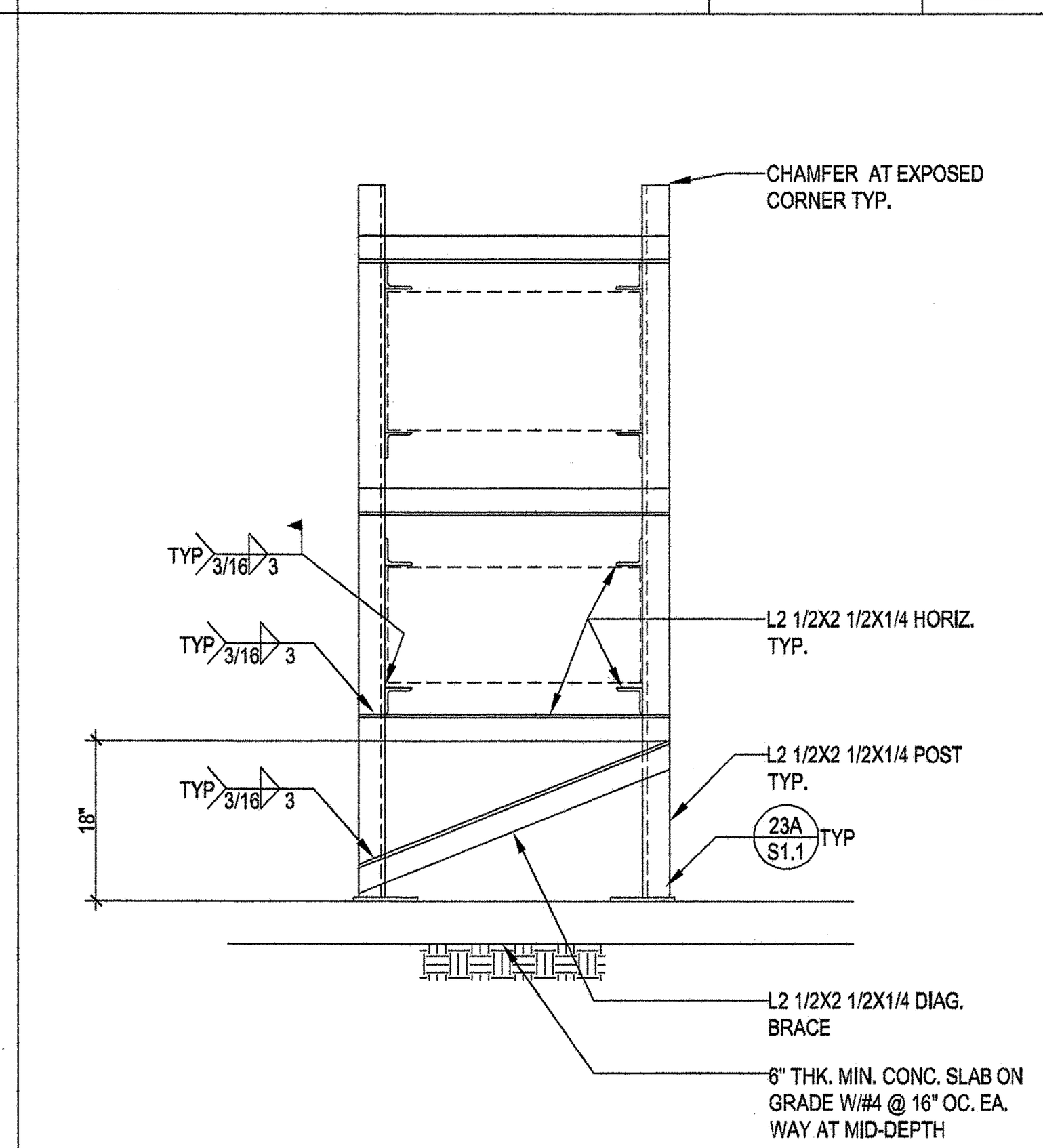

3/4"=1'-0" | 8

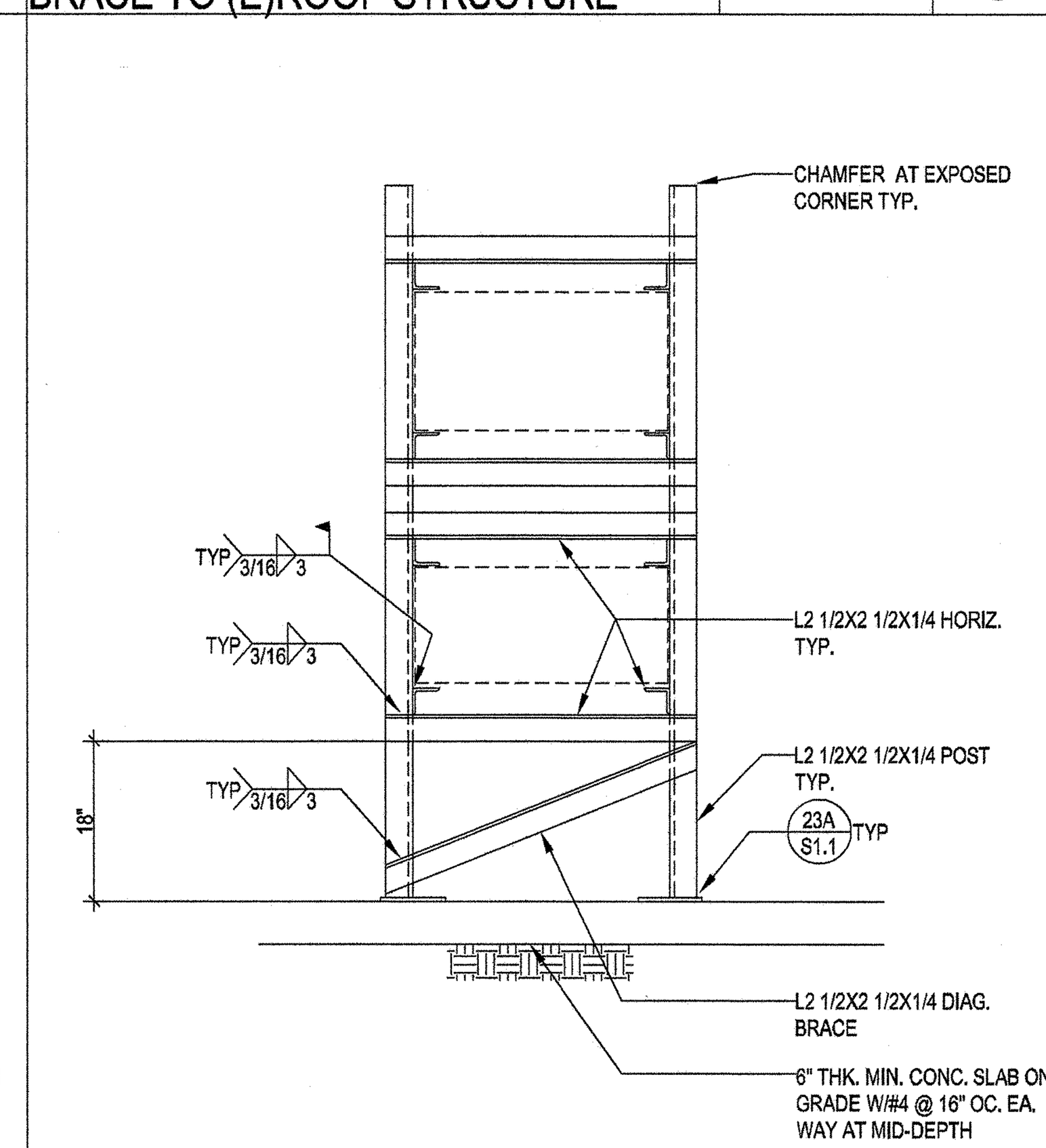

3/4"=1'-0" | 9

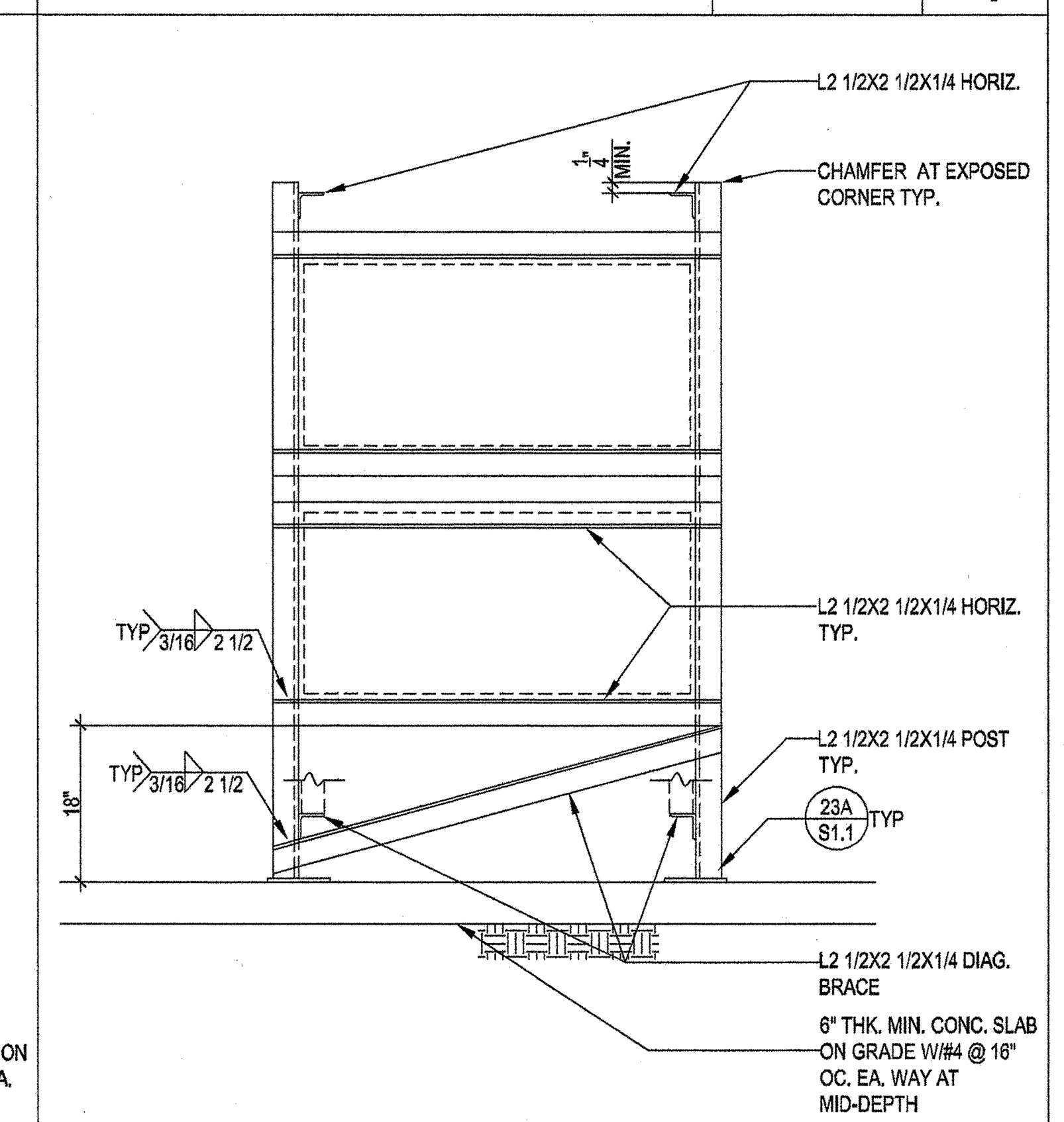

3/4"=1'-0" | 10

LUMBER

1. ALL STRUCTURAL LUMBER SHALL BE GRADED IN ACCORDANCE WITH THE "GRADING AND DRESSING RULES NO. 16 OF THE WEST COAST LUMBERMAN'S ASSOCIATION."
2. ALL WOOD BEARING ON CONCRETE WITHIN 4'-0" FROM GRADE SHALL BE PRESSURE TREATED DOUGLAS FIR.
3. ALL BOLT HOLES SHALL BE DRILLED 1/32" TO 1/16" OVERSIZED (11.1.2.2, '05 NDS)
4. STRUCTURAL MEMBERS SHALL NOT BE CUT FOR PIPES, ETC. UNLESS SPECIFICALLY NOTED OR DETAILED.
5. PROVIDE 2X SOLID BLOCKING BETWEEN JOISTS OR RAFTERS TO ALL SUPPORTS.
6. PROVIDE SOLID BLOCKING OR CROSS-BRIDGING AT 8'-0" O.C. MAXIMUM FOR ALL FLOOR JOISTS OVER (4") DEEP AND AT 10'0" O.C. MAXIMUM FOR ALL RAFTERS OVER (8") DEEP. LOCATE FIRST BLOCK AT MIDSPAN
7. ALL STRUCTURAL PLYWOOD SHALL BE STRUCTURAL GRADE WITH EXTERIOR GLUE CONFORMING TO PS 1-09.
8. IN HORIZONTAL PLYWOOD SHEATHING, NO PANEL SHALL BE LESS THAN 24 INCHES WIDE. IN VERTICAL PLYWOOD SHEATHING, NO PANEL SHALL BE LESS THAN 12 INCHES WIDE.
9. ALL BOLTS BEARING ON WOOD SHALL HAVE STANDARD CUT WASHERS UNDER HEAD AND NUT, UNLESS NOTED OTHERWISE.
10. ALL JOIST HANGERS SHALL BE "SIMPSON" OR APPROVED EQUAL. AND SHALL MATCH SUPPORTED MEMBER SIZE UNLESS OTHERWISE SHOWN ON DRAWINGS. THEY SHALL BE INSTALLED FOR MAXIMUM RATED LOADS.
11. PROVIDE 2X FIRE STOPS AT ALL INTERSECTIONS OF STUD WALLS AND/OR STUD PARTITIONS AT FLOOR, CEILING AND ROOF. FIRE STOPS AT A MAXIMUM SPACING OF 8'0" O.C. IN THE VERTICAL DIRECTION, PROVIDE 2X FIRE STOPS IN ALL FURRED SPACES, VERTICAL AND HORIZONTAL.
12. ALL STRUCTURAL LUMBER SHALL BE DOUGLAS FIR OF THE FOLLOWING GRADES UNLESS OTHERWISE NOTED:
    STUD, PLATES AND BLOCKING....................NO. 1
    BEAMS AND STRINGERS....................DENSE NO. 1
    POSTS AND MULLIONS....................SEL STRUCT
    JOISTS AND RAFTERS (2X6 AND LARGER)....................NO. 1
    (2X4 AND 3X4)....................NO. 1
    BEAMS (LESS THAN 4" IN WIDTH)....................NO. 1
    PLANK AND DECKING....................SEL COM
    SILL PLATES....................PRESSURE TREATED NO.1 OR BETTER
13. NAILING FOR 5/8" AND 3/4" PLYWOOD SHALL BE 10d PLYWOOD NAILS, 2-1/2" X #9 GAGE X 9/32" DIAMETER HEAD BARBED SHANK, EQUIVALENT.
14. MACHINE APPLIED NAILING: USE OF MACHINE NAILING IS SUBJECT TO A SATISFACTORY JOBSITE DEMONSTRATION FOR EACH PROJECT AND THE APPROVAL BY THE PROJECT ARCHITECT OR STRUCTURAL ENGINEER AND THE DIVISION OF THE STATE ARCHITECT. THE APPROVAL IS SUBJECT TO CONTINUED SATISFACTORY PERFORMANCE. MACHINE NAILING WILL NOT BE APPROVED IN 5/16" PLYWOOD. IF NAILHEADS PENETRATE THE OUTER PLY MORE THAN WOULD BE NORMAL FOR A HAND HAMMER OR IF MINIMUM ALLOWABLE EDGE DISTANCES ARE NOT MAINTAINED, THE PERFORMANCE WILL BE DEEMED UNSATISFACTORY.
15. ALL NAILS SHALL BE COMMON WIRE NAILS.
16. ALL NAILING SHALL COMPLY WITH TABLE 2304.9.1 OF THE 2013 EDITION OF THE C.B.C.
17. ALL LUMBER SHALL HAVE A MAXIMUM MOISTURE CONTENT OF 19 % (DRY) LUMBER
18. WHERE JOISTS ARE SUPPORTING MECHANICAL EQUIPMENT AND ARCHITECTURAL FEATURES, CONSULT MECHANICAL AND ARCHITECTURAL DRAWINGS FOR EQUIPMENT AND FEATURE LOADS.
19. PREDRILL HOLES AS NEEDED FOR ANY SIZE NAIL TO AVOID SPLITTING WOOD FRAMING MEMBERS.
20. NO SHOT PIN IS ALLOWED AT CURBS & EDGE OF SLABS
21. RETIGHTEN BOLTS BEFORE CLOSING-IN
22. EXTERIOR USE NAILS SHOULD BE CORROSIVE RESISTANCE

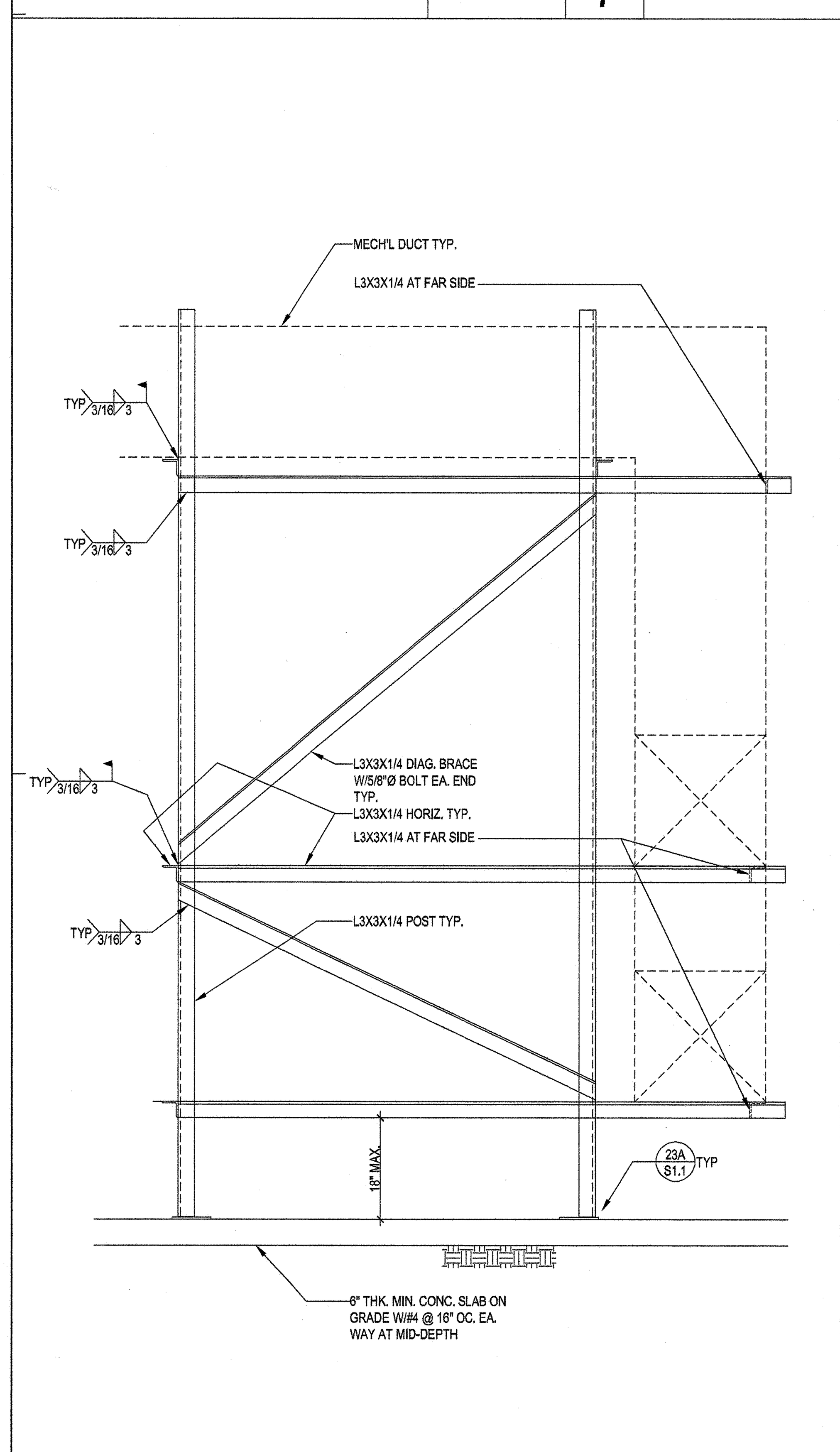

3/4"=1'-0" | 19

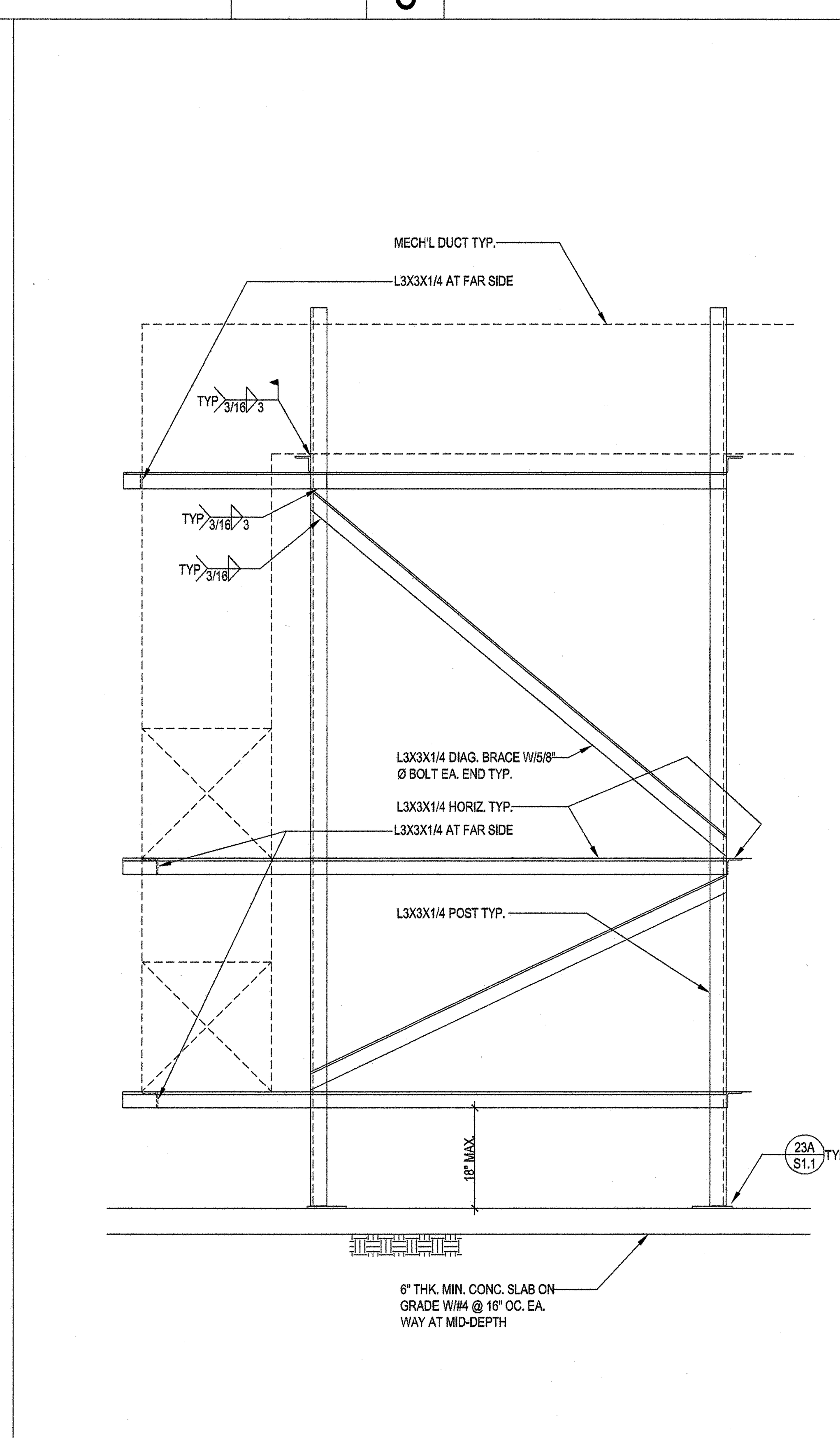

3/4"=1'-0" | 21

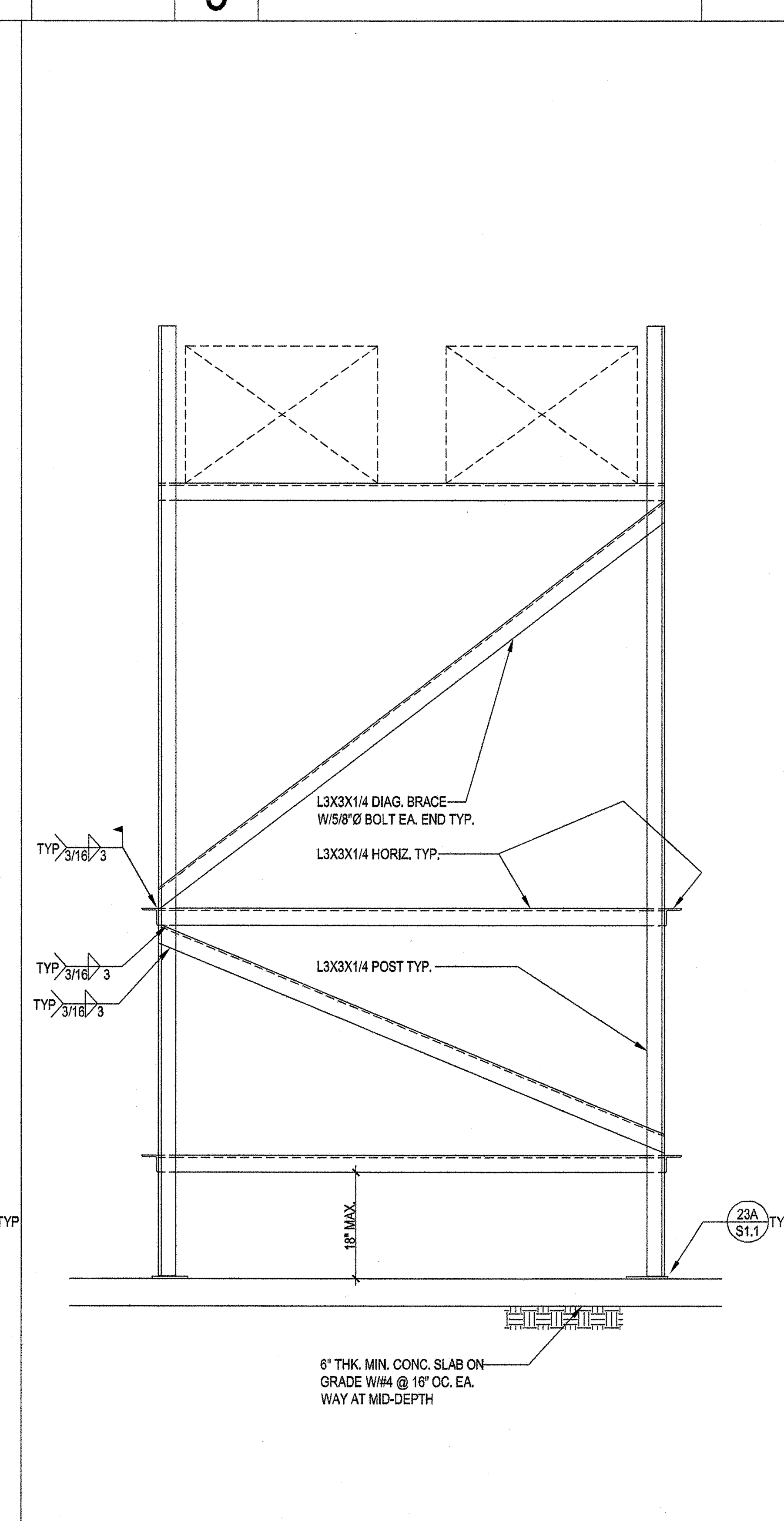

3/4"=1'-0" | 22

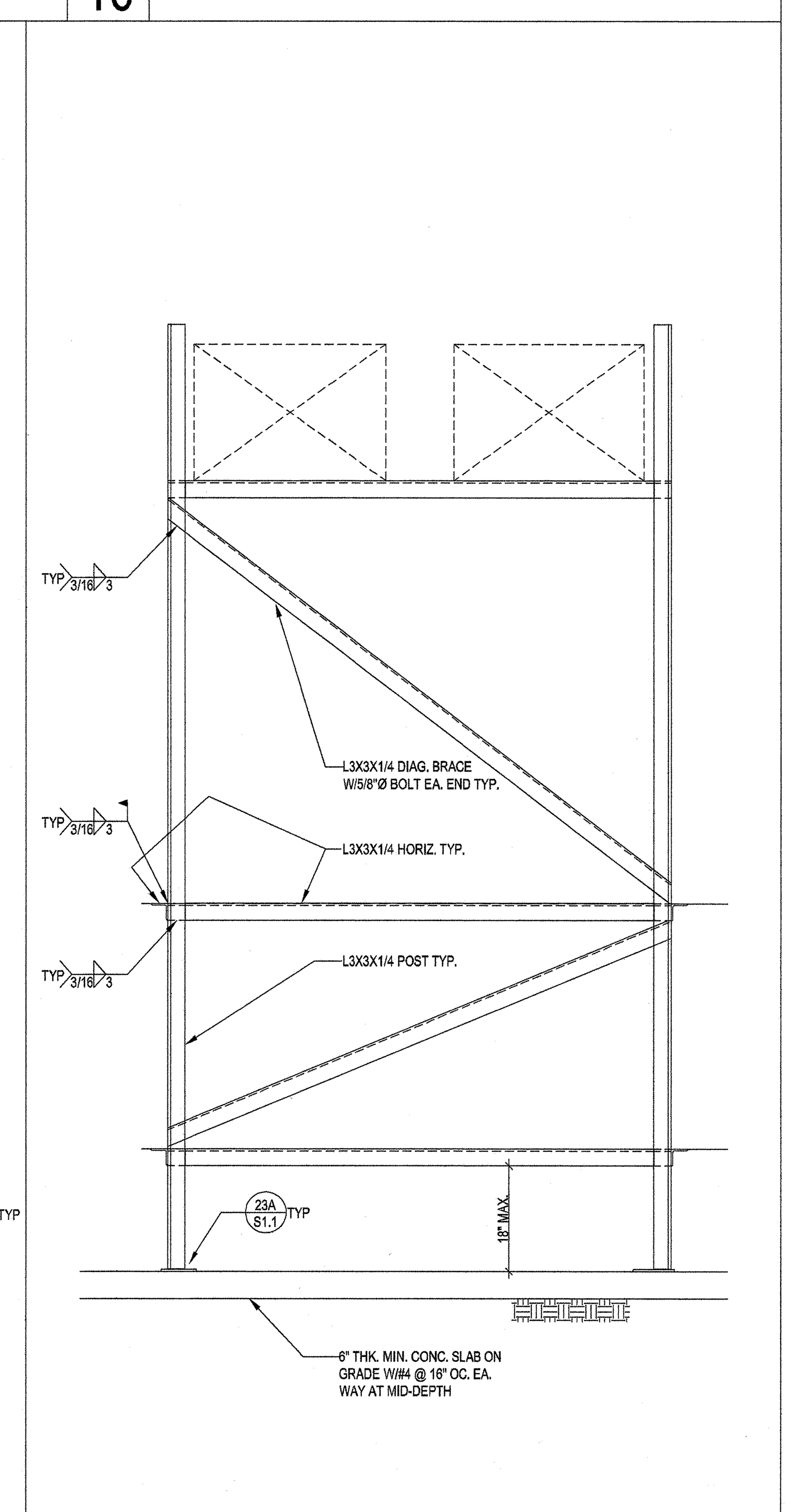

3/4"=1'-0" | 23

GENERAL

1. THE GENERAL CONTRACTOR SHALL VERIFY ALL DIMENSIONS AND SITE CONDITIONS BEFORE STARTING WORK. THE ARCHITECT SHALL BE NOTIFIED OF ANY DISCREPANCY BEFORE PROCEEDING WITH THE WORK.
2. DIMENSIONS SHALL TAKE PRECEDENCE OVER SCALES SHOWN ON DRAWINGS.
3. ALL WORK SHALL CONFORM TO THE MINIMUM STANDARDS OF THE 2013 EDITION OF THE CALIFORNIA BUILDING CODE AND TITLE 24 OF THE CALIFORNIA CODE OF REGULATIONS AND ANY OTHER REGULATIONS OVER ANY PORTION OF THE WORK, INCLUDING THE OCCUPATIONAL SAFETY AND HEALTH ADMINISTRATION, AND THOSE LISTED IN THESE NOTES AND SPECIFICATIONS.
4. SEE ARCHITECTURAL, ELECTRICAL, AND MECHANICAL DRAWINGS FOR PITS, TRENCHES, OPENINGS, DEPRESSIONS, ETC., NOT SHOWN ON THE STRUCTURAL DRAWINGS.
5. THE CONTRACT STRUCTURAL DRAWINGS AND SPECIFICATIONS REPRESENT THE FINISHED STRUCTURE. THEY DO NOT INDICATE THE METHOD OF CONSTRUCTION. THE CONTRACTOR SHALL PROVIDE ALL MEASURES NECESSARY TO PROTECT THE STRUCTURE DURING CONSTRUCTION. SUCH MEASURES SHALL INCLUDE, BUT NOT BE LIMITED TO BRACING, SHORING FOR LOADS DUE TO CONSTRUCTION EQUIPMENT, ETC. OBSERVATION VISITS TO THE SITE BY THE STRUCTURAL ENGINEER SHALL NOT INCLUDE THE INSPECTION OF THE ABOVE ITEMS.
6. CONTRACTOR SHALL INVESTIGATE SITE DURING CLEARING AND EARTHWORK OPERATIONS FOR FILLED EXCAVATIONS OR BURIED STRUCTURES SUCH AS CESSPOOLS, CISTERNS, FOUNDATIONS, ETC. IF ANY SUCH STRUCTURES ARE FOUND, STRUCTURAL AND GEOTECHNICAL ENGINEER SHALL BE NOTIFIED IMMEDIATELY.
7. CONSTRUCTION MATERIALS SHALL BE SPREAD OUT IF PLACED ON FRAMED FLOORS OR ROOF. LOAD SHALL NOT EXCEED THE DESIGN LIVE LOAD PER SQUARE FOOT. PROVIDE ADEQUATE SHORING AND OR BRACING WHERE STRUCTURE HAS NOT ATTAINED DESIGN STRENGTH.
8. DESIGN LOADS:

   WIND DESIGN CRITERIA:
   WIND SPEED.....Vult =110 mph (3S GUST)
   EXPOSURE C
   RISK CATEGORY : II
   GCpi + 0.18

   SEISMIC DESIGN:
   RISK CATEGORY = II
   Ie=1.00
   S_S=1.675, S_1=0.615
   SITE CLASS D
   S_{DS}=1.116, S_{D1}=0.615
   S_{MS}=1.675, S_{M1}= 0.923
   SEISMIC DESIGN CATEGORY= D
   ANALYSIS PROCEDURE = EQUIVALENT LATERAL FORCE PROCEDURE

CONCRETE

1. ALL CONCRETE SHALL CONFORM TO 2013 CBC, PART II (CCR).
2. CEMENT SHALL CONFORM TO A.S.T.M. (C-150) TYPE II/V.
3. ANCHOR BOLTS, DOWELS, INSERTS, ETC. SHALL BE SECURELY TIED IN PLACE PRIOR TO POURING CONCRETE.
4. CONCRETE SHALL BE CURED BY KEEPING CONTINUOUSLY WET FOR 10 DAYS OR BY AN APPROVED CURING COMPOUND.
5. REFER TO ARCHITECTURAL, MECHANICAL, ELECTRICAL AND PLUMBING DRAWINGS FOR MISCELLANEOUS ITEMS TO BE CAST INTO CONCRETE AND FOR FLOOR DEPRESSIONS, PITS, ETC.
6. MINIMUM CONCRETE COMPRESSIVE STRENGTHS AT 28 DAYS (MAX WATER/CEMENT RATIO = .45) WITH SLUMP =4" SHALL BE AS FOLLOWS:
   FOUNDATION....................3000 PSI (STONE)
   SLABS ON GRADE....................3000 PSI (STONE)
7. SLABS ON GRADE SHALL BE REINFORCED WITH #3 @ 16" O.C. EACH WAY UNLESS SPECIFICALLY NOTED.
8. ALL CONCRETE SHALL BE NORMAL WEIGHT CONCRETE EXCEPT AS NOTED.
9. CONCRETE PROPORTIONING SHALL BE BASED ON ACI 318-11 SECTION 5.3
10. 15% MAXIMUM FLY ASH MAY BE USE IN THE NORMAL WIEGHT CONCRETE MIX DESIGN. FLY ASH SHALL CONFORM TO ASTM C618 FOR CLASS N OR F.
11. ALL HEADED ANCHOR BOLTS SHALL CONFORM TO A.S.T.M. F1554 GR 36 OR A449 SPECIFICATION. ALL-THREAD RODS IN FOUNDATION SHALL CONFORM TO A.S.T.M. A36 SPECIFICATION.

REINFORCING STEEL

1. BAR REINFORCING SHALL CONFORM TO ASTM A-615 GRADE 60 DEFORMED FOR NO. 5 AND LARGER; NO. 4 AND SMALLER SHALL CONFORM TO GRADE 40.
2. WELDED WIRE FABRIC SHALL CONFORM TO ASTM A-185, FLAT SHEETS. KEEP REINFORCING AT MID-DEPTH OF SLAB-ON-GRADE.
3. DETAILS OF REINFORCEMENT SHALL BE IN ACCORDANCE WITH CHAPTER 7 OF AMERICAN CONCRETE INSTITUTE 315 UNLESS NOTED ON THIS DRAWING OR PER TITLE 24 CCR PART 2.
4. LAP BARS IN CONCRETE CONSTRUCTION SHALL BE IN ACCORDANCE WITH THE SCHEDULE GIVEN IN SHEET S1.0
5. LAPS OF WELDED FABRIC AT SPLICES SHALL NOT BE LESS THAN 8 INCHES.
6. REINFORCING STEEL DETAILING, BENDING AND PLACING SHALL BE IN ACCORDANCE WITH THE CONCRETE REINFORCING STEEL INSTITUTE "MANUAL OF STANDARD PRACTICE", LATEST EDITION.
7. ALL REINFORCING STEEL, ANCHOR BOLTS, DOWELS SHALL BE SECURELY TIED IN PLACE BEFORE PLACING CONCRETE.
8. SUBMIT REINFORCING SHOP DRAWINGS FOR REVIEW BY THE ARCHITECT BEFORE FABRICATION.
9. PROVIDE THE FOLLOWING MINIMUM CLEAR COVER OF CONCRETE OVER REINFORCING STEEL UNLESS OTHERWISE NOTED ON PLAN:

   ON EARTH SIDE WHEN PLACED AGAINST EARTH..........3"
   ON EARTH SIDE WHEN FORMED....................2"
   EXTERIOR WALL STEEL ABOVE GRADE....................2" (1 1/2" FOR #5 & SMALLER)
   INTERIOR WALL STEEL AND SUPPORTED SLABS..........3/4"
   TIED COLUMNS (STIRRUPS) ABOVE GRADE..........1-1/2"
   BEAMS (STIRRUPS) ABOVE GRADE..........1-1/2"
   WELDED WIRE FABRIC....................CENTER LINE OF SLAB

EXPANSION ANCHORS

EXPANSION ANCHOR SHALL BE OF TYPE HILTI KWIK BOLT TZ (ESR-1917)

TEST VALUES FOR HARDROCK OR LIGHTWEIGHT CONCRETE	
ANCHOR DIAM.	WEDGE ANCHOR TORQUE VALUE
inches	ft-lbs
3/8"Ø	25
1/2"Ø	40
5/8"Ø	60
3/4"Ø	110

NOTES

1. TEST INSTALLED ANCHORS PER SECTION 1916A.7
2. THE FOLLOWING CRITERIA APPLY FOR THE ACCEPTANCE OF INSTALLED ANCHORS:

A. TORQUE WRENCH METHOD: THE APPLICABLE TEST TORQUE MUST BE REACHED WITHIN THE FOLLOWING LIMITS:

I. WEDGE OR SLEEVE TYPE: ONE-HALF (1/2) TURN OF THE NUT.

II. ONE-QUARTER (1/4) TURN OF THE NUT FOR THE 3/8 IN. SLEEVE ANCHOR ONLY.

3. IF THE MANUFACTURER'S RECOMMENDED INSTALLATION TORQUE IS LESS THAN THE TEST TORQUE NOTED IN THE TABLE, THE MANUFACTURER'S RECOMMENDED INSTALLATION TORQUE SHOULD BE USED IN LIEU OF THE TABULATED VALUES.

WLC ARCHITECTS
CLIENT FOCUSED • PASSION DRIVEN
SOUTHERN CALIFORNIA
8163 ROCHESTER AVENUE, SUITE 100
RANCHO CUCAMONGA
CALIFORNIA 91730-0729
TEL: 909-987-0909
www.wlcarchitects.com

LONGFELOW ELEMENTARY SCHOOL HVAC REPLACEMENT

COMTON UNIFIED SCHOOL DISTRICT
1101 STANFORD AVE.
COMPTON, CA. 90220

LICENSED ARCHITECT MARK GRAHAM C-26046 03-31-19 STATE OF CALIFORNIA

REGISTERED PROFESSIONAL ENGINEER PETER TRAN No. 4628 Exp. 6-30-19 STRUCTURAL STATE OF CALIFORNIA

CONSULTANT
K.B. LEUNG & ASSOCIATES
STRUCTURAL ENGINEERS
9320 BASELINE ROAD, SUITE D
ALTA LOMA, CA 91701
(909) 944 - 0029 PHONE
(909) 944 - 7983 FAX

IDENTIFICATION STAMP
DIV. OF THE STATE ARCHITECT
OFFICE OF REGULATION SERVICES
APPL 03-118423
AC — FLS — SS EY
DATE MAR 0 6 2018
FILE: 19-23

NO	DATE	BY	DESCRIPTION
#	REVISIONS		

DRAWN: IDK	CHECKED: PT
DATE: 10/20/17	SCALE: AS NOTED
PROJECT NUMBER: 1723400	

GENERAL NOTES & DETAILS

DRAWING NUMBER: S1.0

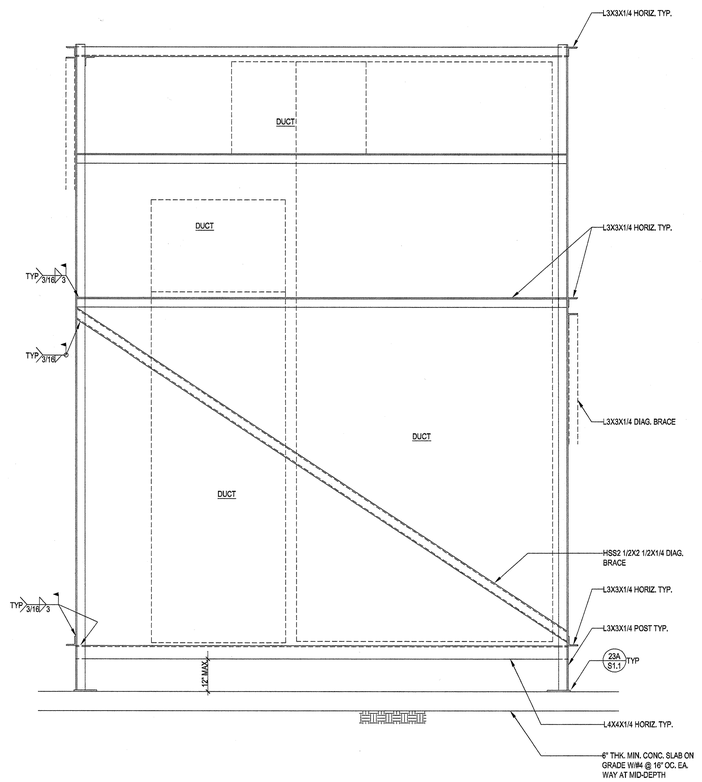

3/4"=1'-0" 8

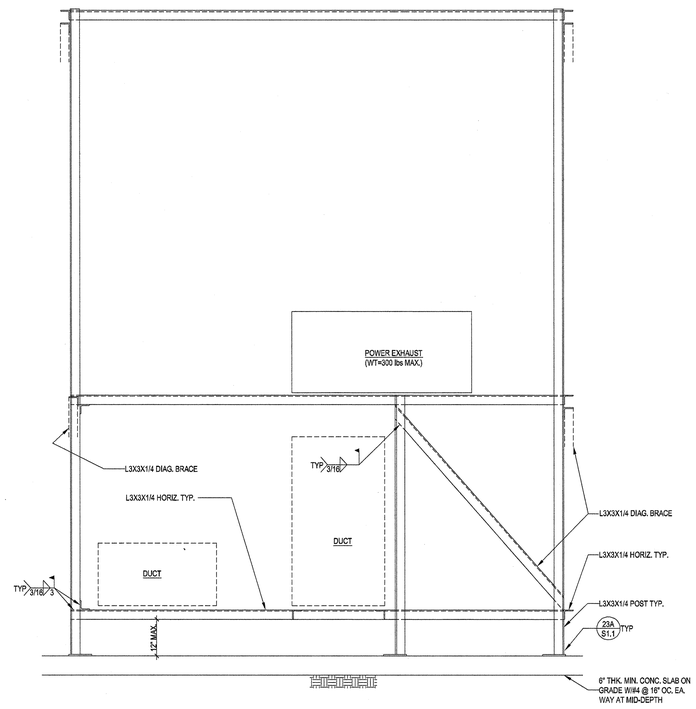

3/4"=1'-0" 10

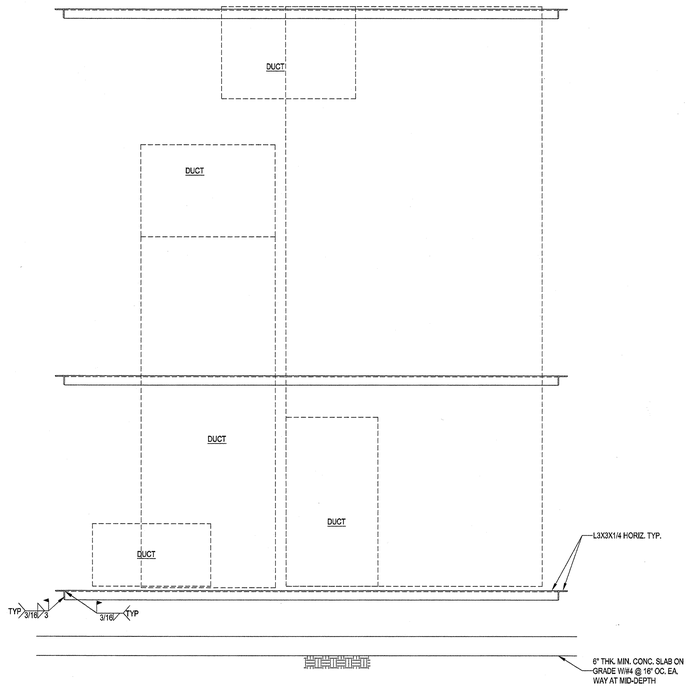

3/4"=1'-0" 12

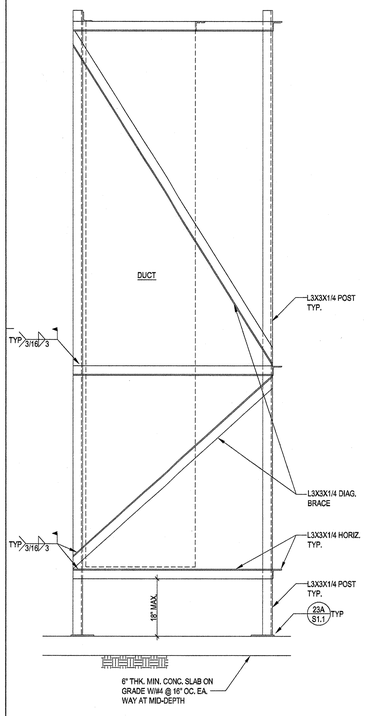

3/4"=1'-0" 19

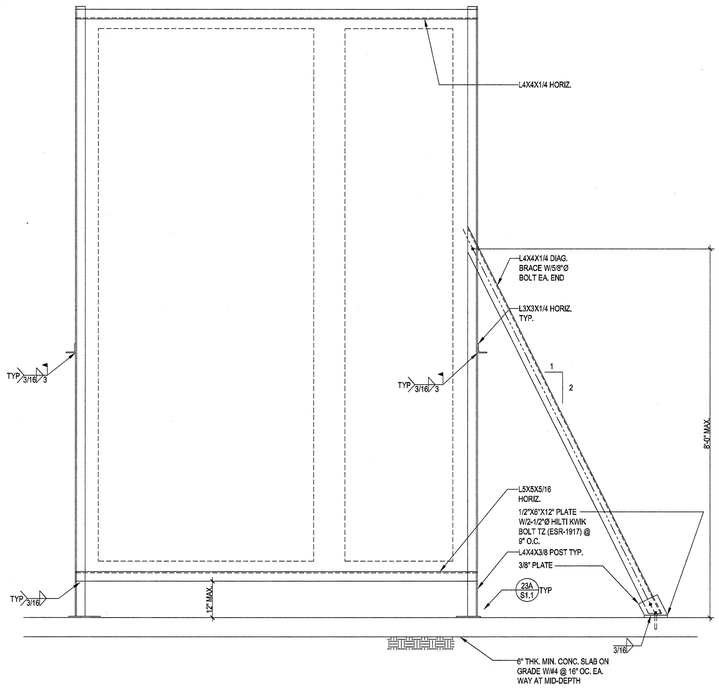

3/4"=1'-0" 21

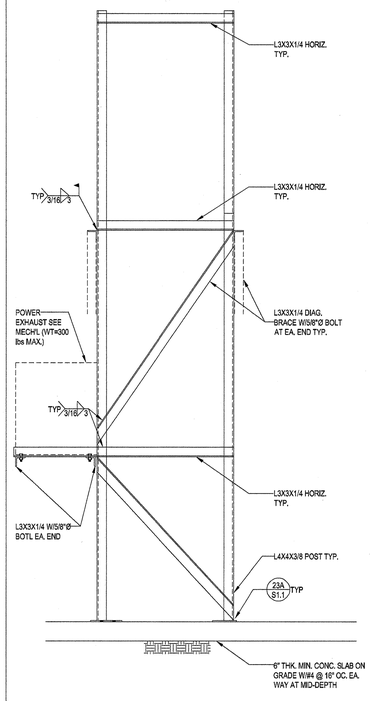

3/4"=1'-0" 22

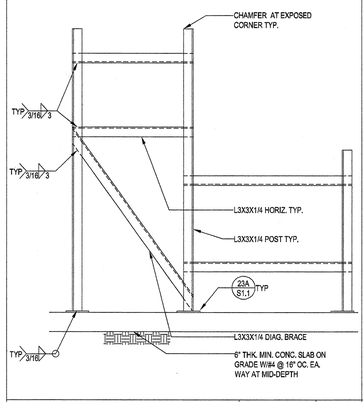

3/4"=1'-0" 17

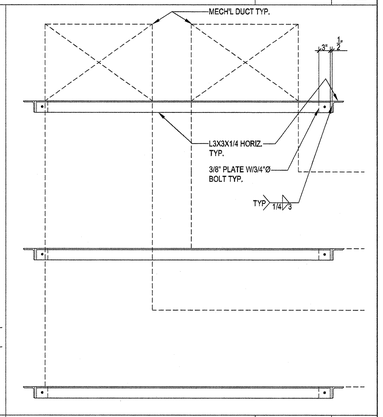

3/4"=1'-0" 18

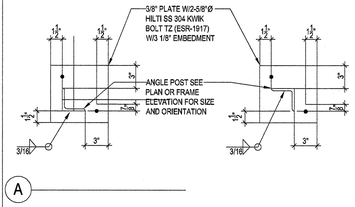

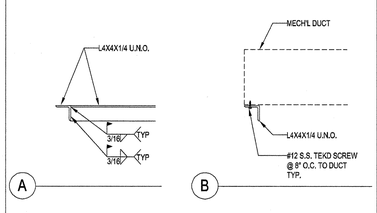

3/4"=1'-0" 23

3/4"=1'-0" 24

ARCHITECTS
WLC
CLIENT FOCUSED • PASSION DRIVEN

SOUTHERN CALIFORNIA
8163 ROCHESTER AVENUE, SUITE 100
RANCHO CUCAMONGA
CALIFORNIA 91730-0729

TEL: 909-987-0909

www.wlcarchitects.com

LONGFELLOW ELEMENTARY SCHOOL HVAC REPLACEMENT

COMTON UNIFIED SCHOOL
1101 BISSELL AVE.
COMPTON, CA. 90220

LICENSED ARCHITECT
MARK GRAHAM
C-26046
03-31-19
STATE OF CALIFORNIA

REGISTERED PROFESSIONAL ENGINEER
PETER TRAN
No. 4628
Exp. 6-30-19
STRUCTURAL
STATE OF CALIFORNIA

CONSULTANT
K.B. LEUNG & ASSOCIATES
STRUCTURAL ENGINEERS
9320 BASELINE ROAD, SUITE D
ALTA LOMA, CA. 91701
(909) 944 - 0029 PHONE
(909) 944 - 7883 FAX

IDENTIFICATION STAMP
DIV. OF THE STATE ARCHITECT
OFFICE OF REGULATION SERVICES
APPL 03-118423
AC. — FLS — SS EY
DATE MAR 0 8 2018
FILE: 19-23

NO	DATE	BY	DESCRIPTION
			REVISIONS

DRAWN: IDK	CHECKED: PT
DATE: 10/20/17	SCALE: AS NOTED
PROJECT NUMBER: 1723400	

DETAILS

DRAWING NUMBER: S1.1

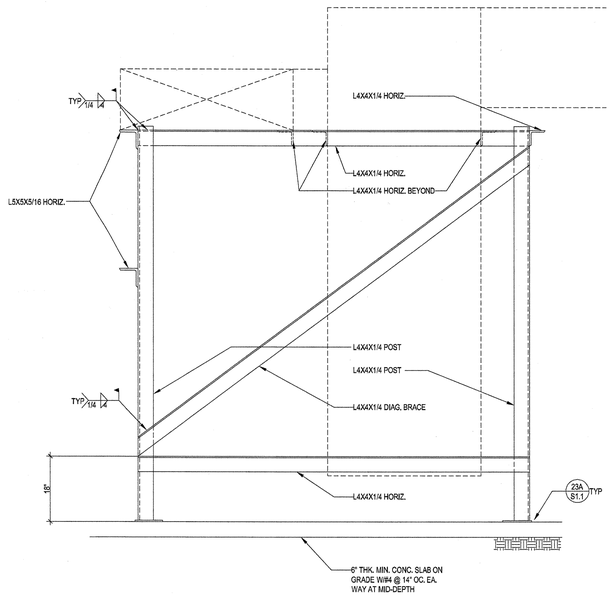

3/4"=1'-0" 8

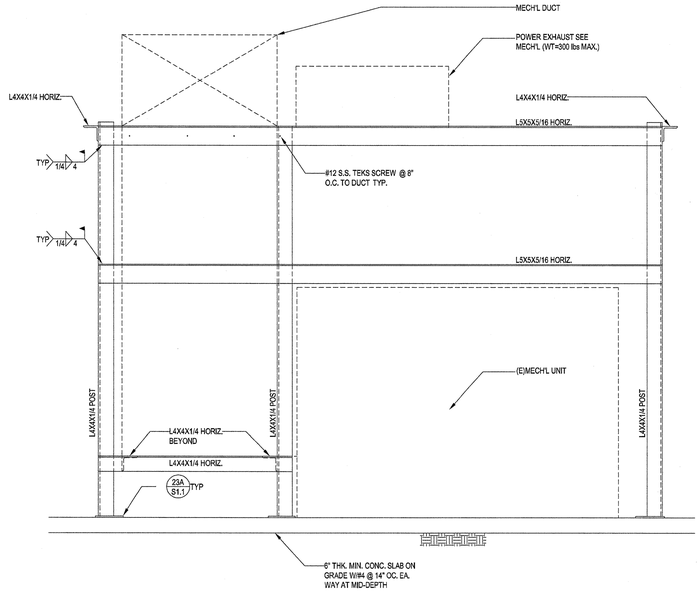

3/4"=1'-0" 10

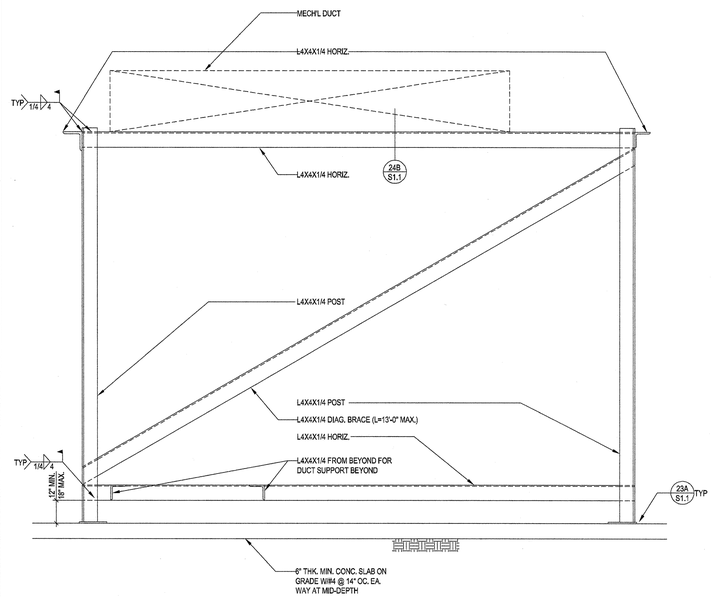

3/4"=1'-0" 12

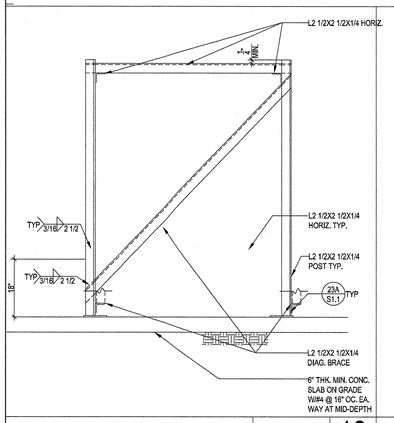

3/4"=1'-0" 13

3/4"=1'-0" 17

3/4"=1'-0" 18

3/4"=1'-0" 21

3/4"=1'-0" 19

3/4"=1'-0" 21

3/4"=1'-0" 22

3/4"=1'-0" 23

3/4"=1'-0" 24

WLC ARCHITECTS
CLIENT FOCUSED • PASSION DRIVEN

SOUTHERN CALIFORNIA
8163 ROCHESTER AVENUE, SUITE 100
RANCHO CUCAMONGA
CALIFORNIA 91730-0729
TEL: 909-987-0909
www.wlcarchitects.com

LONGFELOW ELEMENTARY SCHOOL HVAC REPLACEMENT

COMTON UNIFIED SCHOOL
1101 DISTRICT AVE.
COMPTON, CA. 90220

LICENSED ARCHITECT MARK GRAHAM C-26046 03-31-19 STATE OF CALIFORNIA

REGISTERED PROFESSIONAL ENGINEER PETER TRAN No. 4628 Exp. 6-30-19 STRUCTURAL STATE OF CALIFORNIA

CONSULTANT
K.B. LEUNG & ASSOCIATES
STRUCTURAL ENGINEERS
9320 BASELINE ROAD, SUITE D
ALTA LOMA, CA 91701
(909) 944 - 0029 PHONE
(909) 944 - 7983 FAX

IDENTIFICATION STAMP
DIV. OF THE STATE ARCHITECT
OFFICE OF REGULATION SERVICES
APPL 03-118423
AC — FLS — SS EY
DATE MAR 0 6 2018
FILE: 19-23

NO	DATE	BY	DESCRIPTION
#	REVISIONS		

DRAWN: IDK	CHECKED: PT
DATE: 10/20/17	SCALE: AS NOTED
PROJECT NUMBER: 1723400	

DETAILS

DRAWING NUMBER: S1.2

NOTES:

1. ALL DUCT SUPPORTED BY STEEL ANGLE SHALL BE FASTENED BY #12-24 TEKS SCREW (ESR-1976) @ 12" MAX. O.C. FROM STEEL ANGLE INTO DUCT.
2. PROVIDE #12-24 TEKS SCREW (ESR-1967) @ 8" MAX. O.C. TO ALL POWER EXHAUST.

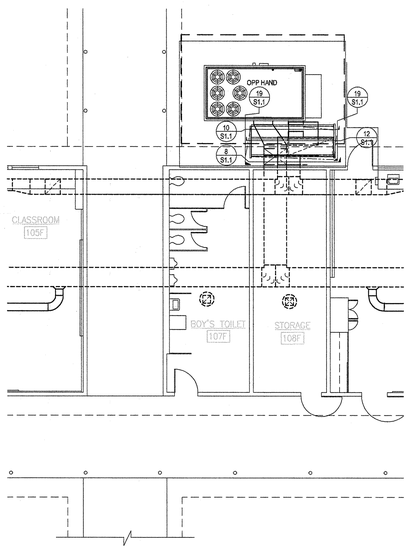

BLD'G C

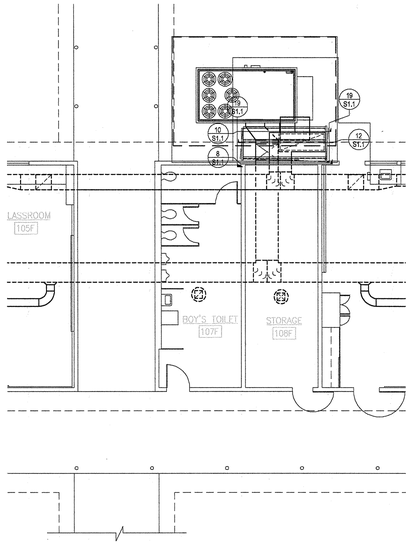

BLD'G F

PARTIAL BUILDING C & F FLOOR PLAN

1/8"=1'-0" | 1

NOTES:

1. ALL DUCT SUPPORTED BY STEEL ANGLE SHALL BE FASTENED BY #12-24 TEKS SCREW (ESR-1976) @ 12" MAX. O.C. FROM STEEL ANGLE INTO DUCT.
2. PROVIDE #12-24 TEKS SCREW (ESR-1967) @ 8" MAX. O.C. TO ALL POWER EXHAUST.

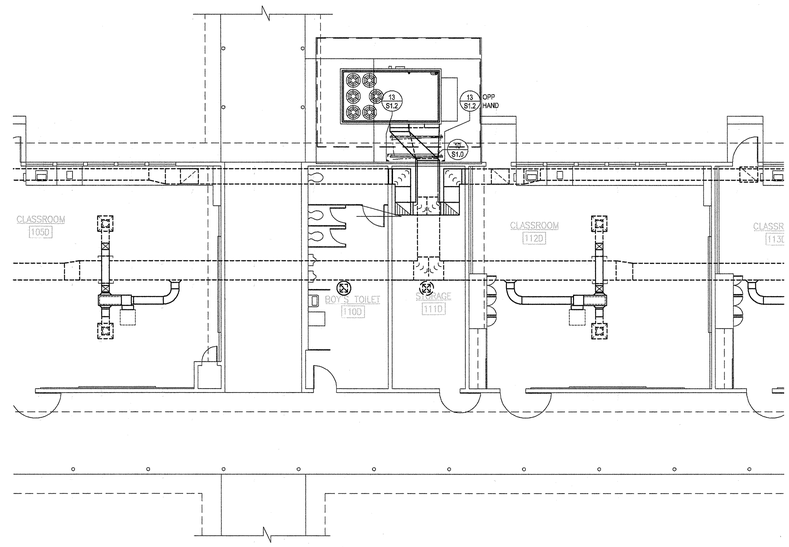

PARTIAL BUILDING D FLOOR PLAN

1/8"=1'-0" | 2

NOTES:

1. ALL DUCT SUPPORTED BY STEEL ANGLE SHALL BE FASTENED BY #12-24 TEKS SCREW (ESR-1976) @ 12" MAX. O.C. FROM STEEL ANGLE INTO DUCT.
2. PROVIDE #12-24 TEKS SCREW (ESR-1967) @ 8" MAX. O.C. TO ALL POWER EXHAUST.

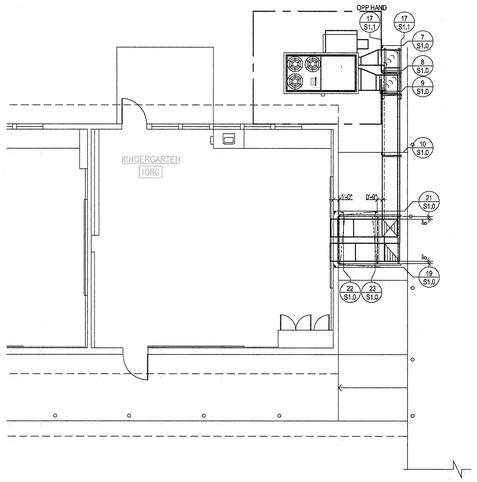

PARTIAL BUILDING G FLOOR PLAN

1/8"=1'-0" | 3

NOTES:

1. ALL DUCT SUPPORTED BY STEEL ANGLE SHALL BE FASTENED BY #12-24 TEKS SCREW (ESR-1976) @ 12" MAX. O.C. FROM STEEL ANGLE INTO DUCT.
2. PROVIDE #12-24 TEKS SCREW (ESR-1967) @ 8" MAX. O.C. TO ALL POWER EXHAUST.

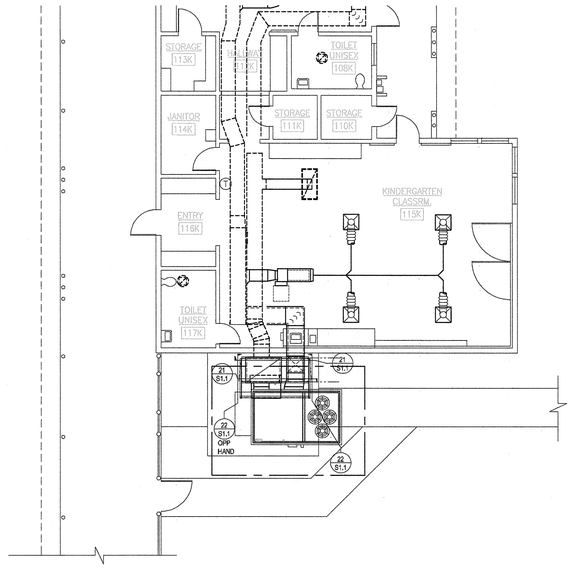

PARTIAL BUILDING K FLOOR PLAN

1/8"=1'-0" | 4

NOTES:

1. ALL DUCT SUPPORTED BY STEEL ANGLE SHALL BE FASTENED BY #12-24 TEKS SCREW (ESR-1976) @ 12" MAX. O.C. FROM STEEL ANGLE INTO DUCT.
2. PROVIDE #12-24 TEKS SCREW (ESR-1967) @ 8" MAX. O.C. TO ALL POWER EXHAUST.

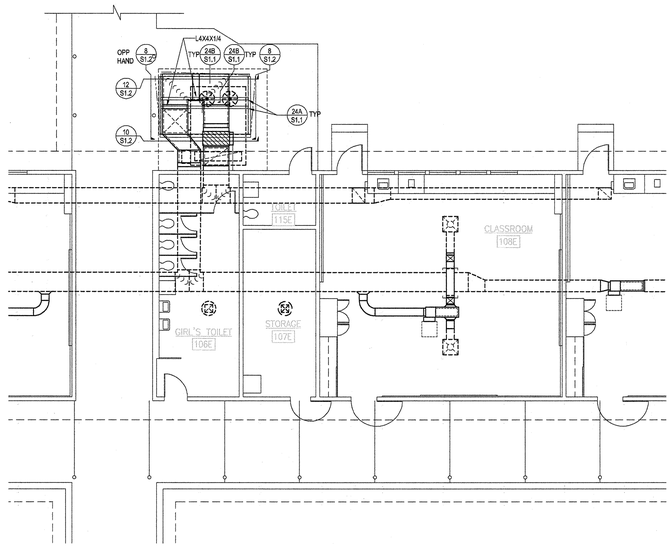

PARTIAL BUILDING E FLOOR PLAN

1/8"=1'-0" | 5

ARCHITECTS
WLC
CLIENT FOCUSED • PASSION DRIVEN

SOUTHERN CALIFORNIA
8163 ROCHESTER AVENUE, SUITE 100
RANCHO CUCAMONGA
CALIFORNIA 91730-0729

TEL: 909-987-0909

www.wlcarchitects.com

LONGFELOW ELEMENTARY SCHOOL HVAC REPLACEMENT

COMTON UNIFIED SCHOOL DISTRICT
1101 BULLIS AVE.
COMPTON, CA. 90220

LICENSED ARCHITECT
MARK GRAHAM
C-26046
03-31-19
STATE OF CALIFORNIA

REGISTERED PROFESSIONAL ENGINEER
PETER TRAN
No. 4628
Exp. 6-30-19
STRUCTURAL
STATE OF CALIFORNIA

CONSULTANT
K.B. LEUNG & ASSOCIATES
STRUCTURAL ENGINEERS
9330 BASELINE ROAD, SUITE D
ALTA LOMA, CA 91701
(909) 944 - 0029 PHONE
(909) 944 - 7983 FAX

IDENTIFICATION STAMP
DIV. OF THE STATE ARCHITECT
OFFICE OF REGULATION SERVICES
APPL 03-118423
AC ___ FLS ___ SS BY
DATE AUG 0 6 2018

FILE: 19-23

NO	DATE	BY	DESCRIPTION
1			REVISIONS

DRAWN: IDK	CHECKED: PT
DATE: 10/20/17	SCALE: AS NOTED
PROJECT NUMBER: 1723400	

BLD'G C, D, F, G, K
PARTIAL FLOOR PLAN

DRAWING NUMBER: S2.1

GENERAL NOTES

----- GENERAL NOTES -----

1. ENTIRE INSTALLATION SHALL CONFORM TO THE REQUIREMENTS OF THE 2016 CALIFORNIA MECHANICAL CODE, 2016 CALIFORNIA BUILDING CODE, AND ALL OTHER APPLICABLE CODES AND REGULATIONS, INCLUDING 2016 BUILDING ENERGY EFFICIENCY STANDARDS DIVISION T-24.

2. 2016 CALIFORNIA GREEN BUILDING STANDARDS (CALGREEN) CODE INCLUDING THE APPLICABLE MANDATORY MEASURES:

   - 5.201.1 CALIFORNIA ENERGY CODE. FOR THE PURPOSES OF MANDATORY ENERGY EFFICIENCY STANDARDS IN THIS CODE, THE CALIFORNIA ENERGY COMMISSION WILL CONTINUE TO ADOPT MANDATORY STANDARDS.
   - 5.504.3: COVERING OF DUCT OPENINGS AND PROTECTION OF MECHANICAL EQUIPMENT DURING CONSTRUCTION. AT THE TIME OF ROUGH INSTALLATION AND DURING STORAGE ON THE CONSTRUCTION SITE UNTIL FINAL STARTUP OF THE HEATING, COOLING AND VENTILATING EQUIPMENT, ALL DUCT AND OTHER RELATED AIR DISTRIBUTION COMPONENT OPENINGS SHALL BE COVERED WITH TAPE, PLASTIC, SHEET METAL OR OTHER METHODS ACCEPTABLE TO THE ENFORCING AGENCY TO REDUCE THE AMOUNT OF DUST, WATER AND DEBRIS WHICH MAY ENTER THE SYSTEM.
   - 5.504.5.3.1 FILTERS. IN MECHANICALLY VENTILATED BUILDINGS, PROVIDE REGULARLY OCCUPIED AREAS OF THE BUILDING WITH AIR FILTRATION MEDIA FOR OUTSIDE AND RETURN AIR PRIOR TO OCCUPANCY THAT PROVIDES AT LEAST A MINIMUM EFFICIENCY REPORTING VALUE (MERV) OF 8. MERV 8 FILTERS SHALL BE INSTALLED PRIOR TO OCCUPANCY AND RECOMMENDATIONS FOR MAINTENANCE WITH FILTERS OF THE SAME VALUE SHALL BE INCLUDED IN THE OPERATION AND MAINTENANCE MANUAL. EXCEPTIONS:
     - a. AN ASHRAE 10-PERCENT TO 30-PERCENT EFFICIENCY FILTER SHALL BE PERMITTED FOR AN HVAC UNIT MEETING THE 2016 CALIFORNIA ENERGY CODE HAVING 60,000 BTU/H OR LESS CAPACITY PER FAN COIL, IF THE ENERGY USE OF THE AIR DELIVERY SYSTEM IS 0.4 W/CFM OR LESS AT THE DESIGN AIR FLOW.
     - b. EXISTING MECHANICAL EQUIPMENT.
   - 5.506.1 OUTSIDE AIR DELIVERY. FOR MECHANICALLY OR NATURALLY VENTILATED SPACES IN BUILDINGS, MEET THE MINIMUM REQUIREMENTS OF SECTION 121 (REQUIREMENTS FOR VENTILATION) OF THE 2016 CALIFORNIA ENERGY CODE, OR THE APPLICABLE LOCAL CODE, WHICHEVER IS MORE STRINGENT, AND DIVISION 1, CHAPTER 4 OF CCR, TITLE 8.
   - 5.508.1 OZONE DEPLETION AND GREENHOUSE GAS REDUCTIONS. INSTALL HVAC AND REFRIGERATION AND FIRE SUPPRESSION EQUIPMENT SHALL COMPLY WITH 5.508.1.1 AND 5.508.1.2.
   - 5.508.1.1 CHLOROFLUOROCARBONS (CFCS). INSTALL HVAC, REFRIGERATION AND FIRE SUPPRESSION EQUIPMENT THAT DO NOT CONTAIN CFCS.
   - 5.508.1.2 HALONS. INSTALL HVAC, REFRIGERATION AND FIRE SUPPRESSION EQUIPMENT THAT DO NOT CONTAIN HALONS.
   - ADHESIVES, SEALANTS AND CAULKS SHALL MEET CALGREEN REQUIREMENTS.
   - INSTALLER AND SPECIAL INSPECTORS SHALL MEET ALL QUALIFICATIONS LISTED IN SECTION 702 OF THE 2016 CALIFORNIA GREEN BUILDING STANDARDS CODE.

3. COORDINATE ENTIRE INSTALLATION OF THE HVAC SYSTEM WITH THE WORK OF ALL OTHER TRADES PRIOR TO ANY FABRICATION OR INSTALLATION. PROVIDE ALL FITTINGS, OFFSETS, AND TRANSITIONS AS REQUIRED FOR A COMPLETE WORKABLE INSTALLATION. THE MECHANICAL CONTRACTOR SHALL BE RESPONSIBLE TO COORDINATE ITEMS TO BE PROVIDED BY OTHER TRADES WHERE MENTIONED IN THE CONTRACT DOCUMENTS PRIOR TO BID – NO EXCEPTIONS.
4. COORDINATE THE LOCATIONS OF ALL CEILING DIFFUSERS, REGISTERS, AND GRILLES WITH THE ARCHITECTURAL REFLECTIVE CEILING PLAN, ELECTRICAL LIGHTING LAYOUT AND ARCHITECTURAL ROOM ELEVATIONS. THE ARCHITECT AND ENGINEER SHALL BE IMMEDIATELY NOTIFIED OF ANY CONFLICTS PRIOR TO FABRICATION AND INSTALLATION.
5. CONTRACTOR SHALL NOTIFY OWNER AND ENGINEER OF CONSTRUCTION PHASING PRIOR TO START OF CONSTRUCTION, REMOVAL, AND/OR REPLACEMENT OF ANY EQUIPMENT. CONTRACTOR SHALL RECEIVE PERMISSION IN WRITING PRIOR TO THE START OF ANY WORK DURING ANY PHASE FOR WORK SHOWN HEREIN. IT SHALL BE THE RESPONSIBILITY OF THE CONTRACTOR TO CONDUCT WORK AND ARRANGE HIS WORK IN A MANNER THAT WILL CAUSE MINIMAL INTERFERENCE WITH DAILY FUNCTIONS WITHIN THE FACILITY. ANY EXPECTED DOWNTIME SHALL BE COORDINATED WITH THE OWNER.
6. ALL EQUIPMENT, DUCTS, PIPING, AND OTHER DEVICES AND MATERIALS INSTALLED OUTSIDE OF THE BUILDING OR OTHERWISE EXPOSED TO THE WEATHER SHALL BE COMPLETELY WEATHER-PROOFED AND PAINTED TO MATCH, COORDINATE WITH ARCHITECT PRIOR TO PAINTING.
7. THE OWNER ACKNOWLEDGES THAT THE DESIGN PROFESSIONAL'S PLANS ARE INSTRUMENTS OF PROFESSIONAL SERVICE. NEVERTHELESS, THE PLANS PREPARED UNDER THIS AGREEMENT SHALL BECOME THE PROPERTY OF THE OWNER UPON COMPLETION OF THE WORK. THE OWNER AGREES TO HOLD HARMLESS AND INDEMNIFY THE DESIGN PROFESSIONAL AGAINST ALL DAMAGES, CLAIMS AND LOSSES, INCLUDING DEFENSE COSTS, ARISING OUT OF ANY RESCUE OF THE PLANS WITHOUT THE WRITTEN AUTHORIZATION OF THE DESIGN PROFESSIONAL.
8. ALL DIMENSIONS SHOWN ON THESE PLANS ARE APPROXIMATE AND MUST BE CONFIRMED ON SITE.
9. PRIOR TO OCCUPANCY, THE ENTIRE H.V.A.C. SYSTEMS SHALL BE BALANCED IN ACCORDANCE WITH (AABC) ASSOCIATED AIR BALANCE COUNCIL STANDARDS BY AN INDEPENDENT AIR BALANCE CONTRACTOR. CERTIFICATION SHALL BE PROVIDED BY THE CONTRACTOR FOR AIR AND HYDRONIC AS APPLICABLE. SYSTEMS SHALL BE BALANCED AS INDICATED ON PLANS INCLUDING FRESH AIR VENTILATION. WHERE THERE IS A CONFLICT WITH THE MECHANICAL PLANS, THE AIR BALANCE CONTRACTOR SHALL NOTIFY THE ENGINEER PRIOR TO BALANCING OF SYSTEM. IF NOT THE AIR BALANCE CONTRACTOR SHALL BEAR ALL COSTS INCURRED FOR WORK THAT MUST BE RE-BALANCED DUE TO CONFLICTS ON CONTRACT DOCUMENTS. CONTRACTOR SHALL PROVIDE THREE COPIES OF THE AIR BALANCE REPORT TO THE ENGINEER FOR APPROVAL.
10. FOR INACCESSIBLE AREAS THE CONTRACTOR SHALL PROVIDE ACCESS PANELS FOR ALL DAMPERS, EQUIPMENT, SMOKE DETECTORS, AND CONTROL DEVICES. THESE PANELS SHALL MATCH THE RATING OF THE WALL AND/OR CEILING THAT THEY ARE LOCATED IN. MINIMUM ACCESS PANEL SIZES SHALL BE AS FOLLOWS:

    1) HAND ACCESS: 12"x12"

    2) BODY ACCESS: 30"x30" MIN. WHERE A LARGER ACCESS SIZE IS REQUIRED DUE TO INSTALLATION CONSTRAINTS, THE CONTRACTOR SHALL DO SO AT NO ADDITIONAL COST AND SHALL NOTIFY THE ARCHITECT AND ENGINEER OF DEVIATIONS PRIOR TO INSTALLATION.
11. COORDINATE THE LOCATION OF ALL ROOF OPENINGS AND THE LOCATION OF ALL ROOF MOUNTED EQUIPMENT WITH THE STRUCTURAL AND ARCHITECTURAL PLANS PRIOR TO ANY INSTALLATION.
12. PLATFORMS, CURBS, AND FLASHINGS FOR MECHANICAL EQUIPMENT SHALL BE AS INDICATED ON THE STRUCTURAL AND ARCHITECTURAL PLANS, UNLESS NOTED OTHERWISE. WHERE THERE IS A CONFLICT WITH THE MECHANICAL PLANS, THE CONTRACTOR SHALL NOTIFY THE ARCHITECT AND ENGINEER PRIOR TO FABRICATION AND INSTALLATION.
13. ALL EQUIPMENT, ACCESSORIES, AND RELATED PIPING SHALL BE INSTALLED IN STRICT ACCORDANCE WITH THE EQUIPMENT MANUFACTURER'S RECOMMENDATIONS. PROVIDE ALL FITTINGS, TRANSITIONS, DAMPERS, VALVES, AND OTHER DEVICES REQUIRED FOR A COMPLETE WORKABLE INSTALLATION.
14. MAINTENANCE LABEL SHALL BE AFFIXED TO ALL MECHANICAL EQUIPMENT AND A MAINTENANCE MANUAL SHALL BE PROVIDED FOR THE OWNER'S USE.
15. PROVIDE MERV 13 EFFICIENCY THROWAWAY FILTERS FOR ALL AIR CONDITIONING UNITS. SEE EQUIPMENT SCHEDULE AND SPECIFICATIONS FOR TYPE. SIZES SHALL BE AS RECOMMENDED BY THE MANUFACTURER, UNLESS OTHERWISE SPECIFIED.
16. AIR FILTERS SHALL BE STATE FIRE MARSHALL APPROVED AND LISTED. PREFORMED FILTERS HAVING COMBUSTIBLE FRAMING SHALL BE TESTED AS A COMPLETE ASSEMBLY. AIR FILTERS SHALL BE ACCESSIBLE FOR CLEANING OR REPLACEMENT.
17. ALL EQUIPMENT WITH MOVING PARTS SHALL BE PROVIDED WITH FLEXIBLE DUCT AND PIPE CONNECTIONS.
18. ALL EQUIPMENT SHALL BE LABELED AS TO THE SPACE IT SERVES.
19. ALL HVAC EQUIPMENT SHALL BE CERTIFIED BY THE CALIFORNIA ENERGY COMMISSION TO COMPLY WITH LATEST EFFICIENCY STANDARDS.
20. PROVIDE MANUAL VOLUME DAMPERS AND BACKDRAFT DAMPERS FOR FRESH AIR INTAKES ON ALL AIR HANDLING EQUIPMENT AND EXHAUST FANS SERVING CONDITIONED SPACES. EXCEPTION: EQUIPMENT WITH FACTORY ECONOMIZERS. DAMPERS SITUATED ON THE ROOF SHALL BE SECURED AFTER BALANCING, TO AVOID THE POSSIBILITY OF ADJUSTMENT.
21. ALL AIR HANDLING EQUIPMENT SERVING CONDITIONED SPACES SHALL PROVIDE CONTINUOUS FRESH AIR TO SPACES IN OCCUPIED MODE.
22. CONTRACTOR SHALL VERIFY ALL CLEARANCES AND AVAILABLE SPACE FOR DUCTWORK PRIOR TO ORDERING AND/OR FABRICATING MATERIAL.
23. CONTRACTOR TO SUBMIT ALL EQUIPMENT, DUCTWORK, AIR DISTRIBUTION DEVICES, AND OTHER ACCESSORIES TO THE ENGINEER FOR APPROVAL PRIOR TO ANY ORDERING OF SUCH ITEMS.
24. CONTRACTOR SHALL BE RESPONSIBLE FOR COMMISSIONING OF EQUIPMENT.
25. PAINT EXPOSED SURFACES, WHETHER OR NOT COLORS ARE DESIGNATED IN SCHEDULES, EXCEPT WHERE A SURFACE OR MATERIAL IS SPECIFICALLY INDICATED NOT TO BE PAINTED OR IS TO REMAIN NATURAL. WHERE AN ITEM OR SURFACE IS NOT SPECIFICALLY MENTIONED, PAINT THE SAME AS SIMILAR ADJACENT MATERIALS OR SURFACES. IF COLOR OR FINISH IS NOT DESIGNATED, THE OWNER'S REPRESENTATIVE WILL SELECT FROM STANDARD COLORS OR FINISHES AVAILABLE.

    1) PAINTING INCLUDES FIELD PAINTING EXPOSED BARE AND COVERED PIPES AND DUCTS (INCLUDING COLOR CODING), HANGERS, EXPOSED STEEL AND IRON WORK, AND PRIMED METAL SURFACES OF MECHANICAL AND ELECTRICAL EQUIPMENT.
26. ALL MECHANICAL PIPING SYSTEMS, DUCTS, CONTROLS, VALVES, APPARATUS, ETC., EXCEPT THOSE THAT ARE INSTALLED IN INACCESSIBLE LOCATIONS IN PARTITIONS, WALLS, AND FLOORS, AND THOSE BURIED UNDERGROUND, SHALL BE PERMANENTLY MARKED AND IDENTIFIED AS INDICATED IN THE RELATED SPECIFICATIONS.
27. UNLESS SPECIFICALLY SHOWN ON THESE PLANS NO STRUCTURAL MEMBER SHALL BE CUT, DRILLED NOR NOTCHED WITHOUT PRIOR WRITTEN AUTHORIZATION FROM THE STRUCTURAL ENGINEER AND THE DISTRICT STRUCTURAL ENGINEER FROM THE DIVISION OF THE STATE ARCHITECT.
28. CONTRACTOR TO BALANCE THE AIRFLOW FOR THE HVAC UNITS AND ALSO CHECK PROPER OPERATION OF THE ECONOMIZER/ POWER EXHAUST TO MAINTAIN 0.02 INCHES MAXIMUM DIFFERENTIAL PRESSURE AT EACH DOOR TO MEET THE ADA REQUIREMENTS FOR DOOR OPENING/CLOSURE OF NO MORE THAN 5 POUNDS. CONTRACTOR TO MAKE NECESSARY ADJUSTMENTS TO MEET THESE REQUIREMENTS

----- CONTROLS -----

1. CONTROL SCHEMATICS ARE FOR SEQUENCE ONLY. REFER TO ELECTRICAL DRAWINGS AND SPECIFICATIONS FOR ALL ELECTRICAL DEVICES REQUIRED.
2. ALL LINE VOLTAGE WIRING SHALL BE INSTALLED IN CONDUIT. ALL LINE VOLTAGE CONDUIT AND WIRING, INCLUDING FINAL CONNECTIONS, SHALL BE FURNISHED AND INSTALLED BY THE ELECTRICAL CONTRACTOR AS INDICATED ON THE ELECTRICAL DRAWINGS OR SPECIFIED IN THE ELECTRICAL SECTION OF THE SPECIFICATIONS. ALL ELECTRICAL WORK SHALL BE INSTALLED IN ACCORDANCE WITH ALL APPLICABLE CODES AND REGULATIONS OF ALL GOVERNING BODIES HAVING JURISDICTION THEREOF.
3. ALL LOW VOLTAGE CONDUIT AND WIRING AS APPLICABLE, INCLUDING FINAL CONNECTIONS, SHALL BE FURNISHED AND INSTALLED BY THE MECHANICAL CONTRACTOR AS INDICATED ON THE MECHANICAL DRAWINGS.

    A1) ALL LOW VOLTAGE WIRING SHALL BE INSTALLED IN CONDUIT.

    A2) ALL LOW VOLTAGE WIRING SHALL BE PLENUM – RATED.

    B) WHERE THE CONTROLS CONTRACTOR IS RETAINED BY THE OWNER, THEY SHALL BE RESPONSIBLE FOR THE FOLLOWING:

    1) FURNISH AND INSTALL ALL DEVICES, WIRING, AND TERMINATIONS REQUIRED FOR A COMPLETE AND FUNCTIONAL INSTALLATION.

    2) COORDINATE ALL WORK AND REQUIREMENTS WITH OTHER TRADES INCLUDING GENERAL, MECHANICAL, AND ELECTRICAL CONTRACTORS PRIOR TO BID.

    3) CONTRACTOR SHALL FOLLOW ALL SUBMITTAL REQUIREMENTS PER DRAWINGS.
4. CONTRACTOR SHALL BE RESPONSIBLE FOR ORDERING AIR CONDITIONING EQUIPMENT WITH THRU-THE-BASE POWER, CONTROL, AND GAS CONNECTIONS. VERIFY ALL CONNECTION LOCATIONS WITH UNIT MANUFACTURER AND COORDINATE WITH OTHER TRADES AS NECESSARY.
5. ELECTRICAL CONTRACTOR SHALL PROVIDE REQUIRED RELAY ACCESSORIES FOR CONNECTION OF 120 VOLT 1 PHASE VENTILATION EQUIPMENT TO 277 VOLT 1 PHASE LIGHTING AS APPLICABLE.
6. ALL THERMOSTATS SHALL HAVE LOCKABLE COVERS (WHERE INDICATED ON PLANS) AND SHALL BE OF THE ELECTRONIC, PROGRAMMABLE, AUTOMATIC CHANGEOVER TYPE TO SEQUENCE HEATING OR COOLING. SET POINT RANGE SHALL BE 10 DEGREES F. BETWEEN FULL HEATING AND COOLING. THEY SHALL HAVE CAPABILITY OF TERMINATING ALL HEATING AT A TEMPERATURE NO MORE THAN 70 DEGREES F., AND COOLING AT A TEMPERATURE NOT LESS THAN 78 DEGREES F. ADJUSTABLE TEMPERATURE DIFFERENTIAL SHALL BE 1– 1/2 DEGREES F. CONTROL LIMITS SHALL BE FROM 55 DEGREES F. TO 85 DEGREES F. MOUNT AT 48 INCHES ABOVE FLOOR OR AS REQUIRED BY LOCAL AUTHORITIES OR HANDICAP CODES.

    NOTES: 1) THERMOSTATS THAT ARE PART OF AN ENERGY MANAGEMENT SYSTEM SHALL FOLLOW CONTROL SPECIFICATIONS AND DRAWING REQUIREMENTS.

    2) SHOULD THE LOCATION OF THE THERMOSTAT NOT MEET THE ADA HEIGHT REQUIREMENTS DUE TO OBSTRUCTIONS, THEN AN ALTERNATE LOCATION SHALL BE PROPOSED OR REQUESTED BY THE CONTRACTOR THAT SHALL BE APPROVED BY THE ENGINEER AND ARCHITECT.
7. LINE VOLTAGE THERMOSTATS SHALL BE FURNISHED BY THE MECHANICAL CONTRACTOR AND INSTALLED BY THE ELECTRICAL CONTRACTOR.
8. CONTROLS CONTRACTOR AND AIR BALANCE CONTRACTOR SHALL COORDINATE WORK AND PERFORM NECESSARY TASKS AS REQUIRED TO OBTAIN AIR AND WATER FLOW QUANTITIES FOR SYSTEMS SHOWN HEREIN.

    CONTROLS SHALL BE PROVIDED TO PROVIDE THE MINIMUM RATE OF OUTDOOR AIR REQUIRED BY THE STATE ENERGY REGULATIONS.
9. ----- AIR DISTRIBUTION -----
1. ALL DUCTWORK SHALL BE SHEET METAL CONSTRUCTED OR SPIRAL ERECTED, AND TESTED IN ACCORDANCE WITH THE MOST RESTRICTIVE OF LOCAL REGULATIONS, PROCEDURES DETAILED IN THE ASHRAE HANDBOOK OF FUNDAMENTALS, CHAPTER 6 OF THE MECHANICAL CODE, OR THE APPLICABLE STANDARDS ADOPTED BY THE SHEET METAL AND AIR CONDITIONING CONTRACTORS NATIONAL ASSOCIATION.
2. CONTRACTOR SHALL PROVIDE EXTERIOR MANUAL VOLUME DAMPER HANDLES W/ LOCK-DOWN AFTER COMPLETING AIR BALANCE & OBTAIN FINAL APPROVAL FROM ENGINEER.
3. ALL FLEXIBLE DUCTWORK SHALL NOT EXCEED SEVEN FEET IN LENGTH TO RESPECTIVE DIFFUSERS, GRILLES, AND REGISTERS, OR OTHER AIR DEVICES.
4. PROVIDE SEISMIC RESTRAINTS TO ALL DUCTWORK, PIPE, AND EQUIPMENT SUPPORTS IN ACCORDANCE WITH THE LATEST SMACNA GUIDELINES FOR SEISMIC RESTRAINT OF MECHANICAL SYSTEMS. SUSPENDED EQUIPMENT SHALL BE PROVIDED WITH SEISMIC ANCHORAGE AND ISOLATION SUPPORTS.
5. ALL DUCT TURNS IN SUPPLY, RETURN, AND EXHAUST DUCTS SHALL HAVE SINGLE WALL TURNING VANES WITH TRAILING EDGE, UNLESS OTHERWISE NOTED.
6. DUCTWORK HANDLING CONDITIONED AIR SHALL BE INSULATED OR LINED AS INDICATED ON DRAWINGS. SUPPLY AND RETURN DUCT INSULATION SHALL BE MIN. 2" THICK, 1.5 LB./CUBIC FT. DENSITY AND HAVE A MIN. VALUE OF R-8 WHERE LOCATED IN ONE OR MORE OF THE FOLLOWING SPACES:

    A) OUTDOORS, OR

    B) IN A SPACE BETWEEN THE ROOF AND AN INSULATED CEILING, OR

    C) IN A SPACE DIRECTLY UNDER A ROOF WITH FIXED VENTS OR OPENINGS TO THE OUTSIDE OR UNCONDITIONED SPACES, OR

    D) IN AN UNCONDITIONED CRAWLSPACE; OR

    E) IN OTHER UNCONDITIONED SPACES

    PER 2016 CEC, OTHERWISE PROVIDE R-6.2 WHEN LOCATED IN CONDITIONED ATTIC SPACES ABOVE CEILINGS . ALL DUCTWORK EXPOSED ON ROOF SHALL BE INTERNALLY LINED WITH 2" THICK, 1.5LB./CUBIC FT. DENSITY DUCT LINER UNLESS OTHERWISE INDICATED OR SPECIFIED. ALL DUCT SIZES ARE NET CLEAR INSIDE DIMENSIONS. ALL DUCT JOINTS SHALL BE SEALED PER CHAPTER 6 MECHANICAL CODE REQUIREMENTS. PROVIDE PIPING AND DUCT INSULATION IN ACCORDANCE WITH THE LATEST STANDARDS OF THE CALIFORNIA ENERGY COMMISSION.
7. ALL INSULATION SHALL HAVE A FLAME SPREAD OF NOT MORE THAN 25 AND A SMOKE DENSITY NOT EXCEEDING 50.
8. MANUAL VOLUME DAMPERS SHALL BE PROVIDED IN ALL DUCT BRANCHES TO INDIVIDUAL DIFFUSERS, GRILLES, AND REGISTERS, AS WELL AS FRESH AIR INTAKE DUCTS. DAMPERS SHALL BE LOCATED AT THE BRANCH DUCT LOCATIONS. THE MECHANICAL CONTRACTOR SHALL COORDINATE LOCATIONS OF DAMPERS WITH THE AIR BALANCE CONTRACTOR PRIOR TO BID, SO THEY ARE ACCESSIBLE PRIOR TO INSTALLATION. IN LOCATIONS WHERE THESE DAMPERS ARE INACCESSIBLE, CABLE OPERATED ADJUSTMENT CONTROLS SHALL BE PROVIDED AT NO ADDITIONAL COST. OPPOSED BLADE DAMPERS SHALL NOT BE PERMITTED UNLESS NOTED OTHERWISE.
9. AUTOMATIC SMOKE FIRE DAMPER REQUIREMENTS ARE AS FOLLOWS:

    A) PROVIDE AUTOMATIC SMOKE FIRE DAMPERS AT ALL PENETRATIONS OF FIRE-RATED CEILINGS AND WALLS THROUGHOUT. CONTRACTOR SHALL COORDINATE FIRE-RATED AREAS WITH THE MECHANICAL DRAWINGS AND OTHER TRADES PRIOR TO INSTALL AND SHALL NOTIFY PERTINENT PARTIES PRIOR TO ANY WORK PERFORMED IN THESE AREAS. IN ADDITION, CONTRACTOR SHALL BE RESPONSIBLE TO PROVIDE PROPER ACCESS FOR DAMPERS INSTALLED. THE DAMPER FIRE RATING SHALL BE COMPATIBLE WITH THE CEILING/WALL RATING.

    B) LOCATION OF FIRE-RATED CEILINGS AND WALLS ARE AS INDICATED ON THE MECHANICAL DRAWINGS.

    C) FIRE AND/OR SMOKE DAMPER(S) SHALL BE PROVIDED AS REQUIRED BY THE LATEST CALIFORNIA BUILDING CODE.

    D) CONTRACTOR SHALL FURNISH FLUSH MOUNTED FIRE AND/OR SMOKE DAMPERS, SO THAT DAMPER DO NOT EXTEND PASS WALLS, FOR AREAS WITHOUT CEILINGS FOR QUALITY WORKMANSHIP.
10. CONTRACTOR SHALL PERFORM MAINTENANCE ON ALL EXISTING FIRE AND SMOKE/FIRE DAMPERS PER MANUFACTURER'S PROVISIONS. ANY FAILURES OR NON-OPERATING DAMPERS SHALL BE REPLACED AND SHALL CONFORM TO CURRENT CODE REGULATIONS.
11. ALL DUCTWORK PASSING THROUGH FIRE RATED CORRIDORS AND LOBBIES SHALL BE MIN. 26 GAGE SHEET METAL CONSTRUCTION.
12. ALL DUCTWORK, PIPING, CONDUIT, & ETC. PENETRATING FIRE RATED CONSTRUCTION SHALL HAVE APPROVED FIRE STOPPING.
13. UNLESS OTHERWISE NOTED THE CONTRACTOR SHALL BE RESPONSIBLE FOR FURNISHING AND INSTALLING EXTERIOR LOUVERS CALLED OUT HEREIN. COORDINATE SIZE(S) AND LOCATION(S) WITH OTHER TRADES AS NECESSARY PRIOR TO BID.

----- ROOFING -----

1. CONTRACTOR TO REMOVE (E) ROOFING AS REQUIRED AND RE-ROOF OVER NEW EQUIPMENT PAD WITH MEMBRANE TO MATCH (E). NEW ROOF MEMBRANE TO TIE INTO (E) MEMBRANE PER MEMBRANE MANUFACTURER'S REQUIREMENTS.

LEGEND

SYMBOL	ABBR.	DESCRIPTION
	–	SUPPLY AIR RISER
	–	RETURN AIR RISER
	–	EXHAUST AIR RISER
	SAG	SUPPLY AIR GRILLE
	RAG	RETURN AIR GRILLE
	EAG	EXHAUST AIR GRILLE
	SWR	SIDEWALL REGISTER
	(L)	LINED DUCTWORK
	–	FLEXIBLE CONNECTION
	FC	FLEXIBLE CONNECTION
	–	NEW DUCT (SEE PLAN)
	–	EXISTING DUCT (SEE PLAN)
	–	DEMO DUCT (SEE PLAN)
	MVD	MANUAL VOLUME DAMPER
	BDD	BACKDRAFT DAMPER
S/F	SFD	SMOKE / FIRE DAMPER
F	FD	FIRE DAMPER
	DL	DOOR LOUVER
U.C.	UC	UNDERCUT DOOR 3/4"
RS	RS	REFRIGERANT SUCTION LINE
RL	RL	REFRIGERANT LIQUID LINE
CD	CD	CONDENSATE DRAIN
	S.D.	SMOKE DETECTOR
	P.O.C.	POINT OF CONNECTION
	T-STAT	THERMOSTAT
H	H	HUMIDISTAT
TS	TS	TEMPERATURE SENSOR
OS	OS	OVERRIDE SWITCH
PD	PD	PRESSURE DIFFERENTIAL SWITCH
S	S	SWITCH
	O.C.	ON CENTER
	HWR	HOT-WATER RETURN
	HWS	HOT-WATER SUPPLY
	I.D.	INSIDE DIAMETER
	O.D.	OUTSIDE DIAMETER
	W/	WITH
	S/M	SHEET METAL
	S/S	STAINLESS STEEL
	G.C.	GENERAL CONTRACTOR
	VTR	VENT THRU ROOF
	EMS	ENERGY MANAGEMENT SYSTEM
	OBD	OPPOSED BLADE DAMPER
	FSC	FAN SPEED CONTROL
E	E	ITEMS FURNISHED AND INSTALLED BY ELECTRICAL CONTRACTOR AS SPECIFIED ON THE ELECTRICAL CONTRACT DOCUMENTS
M	M	ITEMS FURNISHED AND INSTALLED BY MECHANICAL CONTRACTOR AS SPECIFIED ON THE MECHANICAL CONTRACT DOCUMENTS
EM	EM	ITEMS FURNISHED BY ELECTRICAL CONTRACTOR AND INSTALLED BY MECHANICAL CONTRACTOR.
ME	ME	ITEMS FURNISHED BY MECHANICAL CONTRACTOR AND INSTALLED BY ELECTRICAL CONTRACTOR.
	C.C.	CONTROLS CONTRACTOR
	CBD	COUNTER-BALANCE DAMPER
DS	D.S.	DOOR SWITCH

SHEET INDEX

S.NO.	SHEET No.	SHEET TITLE
1	M-01	MECHANICAL GENERAL NOTE AND LEGEND
2	M-02	MECHANICAL SCHEDULES
3	M-2.0	MECHANICAL BUILDING A DEMOLITION AND REMODEL PLANS
4	M-2.1	MECHANICAL BUILDING C DEMOLITION AND REMODEL PLANS
5	M-2.2	MECHANICAL BUILDING D DEMOLITION AND REMODEL PLANS
6	M-2.3	MECHANICAL BUILDING E DEMOLITION AND REMODEL PLANS
7	M-2.4	MECHANICAL BUILDING F DEMOLITION AND REMODEL PLANS
8	M-2.5	MECHANICAL BUILDING G DEMOLITION AND REMODEL PLANS
9	M-2.6	MECHANICAL BUILDING K DEMOLITION AND REMODEL PLANS
10	M-3.1	MECHANICAL SECTIONS
11	M-4.1	MECHANICAL DETAILS
12	M-4.3	MECHANICAL DETAILS
13	M-4.4	MECHANICAL DETAILS
14	M-5.1	MECHANICAL CONTROLS
15	M-5.2	MECHANICAL CONTROLS
16	M-5.3	MECHANICAL CONTROLS
17	M-5.4	MECHANICAL CONTROLS
18	M-5.5	MECHANICAL CONTROLS
19	M-6.0	TITLE 24 BUILDING A
20	M-6.1	TITLE 24 BUILDING C
21	M-6.2	TITLE 24 BUILDING D
22	M-6.3	TITLE 24 BUILDING E
23	M-6.4	TITLE 24 BUILDING F
24	M-6.5	TITLE 24 BUILDING G
25	M-6.6	TITLE 24 BUILDING K

PIPING, DUCTWORK, AND ELECTRICAL DISTRIBUTION SYSTEM BRACING NOTE

PIPING, DUCTWORK AND ELECTRICAL DISTRIBUTION SYSTEMS SHALL BE BRACED TO COMPLY WITH THE FORCES AND DISPLACEMENTS PRESCRIBED IN ASCE 7-10 SECTION 13.3.3 AS DEFINED IN ASCE 7-10 SECTION 13.6.5.6, 13.6.7. 13.6.8 AND 2016 CBC, SECTIONS 1616A.1.24, 1616A.1.25, AND 1616A.1.26.

THE METHOD OF SHOWING BRACING AND ATTACHMENTS TO THE STRUCTURE FOR THE IDENTIFIED DISTRIBUTION SYSTEM ARE AS NOTED BELOW. WHEN BRACING AND ATTACHMENTS ARE BASED ON A PREAPPROVED INSTALLATION GUIDE (E.G. SMACNA OR OSHPD OPM), COPIES OF THE BRACING SYSTEM INSTALLATION GUIDE OR MANUAL SHALL BE AVAILABLE ON THE JOBSITE PRIOR TO THE START OF AND DURING THE HANGING AND BRACING OF THE DISTRIBUTION SYSTEMS. THE STRUCTURAL ENGINEER OF RECORD SHALL VERIFY THE ADEQUACY OF THE STRUCTURE TO SUPPORT THE HANGER AND BRACE LOADS.

MECHANICAL PIPING (MP), MECHANICAL DUCTS (MD), PLUMBING PIPING (PP), ELECTRICAL DISTRIBUTION SYSTEMS (E):

MPX MD_ PP_ E_ – OPTION 1: DETAILED ON THE APPROVED DRAWINGS WITH PROJECT SPECIFIC NOTES AND DETAILS.

MP_ MD_ PP_ E_ – OPTION 2: SHALL COMPLY WITH THE APPLICABLE DRAWINGS WITH PROJECT SPECIFIC NOTES AND DETAILS.

MP_ MD_ PP_ E_ – OPTION 3: SHALL COMPLY WITH THE SMACNA SEISMIC RESTRAINT MANUAL, OSHPD EDITION (2009), INCLUDING ANY ADDENDA. FASTENERS AND OTHER ATTACHMENTS NOT SPECIFICALLY IDENTIFIED IN THE SMACNA SEISMIC RESTRAINT MANUAL, OSHPD EDITION, ARE DETAILED ON THE APPROVED DRAWINGS WITH PROJECT SPECIFIC NOTES AND DETAILS. THE DETAILS SHALL ACCOUNT FOR THE APPLICABLE SEISMIC HAZARD LEVEL_____ AND THE CONNECTION LEVEL_____ FOR THE PROJECT AND CONDITIONS. .

MEP COMPONENT ANCHORAGE NOTE

ALL MECHANICAL, PLUMBING AND ELECTRICAL COMPONENTS SHALL BE ANCHORED AND INSTALLED PER THE DETAILS ON THE DSA APPROVED CONSTRUCTION DOCUMENTS. WHERE NO DETAIL IS INDICATED, THE FOLLOWING COMPONENTS SHALL BE ANCHORED OR BRACED TO MEET THE FORCE AND DISPLACEMENT REQUIREMENTS PRESCRIBED IN THE 2016 CBC, SECTION 1616A.1.18 THROUGH 1616A.1.26 AND ASCE 7-10 CHAPTER 13, 26 AND 30.

1. ALL PERMANENT EQUIPMENT AND COMPONENTS.
2. TEMPORARY OR MOVABLE EQUIPMENT THAT IS PERMANENTLY ATTACHED (e.g. HARD WIRE) TO THE BUILDING UTILITY SERVICES SUCH AS ELECTRICITY, GAS OR WATER.
3. MOVABLE EQUIPMENT WHICH IS STATIONED IN ONE PLACE FOR MORE THAN 8 HOURS AND HEAVIER THAN 400 POUNDS ARE REQUIRED TO BE ANCHORED WITH TEMPORARY ATTACHMENTS.

THE ATTACHMENT OF THE FOLLOWING MECHANICAL AND ELECTRICAL COMPONENTS SHALL BE POSITIVELY ATTACHED TO THE STRUCTURE, BUT NEED NOT BE DETAILED ON THE PLANS. THE PROJECT INSPECTOR WILL VERIFY THAT THESE ITEMS HAVE BEEN POSITIVELY ATTACHED. THESE COMPONENTS SHALL HAVE FLEXIBLE CONNECTIONS PROVIDED BETWEEN THE COMPONENT AND ASSOCIATED DUCTWORK, PIPING AND CONDUIT.

A. COMPONENTS WEIGHING LESS THAN 400 POUNDS AND HAVE A CENTER OF MASS LOCATED 4 FEET OR LESS ABOVE THE ADJACENT FLOOR OR ROOF LEVEL THAT DIRECTLY SUPPORT THE COMPONENT.
B. COMPONENTS WEIGHING LESS THAN 20 POUNDS, OR IN THE CASE OF DISTRIBUTED SYSTEMS, LESS THAN 5 POUNDS PER FOOT, WHICH ARE SUSPENDED FROM A ROOF OR FLOOR OR HUNG FROM A WALL.

FOR THOSE ELEMENTS THAT DO NOT REQUIRE DETAILS ON THE APPROVED DRAW

VARIABLE AIR VOLUME BOX SCHEDULE

TAG	MFR. & MODEL #	AC UNIT	ROOM	SIZE, IN.		CFM		WEIGHT (LB)	ANCHORAGE DETAIL	REMARKS
				INLET	OUTLET	MAX	MIN			
VAV1 C	CARRIER 35E12	AC1 C	CLASSROOM 103C	12	16"X14"	1,400	350	35	3 S1.0 / 11 M-4.7	1
VAV2 C	CARRIER 35E12	AC1 C	CLASSROOM 104C	12	16"X14"	1,400	350	35	3 S1.0 / 11 M-4.7	1
VAV3 C	CARRIER 35E12	AC1 C	CLASSROOM 105C	12	16"X14"	1,400	350	35	3 S1.0 / 11 M-4.7	1
VAV4 C	CARRIER 35E12	AC1 C	CLASSROOM 112C	12	16"X14"	1,400	350	35	3 S1.0 / 11 M-4.7	1
VAV5 C	CARRIER 35E	AC1 C	CLASSROOM 113C	12	16"X14"	1,400	350	35	3 S1.0 / 11 M-4.7	1
VAV6 C	CARRIER 35E	AC1 C	CLASSROOM 114C	12	16"X14"	1,400	350	35	3 S1.0 / 11 M-4.7	1
VAV1 D	CARRIER 35E	AC1 D	CLASSROOM 103D	12	16"X14"	1,400	350	35	3 S1.0 / 11 M-4.7	1
VAV2 D	CARRIER 35E	AC1 D	CLASSROOM 104D	12	16"X14"	1,400	350	35	3 S1.0 / 11 M-4.7	1
VAV3 D	CARRIER 35E	AC1 D	CLASSROOM 105D	12	16"X14"	1,400	350	35	3 S1.0 / 11 M-4.7	1
VAV4 D	CARRIER 35E	AC1 D	CLASSROOM 112D	12	16"X14"	1,400	350	35	3 S1.0 / 11 M-4.7	1
VAV5 D	CARRIER 35E	AC1 D	CLASSROOM 113D	12	16"X14"	1,400	350	35	3 S1.0 / 11 M-4.7	1
VAV6 D	CARRIER 35E	AC1 D	CLASSROOM 114D	12	16"X14"	1,400	350	35	3 S1.0 / 11 M-4.7	1
VAV1 F	CARRIER 35E	AC1 F	CLASSROOM 103F	12	16"X14"	1,400	350	35	3 S1.0 / 11 M-4.7	1
VAV2 F	CARRIER 35E	AC1 F	CLASSROOM 104F	12	16"X14"	1,400	350	35	3 S1.0 / 11 M-4.7	1
VAV3 F	CARRIER 35E	AC1 F	CLASSROOM 105F	12	16"X14"	1,400	350	35	3 S1.0 / 11 M-4.7	1
VAV4 F	CARRIER 35E	AC1 F	CLASSROOM 109F	12	16"X14"	1,400	350	35	3 S1.0 / 11 M-4.7	1
VAV5 F	CARRIER 35E	AC1 F	CLASSROOM 110F	12	16"X14"	1,400	350	35	3 S1.0 / 11 M-4.7	1
VAV6 F	CARRIER 35E	AC1 F	CLASSROOM 111F	12	16"X14"	1,400	350	35	3 S1.0 / 11 M-4.7	1
VAV1 G	CARRIER 35E	AC1 G	CLASSROOM 108G	12	16"X14"	1,350	350	35	3 S1.0 / 11 M-4.7	1
VAV2 G	CARRIER 35E	AC1 G	CLASSROOM 107G	12	16"X14"	1,275	350	35	3 S1.0 / 11 M-4.7	1
VAV3 G	CARRIER 35E	AC1 G	CLASSROOM 108G	12	16"X14"	1,275	350	35	3 S1.0 / 11 M-4.7	1
VAV4 G	CARRIER 35E	AC1 G	SPEECHROOM 101G	6	12"X8"	250	50	23	3 S1.0 / 11 M-4.7	1
VAV1 K	CARRIER 35E	AC1 K	CLASSROOM 115K	12	16"X14"	2,000	400	35	3 S1.0 / 11 M-4.7	1
VAV2 K	CARRIER 35E	AC1 K	CLASSROOM 107K	14	16"X14"	2,800	560	43	3 S1.0 / 11 M-4.7	1
VAV3 K	CARRIER 35E	AC1 K	CLASSROOM 101K	12	16"X14"	2,000	400	35	3 S1.0 / 11 M-4.7	1

REMARKS

1. PROVIDE CARRIER ZS PRO SPACE SENSOR.

PACKAGED GAS/ELECTRIC A/C UNIT SCHEDULE

SYMBOL	MAKE	MODEL	TYPE	AC TONNAGE	COOLING CAPACITY		HEAT. INPUT	OSA	EER	SUPPLY FAN			ELECTRICAL				UNIT WT	ANCHORAGE DETAIL	CONTROL DETAIL	REMARKS
					SENSIBLE(MBH)	TOTAL (MBH)	CAP. (MBH)	CFM		ESP	CFM	BHP	VOLTS	PH	MCA	MOCP	(LBS)			
AC1 A	CARRIER	48VLNC60	CV	5T	57.08	42.14	90	400	–	0.6	2,000	0.97	208	1	38.3	60	460	6 M-4.7	1 M-5.7	2, 3, 4, 5
AC1 C	CARRIER	48LCDB24A7A5	VAV	20T	187.84	252.02	176	2,100	10.94	1.25	7,500	9.83	208	3	130.8	150	2650	10 M-4.7	2 M-5.7	1, 2, 4, 5
AC1 D	CARRIER	48LCDB24A6A5	VAV	20T	194.22	254.59	176	2,100	10.94	1.25	7,500	9.83	208	3	130.8	150	2650	9 M-4.7	2 M-5.7	1, 2, 4, 5, 8
AC1 F	CARRIER	48LCDB24A6A5	VAV	20T	194.22	254.59	176	2,100	10.94	1.25	7,500	9.83	208	3	130.8	150	2650	10 M-4.7	2 M-5.7	1, 2, 4, 5
AC1 G	CARRIER	48LCDB12A2A5	VAV	10T	90.52	120.45	144	1,100	13.0	1.25	3,750	2.62	208	3	54	60	2025	13 M-4.7	2 M-5.7	2, 4, 5, 6, 7
AC1 K	CARRIER	48LCDB20A7A5	VAV	17.5T	153.24	203.46	176	1,360	11.2	1.25	6,575	7.94	208	3	104.6	125	2500	10 M-4.7	2 M-5.7	1, 2, 4, 5

REMARKS:

1. FACTORY PROVIDE NON-MODULATING POWER EXHAUST HORIZONTAL APPLICATION MOUNTING RETURN AIR DUCT WITH DRY BULB ECONOMIZER. POWER EXHAUST POWERED FROM UNIT.
2. PROVIDE HORIZONTAL SUPPLY AND RETURN.
3. FRESH AIR HOOD
4. 2" FILTERS (MERV 8)
5. TIME GUARD II CONTROL CIRCUIT
6. CONTRACTOR TO PROVIDE M.W. SAUSSE & CO., INC. 14" HIGH AC CURB AND MANUFACTURER STAMPED STRUCTURAL CALCULATION. (SEE M-4.3).
7. PROVIDE CANFAB MODULATING POWER EXHAUST HORIZONTAL APPLICATION MOUNTING AC UNIT WITH DRY BULB ECONOMIZER. PROVIDE SEPARATE POWER FOR CANFAN MODULATING POWER (MCA- 11.38 / MOCP - 20.48).
8. CONTRACTOR TO PROVIDE M.W. SAUSSE & CO., INC. CUSTOM 30" HIGH AC CURB WITH RETURN DUCT THRU CURB AND MANUFACTURER STAMPED STRUCTURAL CALCULATION. (SEE M-4.4).

NOTES

1. CONTRACTOR TO VERIFY FINAL UNIT LOCATIONS PRIOR TO INSTALLATION.
2. ELECTRICAL SHALL PROVIDE ONE DISCONNECT SWITCH AND SINGLE FEED FOR UNIT AND POWER EXHAUST.
3. POWER EXHAUST FLA AND MCA INCLUDED IN SCHEDULE EXCEPT AC1/G. SEE REMARK 7.

AIR DISTRIBUTION SCHEDULE

SYM.	MFR. & MODEL #	NECK SIZE	CFM RANGE	MAX. NECK VELOCITY	MAX. N.C.	S.P. DROP	TYPE	DAMPER	REMARKS
– SD-1	KRUEGER 1240	8"x8" 10"x10" 12"x12" 14"x14" 16"x16" 18"x18"	0-170 171-270 271-390 391-540 541-700 701-900	400	30	.06	MODULAR	NONE	FRAME 23 FOR T-BAR
– RG-3	KRUEGER EGC5	48"X24"	0-3600	400	30	.03	EGG-CRATE	NONE	–

LEGEND

400 / SD-1 — CFM / AIR DISTRIBUTION DEVICE

SD	SUPPLY DIFFUSER
RG	RETURN GRILLE
TG	TRANSFER GRILLE
EG	EXHAUST GRILLE

ZONE AND BYPASS DAMPER SCHEDULE

SYM	MFR & MODEL #	AC UNIT	AREA SERVICED	CFM		MIN. S.P.	INLET SIZE	WT	REMARKS
				MAX.	MIN.				
ZD 1	CARRIER 35E	ACB 1	RECEPTION/WAITING 101/102	1,400	350	0.05	16"ø	47	1
ZD 2	CARRIER 35E	ACB 1	CONFERENCE 106	1,400	350	0.05	16"ø	47	1
ZD 3	CARRIER 35E	ACB 1	OFFICE 104	1,400	350	0.05	16"ø	47	1
ZD 4	CARRIER 35E	ACB 1	OFFICE 103	1,400	350	0.05	16"ø	47	1
BD 1	CARRIER	ACB 1	SEE PLAN	1,400	350	0.05	16"ø	47	2

1. PROVIDE OPN-VVTZC ZONE DAMPER CONTROLLER
2. PROVIDE CARRIER BYPASS DAMPER CONTROLLER

WLC ARCHITECTS
CLIENT FOCUSED • PASSION DRIVEN
SOUTHERN CALIFORNIA
8163 ROCHESTER AVENUE, SUITE 100
RANCHO CUCAMONGA
CALIFORNIA 91730-0729
TEL: 909-987-0909
www.wlcarchitects.com

LONGFELLOW ELEMENTARY SCHOOL HVAC REPLACEMENT

COMPTON UNIFIED SCHOOL DISTRICT
1101 S DWIGHT AVE.
COMPTON, CA 90220

LICENSED ARCHITECT — MARK GRAHAM C-26046 03-31-19 — STATE OF CALIFORNIA

REGISTERED PROFESSIONAL ENGINEER — RAMEZ BANEKAS No. M29253, Exp. 6/30/19 — MECHANICAL — STATE OF CALIFORNIA

CONSULTANT

IDENTIFICATION STAMP
DIV. OF THE STATE ARCHITECT
OFFICE OF REGULATION SERVICES
APPL 03-118423
AC FLS SS KEY
DATE MAR 06 2018
FILE: 19-23

NO	DATE	BY	DESCRIPTION
1			REVISIONS

DRAWN: KC | CHECKED:
DATE: 3/6/2018 | SCALE:
PROJECT NUMBER: 570064

MECHANICAL SCHEDULES

DRAWING NUMBER: M-02

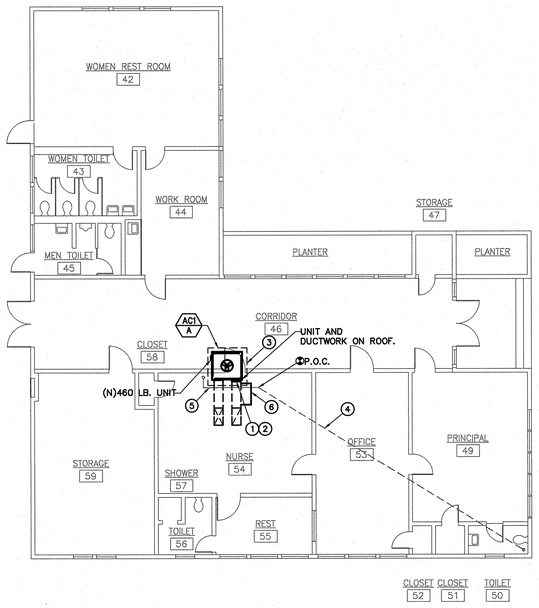

NORTH

BUILDING A - REMODEL FLOOR PLAN | 1/8" = 1'-0" | 1

CONSTRUCTION KEY NOTES:

1. CONTRACTOR TO PROVIDE FLEX. DUCT BETWEEN NEW AC UNIT AND EXISTIGN DUCTWORK. PROVIDE ALL DUCT TRANSITION AS REQUIRED TO CONNECT EXISTING DUCTWORK.
2. CONTRACTOR TO PROVIDE EXTENSION ON GAS PIPING AND CONDENSATE AS REQUIRED AND CONNECT EXISTING GAS AND CONDENSATE DRAIN TO NEW AC UNITS. PROVIDE A NEW VENTED P TRAP IF NECESSARY.
3. EXISTING EQUIPMENT PLATFORM. SEE STRUCTURAL SHEET DETAIL #2/S1.0 AND #6/M-4.1.
4. PARTIAL EXISTING CONDENSATE DRAIN TO REMAIN.
5. NEW CONDENSATE DRAIN.
6. NEW O.S.A. HOOD TO BE PROVIDED.

CONSTRUCTION NOTES:

1. FRESH AIR INTAKE(S) SHALL BE 10'-0"(MIN.) AWAY OR 3'-0" (MIN.) BELOW ANY EXHAUST OUTLET, PLUMBING VENT, OR FLUE.

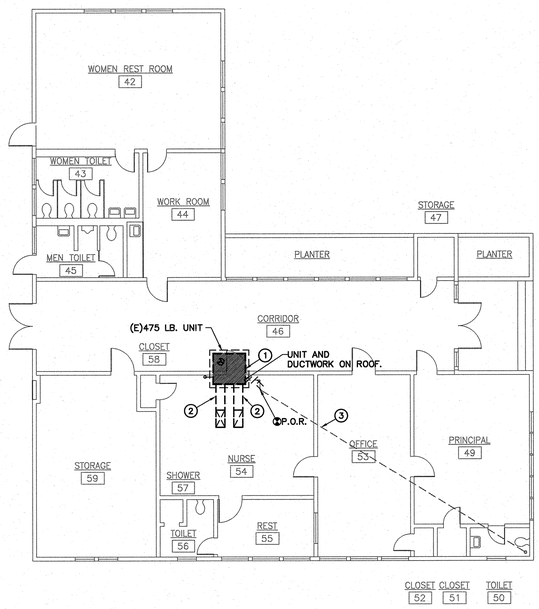

NORTH

BUILDING A - DEMOLITION FLOOR PLAN | 1/8" = 1'-0" | 2

DEMOLITION KEY NOTES:

1. EXISTING AC UNIT AND ALL RELATED ACCESSORIES TO BE REMOVED AND WITH NEW. EXISTING EQUIPMENT FLATFORM TO REMAIN.
2. EXISTING SUPPLY AND RETURN DUCTWORK TO REMAIN.
3. PARTIAL EXISTING CONDENSATE DRAIN TO REMAIN.

DEMOLITION NOTES:

1. OWNER SHALL HAVE FIRST RIGHT OF REFUSAL ON ALL ITEMS TO BE REMOVED. CONTRACTOR SHALL VERIFY ALL SUCH ITEMS WITH OWNER PRIOR TO REMOVAL. ALL ITEMS NOT REFUSED BY OWNER SHALL BE REMOVED INTACT AND FULLY FUNCTIONAL BY CONTRACTOR AND RETURNED TO OWNER. ALL ITEMS REFUSED BY OWNER SHALL BE PROPERLY DISPOSED OF BY CONTRACTOR.
2. PLUMBING CONTRACTOR SHALL DISCONNECT EXISTING GAS AND CONDENSATE DRAIN PIPES FROM MECHANICAL EQUIPMENT TO BE REMOVED AND REPLACED — AS REQUIRED FOR NEW CONNECTION TO NEW AC UNIT.
3. CONTRACTOR SHALL RE-USE EXISTING OPENINGS IN WALLS AND ROOF. COORDINATE WITH OTHER TRADES AS NECESSARY.
4. GENERAL CONTRACTOR SHALL PATCH ALL OPENINGS IN WALLS, ROOF, ETC. THAT WILL NOT BE REUSED FOR FUTURE WORK. COORDINATE AS NECESSARY WITH OTHER TRADES.
5. PRIOR TO ANY WORK BEING DONE CONTRACTOR SHALL MAKE A CAREFUL EVALUATION OF THE EXISTING CONDITIONS AND VERIFY ALL METHODS OF REMOVAL AND INSTALLATION OF MECHANICAL EQUIPMENT.
6. CONTRACTOR SHALL COORDINATE ALL DEMOLITION WORK WITH THE WORK OF ALL OTHER TRADES
7. PATCH ROOF AS NECESSARY. PATCH FLASHINGS AS NECESSARY.

WLC ARCHITECTS
CLIENT FOCUSED • PASSION DRIVEN
SOUTHERN CALIFORNIA
8163 ROCHESTER AVENUE, SUITE 100
RANCHO CUCAMONGA
CALIFORNIA 91730-0729
TEL: 909-987-0909
www.wlcarchitects.com

LONGFELLOW ELEMENTARY SCHOOL HVAC REPLACEMENT

COMPTON UNIFIED SCHOOL DISTRICT
1101 S DWIGHT AVE.
COMPTON, CA 90220

LICENSED ARCHITECT — MARC GRAHAM — C-26046 — 03-31-19 — STATE OF CALIFORNIA
REGISTERED PROFESSIONAL ENGINEER — BRIAN BAKER — No. M29253 — Exp. 6/30/19 — MECHANICAL — STATE OF CALIFORNIA

CONSULTANT

IDENTIFICATION STAMP
DIV. OF THE STATE ARCHITECT
OFFICE OF REGULATION SERVICES
APPL 03-118423
AC — FLS — SS EY
DATE MAR 01 2019
R.E.: 19-23

NO	DATE	BY	DESCRIPTION
1			REVISIONS

DRAWN: KC | CHECKED:
DATE: 3/6/2018 | SCALE:
PROJECT NUMBER: 570064

BUILDING A DEMO AND REMODEL FLOOR PLANS

DRAWING NUMBER: M-2.0

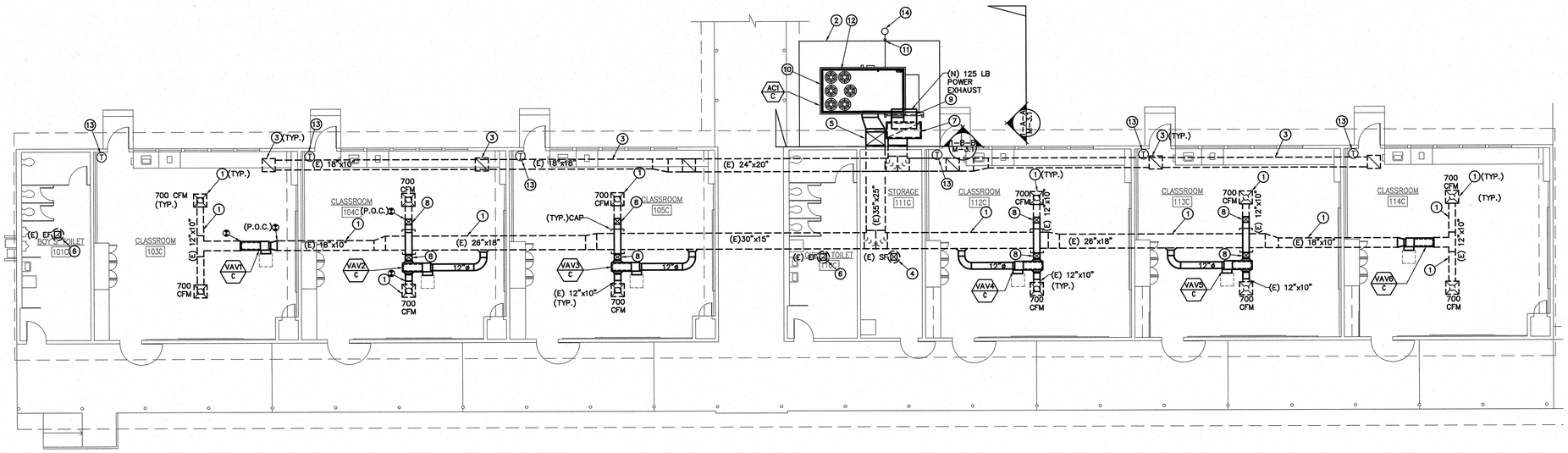

CONSTRUCTION KEY NOTES:

1. EXISTING MAIN SUPPLY DUCTWORK AND SUPPLY AIR DIFFUSERS TO REMAIN. SEE SHEET #2,#3, AND #4/M-4.1 FOR CEILING DIFFUSER AND DUCT SUPPORT DETAIL.
2. NEW FENCE AND CONCRETE PAD.
3. EXISTING MAIN RETURN DUCT AND GRILLES TO REMAIN SEE SHEET #2,#3, AND #4/M-4.1 FOR CEILING DIFFUSER AND DUCT SUPPORT DETAIL.
4. EXISTING SUPPLY FAN AND DUCTWORK TO REMAIN.
5. NEW 35"X25"(L) SUPPLLY AIR DUCT. 40"X28" SHEET METAL SIZES. SEE STRUCTURAL DETAIL SHEET #1/S2.1.
6. EXISTING EXHAUST FAN AND DUCTWORK TO REMAIN.
7. NEW 60"X26"(L) RETURN AIR DUCT. 64"X30" SHEET METAL SIZES. SEE STRUCTURAL DETAIL SHEET #1/S2.1.
8. CONTRACTOR TO OFFSET NEW (W) 12"X10" DUCT ABOVE MAIN SUPPLY DUCT.
9. POWER EXHAUST MOUNTED ON THE NEW RETURN DUCT. SEE STRUCTURAL DETAIL SHEET #1/S2.1.
10. NEW 20 TON AC UNIT WILL BE ON CONCRETE PAD. SEE DETAIL SHEET # 10/M-4.1 FOR PAD.
11. 3/4" CONDENSATE DRAIN TO DRY WELL. PROVIDE NEW VENTED P-TRAP IF NECESSARY.
12. CONTRACTOR TO PROVIDE EXTENSION ON GAS PIPING AS REQUIRED TO RECONNECT EXISTING GAS PIPING TO NEW AC UNIT.
13. ELECTRONIC EMS THERMOSTAT MOUNT AT 48" A.F.F. SEE DETAIL SHEET #7/M-4.1 FOR A/C CONTROL.
14. NEW DRY WELL. SEE DETAIL SHEET #5/M-4.1.

CONSTRUCTION NOTES:

1. CONTRACTOR SHALL COORDINATE WORK WITH OTHER TRADES AS NECESSARY PRIOR TO INSTALLATION.
2. CONTRACTOR SHALL MAINTAIN PROPER CLEARANCES FROM ALL ELECTRICAL EQUIPMENT AND SERVICE CLEARANCES FOR MECHANICAL EQUIPMENT.
4. FRESH AIR INTAKES SHALL BE 10'-0" MIN. AWAY FROM ALL EXHAUST OUTLETS, PLUMBING VENTS, AND FLUES.
5. CONTRACTOR SHALL COORDINATE EXACT EQUIPMENT PAD SIZES AND LOCATIONS WITH OTHER TRADES PRIOR TO INSTALLATION.
6. MAINTAIN MANUFACTURER MIN. CLEARANCES ON ALL AC UNITS.
7. BEFORE BIDDING ON THIS WORK, THE CONTRACTOR SHALL MAKE A CAREFUL EXAMINATION OF THE PREMISES, EXISTING EQUIPMENT AND SERVICES. HE SHALL DEFINITELY DETERMINE IN ADVANCE, THE METHODS OF INSTALLING AND CONNECTING THE NEW EQUIPMENT, DUCTWORK, AND PIPING THE MEANS TO BE PROVIDED FOR GETTING THE EQUIPMENT AND MATERIALS INTO PLACE AND SHALL MAKE HIMSELF THOROUGHLY FAMILIAR WITH ALL OF THE REQUIREMENTS OF THE PROJECT. FAILURE TO VSIT THE SITE WLL IN NO WAY RELIEVE THE SUCCESSFUL CONTRACTOR OF THE NECESSITY OF FURNISHING ANY MATERIAL OR PERFORMING ANY WORK THAT MAY BE REQUIRED TO COMPLETE THE WORK IN ACCORDANCE WITH THE DRAWINGS AND SPECIFICATIONS. THIS ADDITIONAL WORK SHALL BE PERFORMED WITHOUT ADDITIONAL COST TO THE OWNER.
8. BEFORE COMMENCEMENT OF WORK, THE CONTRACTOR SHALL VERIFY THE EXACT LOCATIONS AND DIMENSIONS OF ALL EXISTING EQUIPMENT AND ELECTRICAL SERVICES IN THE AREA OF CONSTRUCTION AND NOTIFY THE ENGINEER OF ANY DISCREPANCIES.

NORTH

BUILDING C - REMODEL FLOOR PLAN | 1/8" = 1'-0" | 1

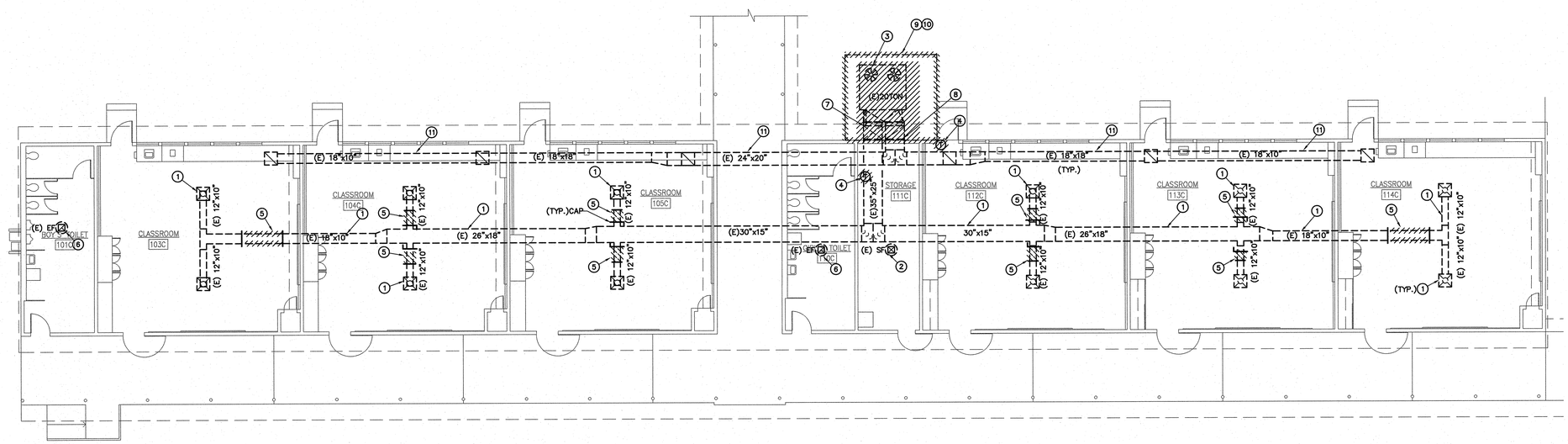

DEMOLITION KEY NOTES:

1. EXISTING MAIN SUPPLY DUCTWORK AND SUPPLY AIR DIFFUSERS TO REMAIN.
2. EXISTING SUPPLY FAN AND DUCTWORK TO REMAIN.
3. EXISTING AC UNIT. AC UNIT CURB AND RELATED ACCESSORIES TO BE REMOVED AND REPLACED WITH NEW AC UNIT.
4. EXISTING T-STAT TO BE REMOVED.
5. PARTIAL EXISTING SUPPLY AIR DUCT AND EXISTING MANUAL VOLUME DAMPER TO BE REMOVED. CAP UNUSED DUCT OPENING.
6. EXISTING EXHAUST FAN AND DUCTWORK TO REMAIN.
7. EXISTING 30"X25" MAIN SUPPLY AIR DUCT TO BE REMOVED AND REPLACED.
8. EXISTING 35"X25" RETURN DUCT TO BE REMOVED AND REPLACED.
9. EXISTING CONCRETE PAD TO BE REMOVED AND REPLACED WITH A NEW PAD.
10. EXISTING FENCE TO BE REMOVED AND REPLACED WITH A NEW FENCE AT A NEW LOCATION.
11. EXISTING MAIN RETURN DUCT AND AIR GRILLES TO REMAIN.

GENERAL DEMOLITION NOTES

1. OWNER SHALL HAVE FIRST RIGHT OF REFUSAL ON ALL ITEMS TO BE REMOVED. CONTRACTOR SHALL VERIFY ALL SUCH ITEMS WITH OWNER PRIOR TO REMOVAL. ALL ITEMS NOT REFUSED BY OWNER SHALL BE REMOVED INTACT AND FULLY FUNCTIONAL BY REFUSED BY OWNER SHALL BE PROPERLY DISPOSED OF BY CONTRACTOR.
2. CONTRACTOR SHALL RE-USE EXISTING OPENINGS IN WALLS AND ROOF WHEREVER POSSIBLE. COORDINATE WITH OTHER TRADES AS NECESSARY. GENERAL CONTRACTOR SHALL MODIFY OPENING AS REQUIRED TO ACCOMODATE NEW MECHANICAL DEVICE.
3. GENERAL CONTRACTOR SHALL PATCH ALL OPENINGS IN WALLS, ROOF, ETC. THAT WILL NOT BE REUSED FOR FUTURE WORK. COORDINATE AS NECESSARY WITH OTHER TRADES.
4. CONTRACTOR SHALL COORDINATE WITH OWNER PRIOR TO ANY WORK BEING DONE STORAGE OF MECHANICAL EQUIPMENT TO BE RE-USED DURING CONSTRUCTION.
5. PRIOR TO ANY WORK BEING DONE CONTRACTOR SHALL MAKE A CAREFUL EVALUATION OF THE EXISTING CONDITIONS AND VERIFY ALL METHODS OF REMOVAL AND INSTALLATION OF MECHANICAL EQUIPMENT.
6. CONTRACTOR SHALL COORDINATE ALL DEMOLITION WORK WITH THE WORK OF ALL OTHER TRADES.
7. CONTRACTOR SHALL CLEAN ALL AIR DEVICES AND DUCTWORK TO REMAIN PER SPECIFICATIONS.
8. CONTRACTOR SHALL CLEAN ALL EXISTING DUCTWORK INCLUDING LINED DUCTWORK TO REMAIN PER SPECIFICATIONS. PRIOR TO BID AND BEFORE COMMENCEMENT OF ANY WORK ALL EXISTING DUCTWORK TO REMAIN SHALL BE CONFIRMED ON SITE.

NORTH

BUILDING C - DEMOLITION FLOOR PLAN | 1/8" = 1'-0" | 2

WLC ARCHITECTS
CLIENT FOCUSED • PASSION DRIVEN

SOUTHERN CALIFORNIA
8163 ROCHESTER AVENUE, SUITE 100
RANCHO CUCAMONGA
CALIFORNIA 91730-0729

TEL: 909-987-0909
www.wlcarchitects.com

LONGFELLOW ELEMENTARY SCHOOL HVAC REPLACEMENT

COMPTON UNIFIED SCHOOL DISTRICT
1101 S DWIGHT AVE.
COMPTON, CA 90220

MARK GRAHAM C-26046 03-31-19 — LICENSED ARCHITECT — STATE OF CALIFORNIA

ABBY BANDERAS No. M29253 Exp. 6/30/19 — REGISTERED PROFESSIONAL ENGINEER — MECHANICAL — STATE OF CALIFORNIA

CONSULTANT

IDENTIFICATION STAMP
DIV. OF THE STATE ARCHITECT
OFFICE OF REGULATION SERVICES
APPL 03-118423
AC — FLS — SS — EY
DATE MAR 0 6 2018
FILE: 19-23

NO	DATE	BY	DESCRIPTION
			REVISIONS

DRAWN: KC	CHECKED:
DATE: 3/6/2018	SCALE:
PROJECT NUMBER: 570064	

BUILDING C DEMO AND REMODEL FLOOR PLANS

DRAWING NUMBER: M-2.1

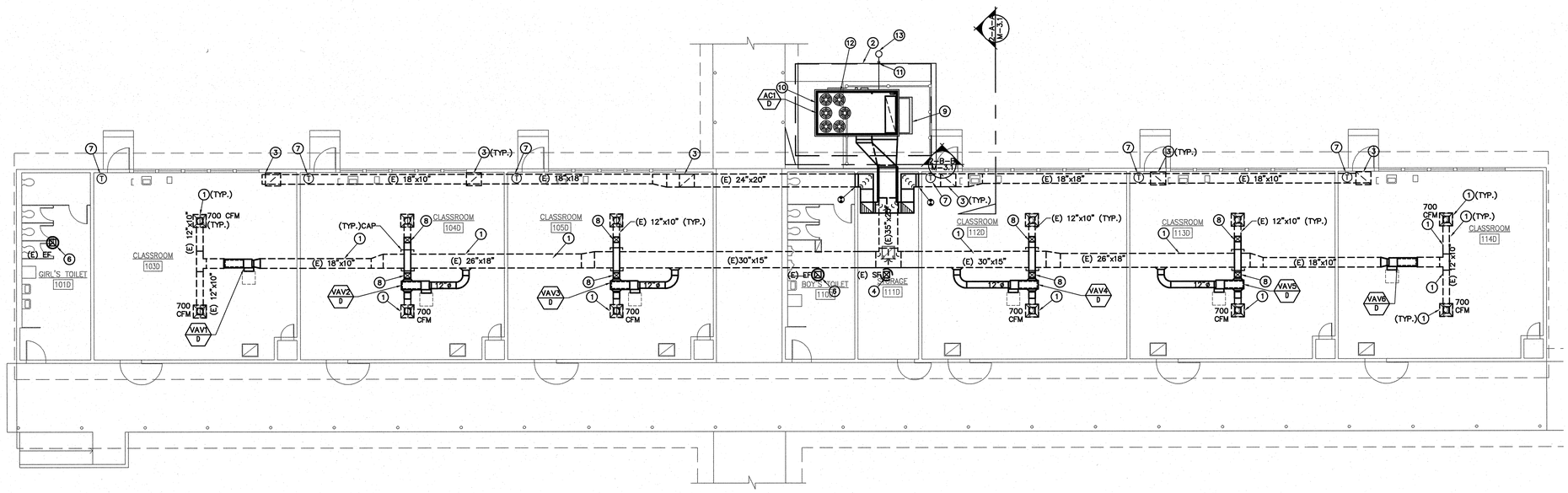

CONSTRUCTION KEY NOTES:

1. EXISTING MAIN SUPPLY DUCTWORK AND SUPPLY AIR DIFFUSERS TO REMAIN.SEE SHEET #2,#3, AND #4/M-4.1 FOR CEILING DIFFUSER AND DUCT SUPPORT DETAIL.
2. NEW FENCE AND CONCRETE PAD.
3. EXISTING MAIN RETURN DUCT AND GRILLES TO REMAIN.SEE SHEET #2,#3, AND #4/M-4.1 FOR CEILING DIFFUSER AND DUCT SUPPORT DETAIL.
4. EXISTING SUPPLY FAN AND DUCTWORK TO REMAIN.
5. CONTRACTOR TO USE M.W. SAUSSE & CO.,INC CURB AND CALCS. SEE SHEET M-4.4.
6. EXISTING EXHAUST FAN AND DUCTWORK TO REMAIN.
7. ELECTRONIC EMS THERMOSTAT MOUNT AT 48" A.F.F. SEE DETAIL SHEET #7/M-4.1 FOR A/C CONTROL.
8. CONTRACTOR TO OFFSET NEW (W) 12"X10" DUCT ABOVE MAIN SUPPLY DUCT.
9. POWER EXHAUST MOUNTED ON THE AC UNIT.
10. NEW AC UNIT AND CURB WILL BE ON CONCRETE PAD. SEE DETAIL SHEET # 9/M-4.1 FOR PAD.
11. ¾" CONDENSATE DRAIN TO DRYWELL. PROVIDE NEW VENTED P-TRAP IF NECESSARY.
12. CONTRACTOR TO PROVIDE EXTENSION ON GAS PIPING AS REQUIRED TO RECONNECT EXISTING GAS PIPING TO NEW AC UNIT.
12. NEW DRY WELL. SEE DETAIL SHEET #5/M-4.1.

CONSTRUCTION NOTES:

1. CONTRACTOR SHALL COORDINATE WORK WITH OTHER TRADES AS NECESSARY PRIOR TO INSTALLATION.
2. CONTRACTOR SHALL MAINTAIN PROPER CLEARANCES FROM ALL ELECTRICAL EQUIPMENT AND SERVICE CLEARANCES FOR MECHANICAL EQUIPMENT.
3. FRESH AIR INTAKES SHALL BE 10'-0" MIN. AWAY FROM ALL EXHAUST OUTLETS, PLUMBING VENTS, AND FLUES.
4. CONTRACTOR SHALL COORDINATE EXACT EQUIPMENT PAD SIZES AND LOCATIONS WITH OTHER TRADES PRIOR TO INSTALLATION.
5. MAINTAIN MANUFACTURER MIN. CLEARANCES ON ALL AC UNITS.
6. BEFORE BIDDING ON THIS WORK, THE CONTRACTOR SHALL MAKE A CAREFUL EXAMINATION OF THE PREMISES, EXISTING EQUIPMENT AND SERVICES. HE SHALL DEFINITELY DETERMINE IN ADVANCE, THE METHODS OF INSTALLING AND CONNECTING THE NEW EQUIPMENT, DUCTWORK, AND PIPING THE MEANS TO BE PROVIDED FOR GETTING THE EQUIPMENT AND MATERIALS INTO PLACE AND SHALL MAKE HIMSELF THOROUGHLY FAMILIAR WITH ALL OF THE REQUIREMENTS OF THE PROJECT. FAILURE TO VISIT THE SITE WILL IN NO WAY RELIEVE THE SUCCESSFUL CONTRACTOR OF THE NECESSITY OF FURNISHING ANY MATERIAL OR PERFORMING ANY WORK THAT MAY BE REQUIRED TO COMPLETE THE WORK IN ACCORDANCE WITH THE DRAWINGS AND SPECIFICATIONS. THIS ADDITIONAL WORK SHALL BE PERFORMED WITHOUT ADDITIONAL COST TO THE OWNER.
7. BEFORE COMMENCEMENT OF WORK, THE CONTRACTOR SHALL VERIFY THE EXACT LOCATIONS AND DIMENSIONS OF ALL EXISTING EQUIPMENT AND ELECTRICAL SERVICES IN THE AREA OF CONSTRUCTION AND NOTIFY THE ENGINEER OF ANY DISCREPANCIES.
8. ALL NEW EXPOSED SHEET METAL DUCTWORK, SHEET METAL CURB / PLATFORM AND DUCT SUPPORT SHALL BE PREPARED AND PAINTED PER DISTRICT STANDARDS.

NORTH

BUILDING D - REMODEL FLOOR PLAN | 1/8" = 1'-0" | 1

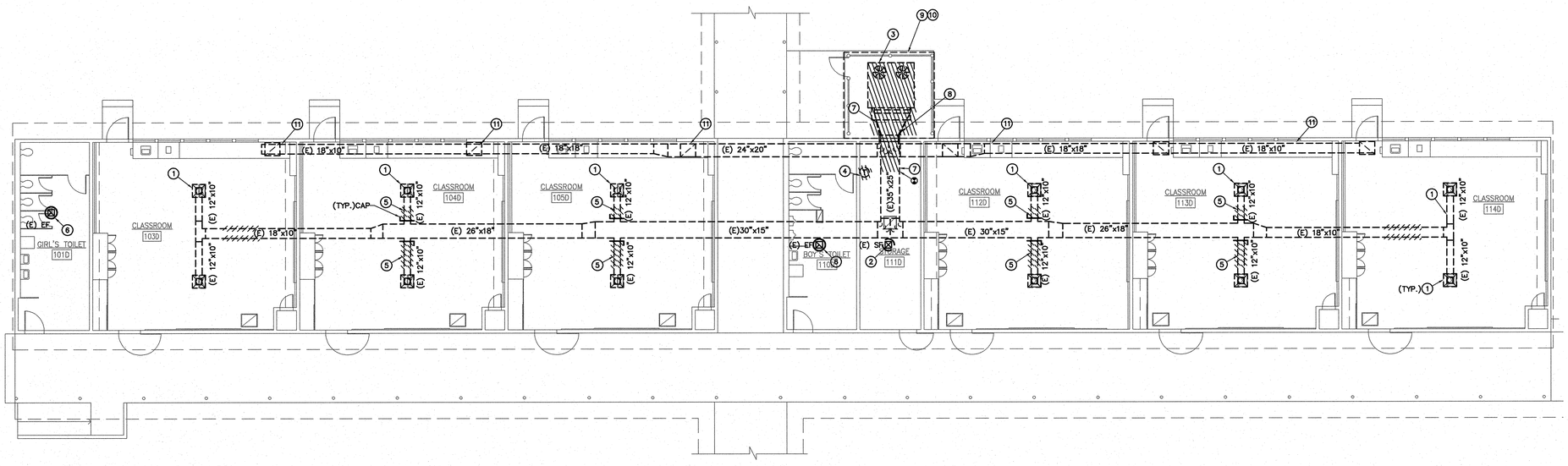

DEMOLITION KEY NOTES:

1. EXISTING MAIN SUPPLY DUCTWORK AND SUPPLY AIR DIFFUSERS TO REMAIN.
2. EXISTING SUPPLY FAN AND DUCTWORK TO REMAIN.
3. EXISTING AC UNIT, AC UNIT CURB AND RELATED ACCESSORIES TO BE REMOVED AND REPLACED WITH NEW AC UNIT.
4. EXISTING T-STAT TO BE REMOVED.
5. PARTIAL EXISTING SUPPLY AIR DUCT AND EXISTING MANUAL VOLUME DAMPER TO BE REMOVED. CAP UNUSED DUCT OPENING.
6. EXISTING EXHAUST FAN AND DUCTWORK TO REMAIN.
7. EXISTING 30"X25" MAIN SUPPLY AIR DUCT TO BE REMOVED AND REPLACED.
8. EXISTING 35"X25" RETURN DUCT TO BE REMOVED AND REPLACED.
9. EXISTING CONCRETE PAD TO BE REMOVED AND REPLACED WITH A NEW PAD.
10. EXISTING FENCE TO BE REMOVED AND REPLACED WITH A NEW FENCE AT A NEW LOCATION.
11. EXISTING MAIN RETURN DUCT AND AIR GRILLES TO REMAIN.

GENERAL DEMOLITION NOTES

1. OWNER SHALL HAVE FIRST RIGHT OF REFUSAL ON ALL ITEMS TO BE REMOVED.CONTRACTOR SHALL VERIFY ALL SUCH ITEMS WITH OWNER PRIOR TO REMOVAL. ALL ITEMS NOT REFUSED BY OWNER SHALL BE REMOVED INTACT AND FULLY FUNCTIONAL BY REFUSED BY OWNER SHALL BE PROPERLY DISPOSED OF BY CONTRACTOR.
2. CONTRACTOR SHALL RE-USE EXISTING OPENINGS IN WALLS AND ROOF WHEREVER POSSIBLE. COORDINATE WITH OTHER TRADES AS NECESSARY. GENERAL CONTRACTOR SHALL MODIFY OPENING AS REQUIRED TO ACCOMMODATE NEW MECHANICAL DEVICE.
3. GENERAL CONTRACTOR SHALL PATCH ALL OPENINGS IN WALLS, ROOF, ETC. THAT WILL NOT BE REUSED FOR FUTURE WORK. COORDINATE AS NECESSARY WITH OTHER TRADES.
4. CONTRACTOR SHALL COORDINATE WITH OWNER PRIOR TO ANY WORK BEING DONE STORAGE OF MECHANICAL EQUIPMENT TO BE RE-USED DURING CONSTRUCTION.
5. PRIOR TO ANY WORK BEING DONE CONTRACTOR SHALL MAKE A CAREFUL EVALUATION OF THE EXISTING CONDITIONS AND VERIFY ALL METHODS OF REMOVAL AND INSTALLATION OF MECHANICAL EQUIPMENT.
6. CONTRACTOR SHALL COORDINATE ALL DEMOLITION WORK WITH THE WORK OF ALL OTHER TRADES.
7. CONTRACTOR SHALL CLEAN ALL AIR DEVICES AND DUCTWORK TO REMAIN PER SPECIFICATIONS.
8. CONTRACTOR SHALL CLEAN ALL EXISTING DUCTWORK INCLUDING LINED DUCTWORK TO REMAIN PER SPECIFICATIONS. PRIOR TO BID AND BEFORE COMMENCEMENT OF ANY WORK ALL EXISTING DUCTWORK TO REMAIN SHALL BE CONFIRMED ON SITE.

NORTH

BUILDING D - DEMOLITION FLOOR PLAN | 1/8" = 1'-0" | 2

WLC ARCHITECTS
CLIENT FOCUSED • PASSION DRIVEN

SOUTHERN CALIFORNIA
8163 ROCHESTER AVENUE, SUITE 100
RANCHO CUCAMONGA
CALIFORNIA 91730-0729
TEL: 909-987-0909
www.wlcarchitects.com

LONGFELLOW ELEMENTARY SCHOOL HVAC REPLACEMENT

COMPTON UNIFIED SCHOOL DISTRICT
1101 S DWIGHT AVE.
COMPTON, CA 90220

LICENSED ARCHITECT — MARK GRAHAM — C-26046 — 03-31-19 — STATE OF CALIFORNIA

REGISTERED PROFESSIONAL ENGINEER — BRIAN BAMERAS — No. M29253 — Exp. 6/30/19 — MECHANICAL — STATE OF CALIFORNIA

CONSULTANT

FILE: 19-23

IDENTIFICATION STAMP
DIV. OF THE STATE ARCHITECT
OFFICE OF REGULATION SERVICES
APPL 03-118423
AC ___ FLS ___ SS IEY
DATE MAR 0 8 2018

NO	DATE	BY	DESCRIPTION
1			REVISIONS

DRAWN: KC	CHECKED:
DATE: 3/6/2018	SCALE:
PROJECT NUMBER: 570064	

BUILDING D DEMO AND REMODEL FLOOR PLANS

DRAWING NUMBER: M-2.2

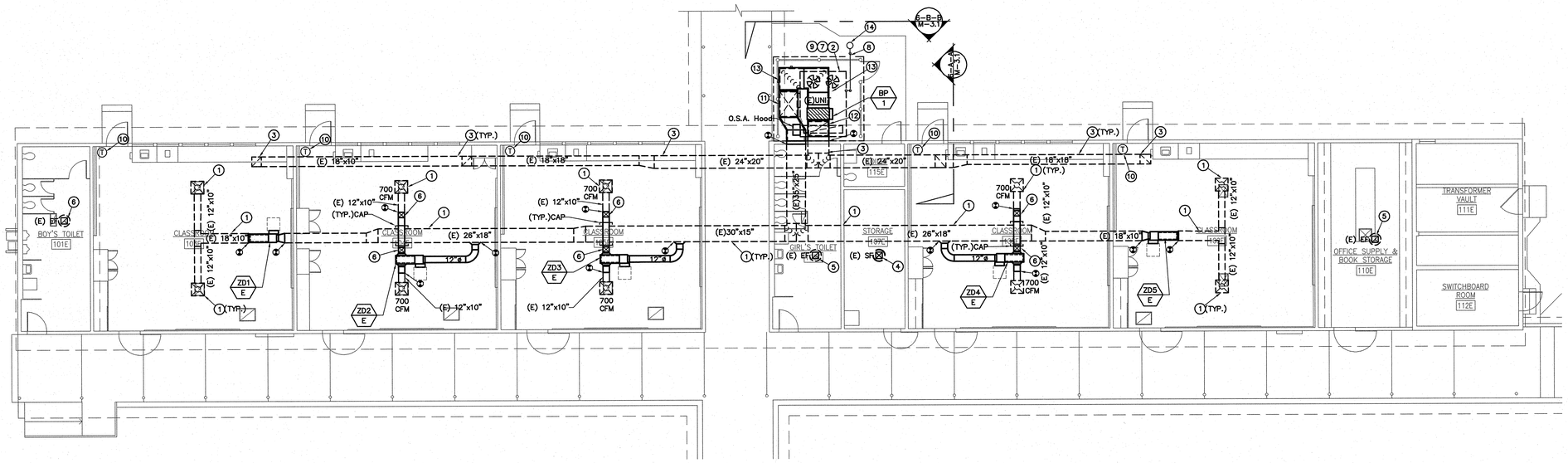

BUILDING E - REMODEL FLOOR PLAN | 1/8" = 1'-0" | 1

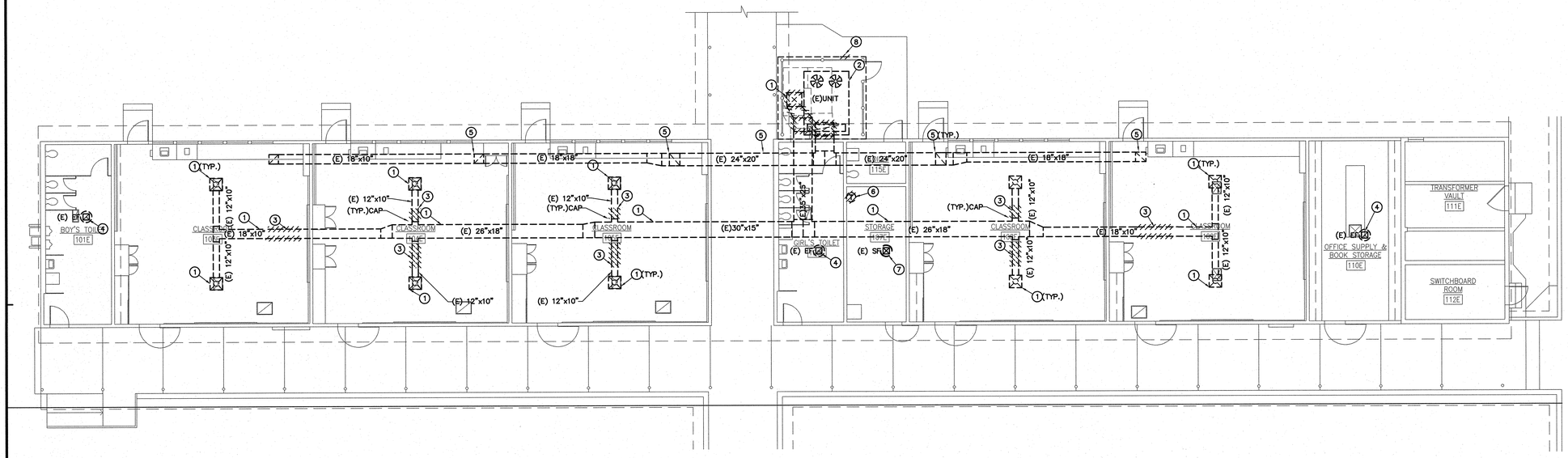

BUILDING E - DEMOLITION FLOOR PLAN | 1/8" = 1'-0" | 2

CONSTRUCTION KEY NOTES:

1. EXISTING MAIN SUPPLY DUCTWORK AND SUPPLY AIR DIFFUSERS TO REMAIN.SEE SHEET #2,#3, AND #4/M-4.1 FOR CEILING DIFFUSER AND DUCT SUPPORT DETAIL.
2. EXISTING UNIT TO REMIAN
3. EXISTING MAIN RETURN DUCT AND GRILLES TO REMAIN.SEE SHEET #2,#3, AND #4/M-4.1 FOR CEILING DIFFUSER AND DUCT SUPPORT DETAIL.
4. EXISTING SUPPLY FAN AND DUCTWORK TO REMAIN.
5. EXISTING EXHAUST FAN AND DUCTWORK TO REMAIN.
6. CONTRACTOR TO OFFSET NEW (W) 12"x10" DUCT ABOVE MAIN SUPPLY DUCT.
7. CONTRACTOR TO PROVIDE EXTENSION ON GAS PIPING TO EXISTING .
8. CONTRACTOR TO PROVIDE AN EXTENSION ON CONDENSATE PIPING TO DRYWELL. PROVIDE NEW VENTED P-TRAP WHERE NECESSARY.
9. CONTRACTOR TO PROVIDE O.S.A. AND RETURN DAMPER IF EXISTING UNIT DOES NOT HAVE ONE.
10. ELECTRONIC EMS THERMOSTAT MOUNT AT 48" A.F.F. SEE DETAIL SHEET #7/M-4.1 FOR A/C CONTROL.
11. NEW 36"x28" (L) 40"x32" SUPPLY DUCT. CONTRACTOR TO PROVIDE CONNECTION TO EXISTING SUPPLY DUCT.
12. NEW 36"x28" (L) 40"x30" SUPPLY DUCT.
13. NEW 36"x12" (L) 40"x16" DUCT TO BE DUCTED TO BYPASS DAMPER AND SUPPLY DUCT.
14. NEW DRYWELL. SEE DETAIL SHEET #5/M-4.1.

CONSTRUCTION NOTES:

1. CONTRACTOR SHALL COORDINATE WORK WITH OTHER TRADES AS NECESSARY PRIOR TO INSTALLATION.
2. CONTRACTOR SHALL MAINTAIN PROPER CLEARANCES FROM ALL ELECTRICAL EQUIPMENT AND SERVICE CLEARANCES FOR MECHANICAL EQUIPMENT.
4. FRESH AIR INTAKES SHALL BE 10'-0" MIN. AWAY FROM ALL EXHAUST OUTLETS, PLUMBING VENTS, AND FLUES.
5. CONTRACTOR SHALL COORDINATE EXACT EQUIPMENT PAD SIZES AND LOCATIONS WITH OTHER TRADES PRIOR TO INSTALLATION.
6. MAINTAIN MANUFACTURER MIN. CLEARANCES ON ALL AC UNITS.
7. BEFORE BIDDING ON THIS WORK, THE CONTRACTOR SHALL MAKE A CAREFUL EXAMINATION OF THE PREMISES, EXISTING EQUIPMENT AND SERVICES. HE SHALL DEFINITELY DETERMINE IN ADVANCE, THE METHODS OF INSTALLING AND CONNECTING THE NEW EQUIPMENT, DUCTWORK, AND PIPING THE MEANS TO BE PROVIDED FOR GETTING THE EQUIPMENT AND MATERIALS INTO PLACE AND SHALL MAKE HIMSELF THOROUGHLY FAMILIAR WITH ALL OF THE REQUIREMENTS OF THE PROJECT. FAILURE TO VISIT THE SITE WILL IN NO WAY RELIEVE THE SUCCESSFUL CONTRACTOR OF THE NECESSITY OF FURNISHING ANY MATERIAL OR PERFORMING ANY WORK THAT MAY BE REQUIRED TO COMPLETE THE WORK IN ACCORDANCE WITH THE DRAWINGS AND SPECIFICATIONS. THIS ADDITIONAL WORK SHALL BE PERFORMED WITHOUT ADDITIONAL COST TO THE OWNER.
8. BEFORE COMMENCEMENT OF WORK, THE CONTRACTOR SHALL VERIFY THE EXACT LOCATIONS AND DIMENSIONS OF ALL EXISTING EQUIPMENT AND ELECTRICAL SERVICES IN THE AREA OF CONSTRUCTION AND NOTIFY THE ENGINEER OF ANY DISCREPANCIES.
9. ALL NEW EXPOSED SHEET METAL DUCTWORK, SHEET METAL CURB / PLATFORM AND DUCT SUPPORT SHALL BE PREPARED AND PAINTED PER DISTRICT STANDARDS.

NORTH

DEMOLITION KEY NOTES:

1. EXISTING MAIN SUPPLY DUCTWORK AND SUPPLY AIR DIFFUSERS TO REMAIN.
2. EXISTING AC UNIT, AC UNIT CURB AND RELATED ACCESSORIES TO REMAIN.
3. PARTIAL EXISTING SUPPLY AIR DUCT AND EXISTING MANUAL VOLUME DAMPER TO BE REMOVED. CAP UNUSED DUCT OPENING.
4. EXISTING EXHAUST FAN AND DUCTWORK TO REMAIN.
5. EXISTING MAIN RETURN DUCT AND AIR GRILLES TO REMAIN.
6. EXISTING TSTAT TO BE REMOVED.
7. EXISTING SUPPLY FAN AND DUCTWORK TO REMAIN.
8. PORTION OF EXISTING UNIT PAD TO BE DEMO FOR CONDENSATE ROUTING TO DRYWELL.

GENERAL DEMOLITION NOTES

1. OWNER SHALL HAVE FIRST RIGHT OF REFUSAL ON ALL ITEMS TO BE REMOVED.CONTRACTOR SHALL VERIFY ALL SUCH ITEMS WITH OWNER PRIOR TO REMOVAL. ALL ITEMS NOT REFUSED BY OWNER SHALL BE REMOVED INTACT AND FULLY FUNCTIONAL BY REFUSED BY OWNER SHALL BE PROPERLY DISPOSED OF BY CONTRACTOR.
2. CONTRACTOR SHALL RE-USE EXISTING OPENINGS IN WALLS AND ROOF WHEREVER POSSIBLE. COORDINATE WITH OTHER TRADES AS NECESSARY. GENERAL CONTRACTOR SHALL MODIFY OPENING AS REQUIRED TO ACCOMMODATE NEW MECHANICAL DEVICE.
3. GENERAL CONTRACTOR SHALL PATCH ALL OPENINGS IN WALLS, ROOF, ETC. THAT WILL NOT BE REUSED FOR FUTURE WORK. COORDINATE AS NECESSARY WITH OTHER TRADES.
4. CONTRACTOR SHALL COORDINATE WITH OWNER PRIOR TO ANY WORK BEING DONE STORAGE OF MECHANICAL EQUIPMENT TO BE RE-USED DURING CONSTRUCTION.
5. PRIOR TO ANY WORK BEING DONE CONTRACTOR SHALL MAKE A CAREFUL EVALUATION OF THE EXISTING CONDITIONS AND VERIFY ALL METHODS OF REMOVAL AND INSTALLATION OF MECHANICAL EQUIPMENT.
6. CONTRACTOR SHALL COORDINATE ALL DEMOLITION WORK WITH THE WORK OF ALL OTHER TRADES.
7. CONTRACTOR SHALL CLEAN ALL AIR DEVICES AND DUCTWORK TO REMAIN PER SPECIFICATIONS.
8. CONTRACTOR SHALL CLEAN ALL EXISTING DUCTWORK INCLUDING LINED DUCTWORK TO REMAIN PER SPECIFICATIONS. PRIOR TO BID AND BEFORE COMMENCEMENT OF ANY WORK ALL EXISTING DUCTWORK TO REMAIN SHALL BE CONFIRMED ON SITE.

NORTH

WLC ARCHITECTS
CLIENT FOCUSED • PASSION DRIVEN

SOUTHERN CALIFORNIA
8163 ROCHESTER AVENUE, SUITE 100
RANCHO CUCAMONGA
CALIFORNIA 91730-0729
TEL: 909-987-0909
www.wlcarchitects.com

LONGFELLOW ELEMENTARY SCHOOL HVAC REPLACEMENT

COMPTON UNIFIED SCHOOL DISTRICT
1101 S DWIGHT AVE.
COMPTON, CA 90220

LICENSED ARCHITECT MARK GRAHAM C-26046 03-31-19 STATE OF CALIFORNIA

REGISTERED PROFESSIONAL ENGINEER JEFF BAKER No. M29253 Exp. 6/30/19 MECHANICAL STATE OF CALIFORNIA

CONSULTANT

IDENTIFICATION STAMP DIV. OF THE STATE ARCHITECT OFFICE OF REGULATION SERVICES
APPL 03-118423
AC FLS SS EY
DATE NOV 0 2018
FILE: 19-23

NO	DATE	BY	DESCRIPTION
			REVISIONS

DRAWN: KC	CHECKED:
DATE: 3/6/2018	SCALE:
PROJECT NUMBER: 570064	

BUILDING E DEMO AND REMODEL FLOOR PLANS

DRAWING NUMBER: M-2.3

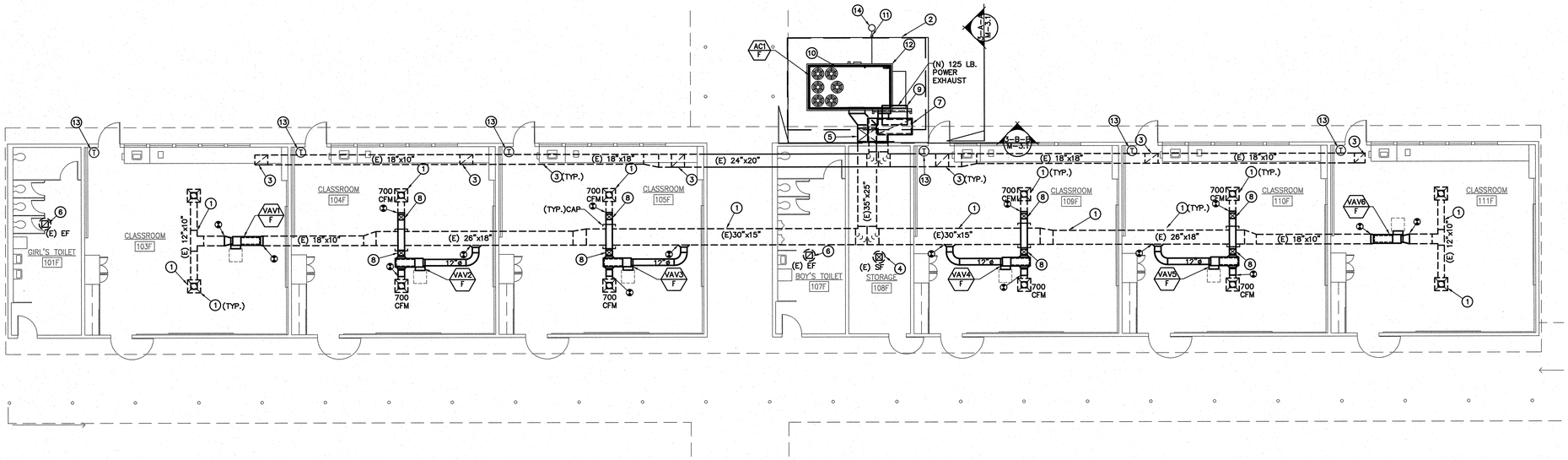

CONSTRUCTION KEY NOTES:

1. EXISTING MAIN SUPPLY DUCTWORK AND SUPPLY AIR DIFFUSERS TO REMAIN.SEE SHEET #2,#3, AND #4/M-4.1 FOR CEILING DIFFUSER AND DUCT SUPPORT DETAIL.
2. NEW FENCE AND CONCRETE PAD.
3. EXISTING MAIN RETURN DUCT AND GRILLES TO REMAIN.SEE SHEET #2,#3, AND #4/M-4.1 FOR CEILING DIFFUSER AND DUCT SUPPORT DETAIL.
4. EXISTING SUPPLY FAN AND DUCTWORK TO REMAIN.
5. NEW 35"X25"(L) SUPPLY AIR DUCT. 40"X28" SHEET METAL SIZES. SEE STRUCTURAL SHEET #1/S2.1.
6. EXISTING EXHAUST FAN AND DUCTWORK TO REMAIN.
7. NEW 60"X26"(L) RETURN AIR DUCT. 64"X30" SHEET METAL SIZES. SEE STRUCTURAL SHEET #1/S2.1.
8. CONTRACTOR TO OFFSET NEW (W) 12"X10" DUCT ABOVE MAIN SUPPLY DUCT.
9. POWER EXHAUST MOUNTED ON THE NEW RETURN DUCT. SEE STRUCTURAL SHEET #1/S2.1.
10. NEW AC UNIT WILL BE ON CONCRETE PAD. SEE DETAIL SHEET #10/M-4.1 FOR PAD.
11. 3/4" CONDENSATE DRAIN TO DRYWELL. PROVIDE NEW VENTED P-TRAP IF NECESSARY.
12. CONTRACTOR TO PROVIDE EXTENSION ON GAS PIPING AS REQUIRED TO RECONNECT EXISTING GAS PIPING TO NEW AC UNIT.
13. ELECTRONIC EMS THERMOSTAT MOUNT AT 48" A.F.F. SEE DETAIL SHEET #7/M-4.1 FOR A/C CONTROL.
14. NEW DRY WELL. SEE DETAIL SHEET #5/M-4.1.

CONSTRUCTION NOTES:

1. CONTRACTOR SHALL COORDINATE WORK WITH OTHER TRADES AS NECESSARY PRIOR TO INSTALLATION.
2. CONTRACTOR SHALL MAINTAIN PROPER CLEARANCES FROM ALL ELECTRICAL EQUIPMENT AND SERVICE CLEARANCES FOR MECHANICAL EQUIPMENT.
4. FRESH AIR INTAKES SHALL BE 10'-0" MIN. AWAY FROM ALL EXHAUST OUTLETS, PLUMBING VENTS, AND FLUES.
5. CONTRACTOR SHALL COORDINATE EXACT EQUIPMENT PAD SIZES AND LOCATIONS WITH OTHER TRADES PRIOR TO INSTALLATION.
6. MAINTAIN MANUFACTURER MIN. CLEARANCES ON ALL AC UNITS.
7. BEFORE BIDDING ON THIS WORK, THE CONTRACTOR SHALL MAKE A CAREFUL EXAMINATION OF THE PREMISES, EXISTING EQUIPMENT AND SERVICES. HE SHALL DEFINITELY DETERMINE IN ADVANCE, THE METHODS OF INSTALLING AND CONNECTING THE NEW EQUIPMENT, DUCTWORK, AND PIPING THE MEANS TO BE PROVIDED FOR GETTING THE EQUIPMENT AND MATERIALS INTO PLACE AND SHALL MAKE HIMSELF THOROUGHLY FAMILIAR WITH ALL OF THE REQUIREMENTS OF THE PROJECT. FAILURE TO VISIT THE SITE WILL IN NO WAY RELIEVE THE SUCCESSFUL CONTRACTOR OF THE NECESSITY OF FURNISHING ANY MATERIAL OR PERFORMING ANY WORK THAT MAY BE REQUIRED TO COMPLETE THE WORK IN ACCORDANCE WITH THE DRAWINGS AND SPECIFICATIONS. THIS ADDITIONAL WORK SHALL BE PERFORMED WITHOUT ADDITIONAL COST TO THE OWNER.
8. BEFORE COMMENCEMENT OF WORK, THE CONTRACTOR SHALL VERIFY THE EXACT LOCATIONS AND DIMENSIONS OF ALL EXISTING EQUIPMENT AND ELECTRICAL SERVICES IN THE AREA OF CONSTRUCTION AND NOTIFY THE ENGINEER OF ANY DISCREPANCIES.
9. ALL NEW EXPOSED SHEET METAL DUCTWORK, SHEET METAL CURB / PLATFORM AND DUCT SUPPORT SHALL BE PREPARED AND PAINTED PER DISTRICT STANDARDS.

NORTH

BUILDING F - REMODEL FLOOR PLAN | 1/8" = 1'-0" | 1

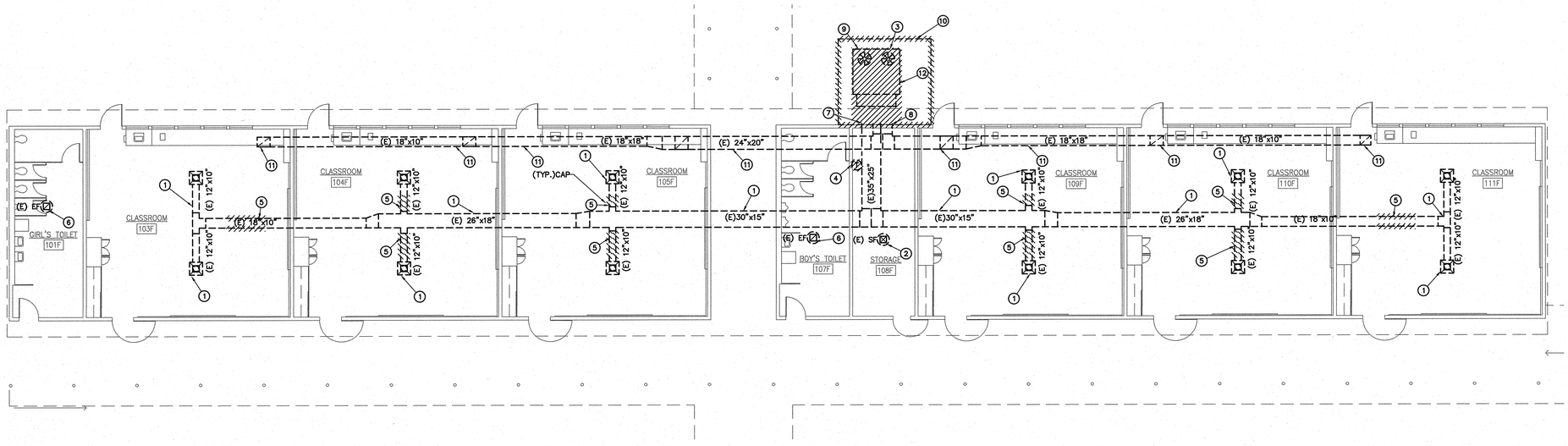

DEMOLITION KEY NOTES:

1. EXISTING MAIN SUPPLY DUCTWORK AND SUPPLY AIR DIFFUSERS TO REMAIN.
2. EXISTING SUPPLY FAN AND DUCTWORK TO REMAIN.
3. EXISTING AC UNIT, AC UNIT CURB AND RELATED ACCESSORIES TO BE REMOVED AND REPLACED WITH NEW AC UNIT.
4. EXISTING T-STAT TO BE REMOVED.
5. PARTIAL EXISTING SUPPLY AIR DUCT AND EXISTING MANUAL VOLUME DAMPER TO BE REMOVED. CAP UNUSED DUCT OPENING.
6. EXISTING EXHAUST FAN AND DUCTWORK TO REMAIN.
7. EXISTING 30"X25" MAIN SUPPLY AIR DUCT TO BE REMOVED AND REPLACED.
8. EXISTING 35"X25" RETURN DUCT TO BE REMOVED AND REPLACED.
9. EXISTING CONCRETE PAD TO BE REMOVED AND REPLACED WITH A NEW PAD.
10. EXISTING FENCE TO BE REMOVED AND REPLACED WITH A NEW FENCE AT A NEW LOCATION.
11. EXISTING MAIN RETURN DUCT AND AIR GRILLES TO REMAIN.
12. EXISTING AC UNIT CURB AND RELATED ACCESSORIES TO BE REMOVED AND REPLACED WITH NEW.

GENERAL DEMOLITION NOTES

1. OWNER SHALL HAVE FIRST RIGHT OF REFUSAL ON ALL ITEMS TO BE REMOVED.CONTRACTOR SHALL VERIFY ALL SUCH ITEMS WITH OWNER PRIOR TO REMOVAL. ALL ITEMS NOT REFUSED BY OWNER SHALL BE REMOVED INTACT AND FULLY FUNCTIONAL BY REFUSED BY OWNER SHALL BE PROPERLY DISPOSED OF BY CONTRACTOR.
2. CONTRACTOR SHALL RE-USE EXISTING OPENINGS IN WALLS AND ROOF WHEREVER POSSIBLE. COORDINATE WITH OTHER TRADES AS NECESSARY. GENERAL CONTRACTOR SHALL MODIFY OPENING AS REQUIRED TO ACCOMMODATE NEW MECHANICAL DEVICE.
3. GENERAL CONTRACTOR SHALL PATCH ALL OPENINGS IN WALLS, ROOF, ETC. THAT WILL NOT BE REUSED FOR FUTURE WORK. COORDINATE AS NECESSARY WITH OTHER TRADES.
4. CONTRACTOR SHALL COORDINATE WITH OWNER PRIOR TO ANY WORK BEING DONE STORAGE OF MECHANICAL EQUIPMENT TO BE RE-USED DURING CONSTRUCTION.
5. PRIOR TO ANY WORK BEING DONE CONTRACTOR SHALL MAKE A CAREFUL EVALUATION OF THE EXISTING CONDITIONS AND VERIFY ALL METHODS OF REMOVAL AND INSTALLATION OF MECHANICAL EQUIPMENT.
6. CONTRACTOR SHALL COORDINATE ALL DEMOLITION WORK WITH THE WORK OF ALL OTHER TRADES.
7. CONTRACTOR SHALL CLEAN ALL AIR DEVICES AND DUCTWORK TO REMAIN PER SPECIFICATIONS.
8. CONTRACTOR SHALL CLEAN ALL EXISTING DUCTWORK INCLUDING LINED DUCTWORK TO REMAIN PER SPECIFICATIONS. PRIOR TO BID AND BEFORE COMMENCEMENT OF ANY WORK ALL EXISTING DUCTWORK TO REMAIN SHALL BE CONFIRMED ON SITE.

NORTH

BUILDING F - DEMOLITION FLOOR PLAN | 1/8" = 1'-0" | 2

ARCHITECTS
WLC
CLIENT FOCUSED • PASSION DRIVEN

SOUTHERN CALIFORNIA
8163 ROCHESTER AVENUE, SUITE 100
RANCHO CUCAMONGA
CALIFORNIA 91730-0729

TEL: 909-987-0909
www.wlcarchitects.com

LONGFELLOW ELEMENTARY SCHOOL HVAC REPLACEMENT

COMPTON UNIFIED SCHOOL DISTRICT
1101 S DWIGHT AVE.
COMPTON, CA 90220

LICENSED ARCHITECT MARK GRAHAM C-26046 03-31-19 STATE OF CALIFORNIA

REGISTERED PROFESSIONAL ENGINEER BAKERJIAN No. M28253 Exp. 6/30/19 MECHANICAL STATE OF CALIFORNIA

CONSULTANT

IDENTIFICATION STAMP DIV. OF THE STATE ARCHITECT OFFICE OF REGULATION SERVICES
APPL 03-118423
AC — FLS — SS — EY
DATE MAY 0 9 2019
FILE: 19-23

NO	DATE	BY	DESCRIPTION
1			REVISIONS

DRAWN: KC	CHECKED:
DATE: 3/6/2018	SCALE:
PROJECT NUMBER: 570064	

BUILDING F DEMO AND REMODEL FLOOR PLANS

DRAWING NUMBER: M-2.4

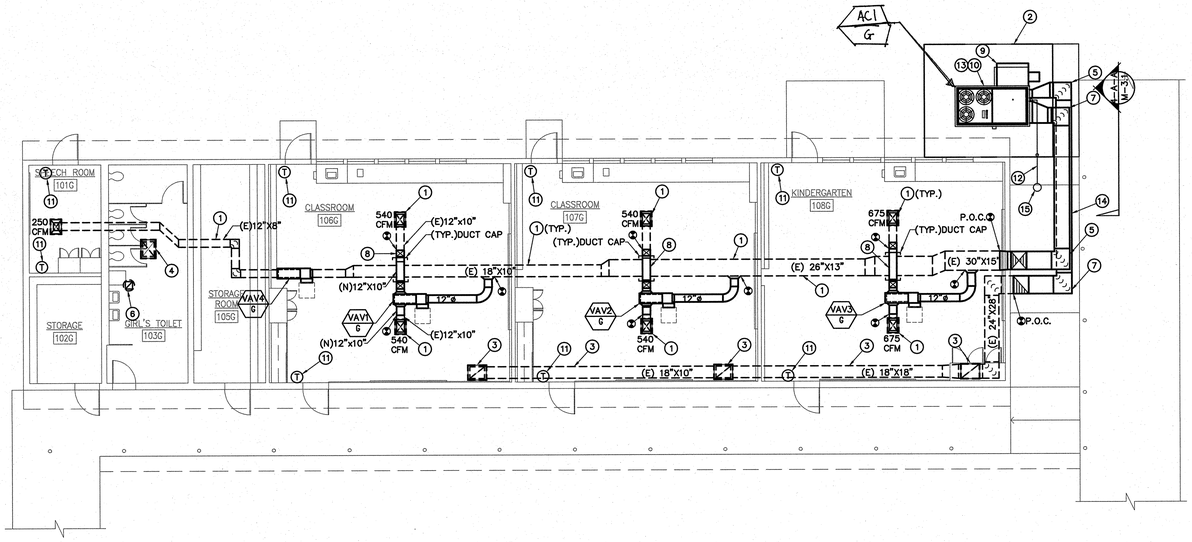

CONSTRUCTION KEY NOTES:

1. EXISTING MAIN SUPPLY DUCTWORK AND SUPPLY AIR DIFFUSERS TO REMAIN.SEE SHEET #2,#3, AND #4/M-4.1 FOR CEILING DIFFUSER AND DUCT SUPPORT DETAIL.
2. NEW FENCE AND CONCRETE PAD. SEE ARCHITECT SHEET FOR MORE DETAILS.
3. EXISTING MAIN RETURN DUCT AND GRILLES TO REMAIN.SEE SHEET #2,#3, AND #4/M-4.1 FOR CEILING DIFFUSER AND DUCT SUPPORT DETAIL.
4. EXISTING MAKE UP AIR HOOD AND DUCTWORK TO REMAIN.
5. NEW 24"X20"(L) SUPPLY AIR DUCT ON TOP. 28"X24" SHEET METAL SIZES. SEE STRUCTURAL SHEET DETAIL #3/S2.1 FOR DUCT SUPPORT.
6. EXISTING EXHAUST FAN AND DUCTWORK TO REMAIN.
7. NEW 24"X20"(L) RETURN AIR DUCT ON BOTTOM. 28"X24" SHEET METAL SIZES. SEE STRUCTURAL SHEET DETAIL #3/S2.1 FOR DUCT SUPPORT.
8. CONTRACTOR TO OFFSET NEW (W) 12"X10" DUCT ABOVE MAIN EXISTING SUPPLY DUCT.
9. POWER EXHAUST MOUNTED ON THE AC UNIT.
10. AC UNIT WILL BE ON 14" FACTORY CURB FOR POWER EXHAUST. SEE SCHEDULE SHEET M-0.2 AC UNIT SCHEDULE REMARK # 6 FOR CURB.
11. ELECTRONIC EMS THERMOSTAT MOUNT AT 48" A.F.F. SEE DETAIL SHEET #7/M-4.1 FOR A/C CONTROL.
12. 3/4" CONDENSATE DRAIN TO DRY WELL. PROVIDE NEW VENTED P-TRAP IF NECESSARY.
13. CONTRACTOR TO PROVIDE EXTENSION ON GAS AND CONDENSATE PIPING TO NEW AC UNITS.
14. SEE STRUCTURAL SHEET DETAIL #3/S2.1 FOR DUCT SUPPORT.
15. NEW DRY WELL. SEE DETAIL SHEET #5/M-4.1.

CONSTRUCTION NOTES:

1. CONTRACTOR SHALL COORDINATE WORK WITH OTHER TRADES AS NECESSARY PRIOR TO INSTALLATION.
2. CONTRACTOR SHALL MAINTAIN PROPER CLEARANCES FROM ALL ELECTRICAL EQUIPMENT AND SERVICE CLEARANCES FOR MECHANICAL EQUIPMENT.
3. FRESH AIR INTAKES SHALL BE 10'-0" MIN. AWAY FROM ALL EXHAUST OUTLETS, PLUMBING VENTS, AND FLUES.
4. CONTRACTOR SHALL COORDINATE EXACT EQUIPMENT PAD SIZES AND LOCATIONS WITH OTHER TRADES PRIOR TO INSTALLATION.
5. MAINTAIN MANUFACTURER MIN. CLEARANCES ON ALL AC UNITS.
6. BEFORE BIDDING ON THIS WORK, THE CONTRACTOR SHALL MAKE A CAREFUL EXAMINATION OF THE PREMISES, EXISTING EQUIPMENT AND SERVICES. HE SHALL DEFINITELY DETERMINE IN ADVANCE, THE METHODS OF INSTALLING AND CONNECTING THE NEW EQUIPMENT, DUCTWORK, AND PIPING THE MEANS TO BE PROVIDED FOR GETTING THE EQUIPMENT AND MATERIALS INTO PLACE AND SHALL MAKE HIMSELF THOROUGHLY FAMILIAR WITH ALL OF THE REQUIREMENTS OF THE PROJECT. FAILURE TO VISIT THE SITE WILL IN NO WAY RELIEVE THE SUCCESSFUL CONTRACTOR OF THE NECESSITY OF FURNISHING ANY MATERIAL OR PERFORMING ANY WORK THAT MAY BE REQUIRED TO COMPLETE THE WORK IN ACCORDANCE WITH THE DRAWINGS AND SPECIFICATIONS. THIS ADDITIONAL WORK SHALL BE PERFORMED WITHOUT ADDITIONAL COST TO THE OWNER.
7. BEFORE COMMENCEMENT OF WORK, THE CONTRACTOR SHALL VERIFY THE EXACT LOCATIONS AND DIMENSIONS OF ALL EXISTING EQUIPMENT AND ELECTRICAL SERVICES IN THE AREA OF CONSTRUCTION AND NOTIFY THE ENGINEER OF ANY DISCREPANCIES.
8. ALL NEW EXPOSED SHEET METAL DUCTWORK, SHEET METAL CURB / PLATFORM AND DUCT SUPPORT SHALL BE PREPARED AND PAINTED PER DISTRICT STANDARDS.

NORTH

BUILDING G - REMODEL FLOOR PLAN | 1/8" = 1'-0" | 1

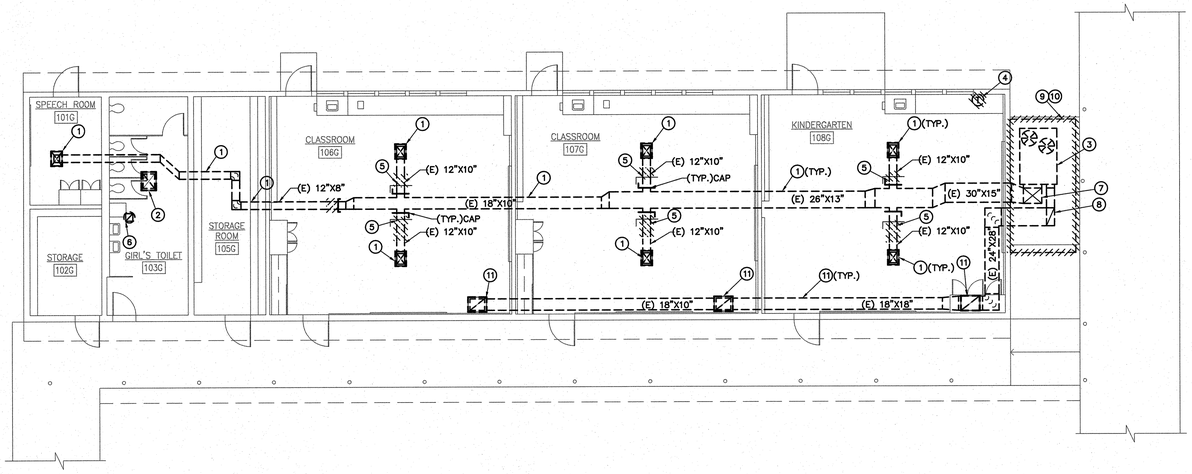

DEMOLITION KEY NOTES:

1. EXISTING MAIN SUPPLY DUCTWORK AND SUPPLY AIR DIFFUSERS TO REMAIN.
2. EXISTING MAKE UP AIR HOOD AND DUCTWORK TO REMAIN.
3. EXISTING AC UNIT, AC UNIT CURB AND RELATED ACCESSORIES TO BE REMOVED AND REPLACED WITH NEW AC UNIT.
4. EXISTING T-STAT TO BE REMOVED.
5. PARTIAL EXISTING SUPPLY AIR DUCT AND EXISTING MANUAL VOLUME DAMPER TO BE REMOVED. CAP UNUSED DUCT OPENING.
6. EXISTING EXHAUST FAN AND DUCTWORK TO REMAIN.
7. EXISTING 30"X15"(L) MAIN SUPPLY AIR DUCT TO BE REMOVED AND REPLACED.
8. EXISTING 24"X28" (L) RETURN DUCT TO BE REMOVED AND REPLACED.
9. EXISTING CONCRETE PAD TO BE REMOVED AND REPLACED WITH A NEW PAD.
10. EXISTING FENCE TO BE REMOVED AND REPLACED WITH A NEW FENCE. SEE ARCHITECT SHEET FOR MORE DETAILS.
11. EXISTING MAIN RETURN DUCT AND AIR GRILLES TO REMAIN.

GENERAL DEMOLITION NOTES

1. OWNER SHALL HAVE FIRST RIGHT OF REFUSAL ON ALL ITEMS TO BE REMOVED.CONTRACTOR SHALL VERIFY ALL SUCH ITEMS WITH OWNER PRIOR TO REMOVAL. ALL ITEMS NOT REFUSED BY OWNER SHALL BE REMOVED INTACT AND FULLY FUNCTIONAL BY REFUSED BY OWNER SHALL BE PROPERLY DISPOSED OF BY CONTRACTOR.
2. CONTRACTOR SHALL RE-USE EXISTING OPENINGS IN WALLS AND ROOF WHEREVER POSSIBLE. COORDINATE WITH OTHER TRADES AS NECESSARY. GENERAL CONTRACTOR SHALL MODIFY OPENING AS REQUIRED TO ACCOMMODATE NEW MECHANICAL DEVICE.
3. GENERAL CONTRACTOR SHALL PATCH ALL OPENINGS IN WALLS, ROOF, ETC. THAT WILL NOT BE REUSED FOR FUTURE WORK. COORDINATE AS NECESSARY WITH OTHER TRADES.
4. PRIOR TO ANY WORK BEING DONE CONTRACTOR SHALL MAKE A CAREFUL EVALUATION OF THE EXISTING CONDITIONS AND VERIFY ALL METHODS OF REMOVAL AND INSTALLATION OF MECHANICAL EQUIPMENT.
5. CONTRACTOR SHALL COORDINATE ALL DEMOLITION WORK WITH THE WORK OF ALL OTHER TRADES.
6. CONTRACTOR SHALL CLEAN ALL AIR DEVICES AND DUCTWORK TO REMAIN PER SPECIFICATIONS.
7. CONTRACTOR SHALL CLEAN ALL EXISTING DUCTWORK INCLUDING LINED DUCTWORK TO REMAIN PER SPECIFICATIONS. PRIOR TO BID AND BEFORE COMMENCEMENT OF ANY WORK ALL EXISTING DUCTWORK TO REMAIN SHALL BE CONFIRMED ON SITE.

NORTH

BUILDING G - DEMOLITION FLOOR PLAN | 1/8" = 1'-0" | 2

WLC ARCHITECTS
CLIENT FOCUSED • PASSION DRIVEN
SOUTHERN CALIFORNIA
8163 ROCHESTER AVENUE, SUITE 100
RANCHO CUCAMONGA
CALIFORNIA 91730-0729
TEL: 909-987-0909
www.wlcarchitects.com

LONGFELLOW ELEMENTARY SCHOOL HVAC REPLACEMENT

COMPTON UNIFIED SCHOOL DISTRICT
1101 S DWIGHT AVE.
COMPTON, CA 90220

LICENSED ARCHITECT MARK GRAHAM C-26546 03-31-19 STATE OF CALIFORNIA
REGISTERED PROFESSIONAL ENGINEER JAMES BARFIELD No. M29253 Exp. 6/30/19 MECHANICAL STATE OF CALIFORNIA

CONSULTANT

IDENTIFICATION STAMP DIV. OF THE STATE ARCHITECT OFFICE OF REGULATION SERVICES
APPL 03-118423
AC FLS SS EY
DATE MAR 05 2018
FILE: 19-23

NO	DATE	BY	DESCRIPTION
1			REVISIONS

DRAWN: KC | CHECKED:
DATE: 3/6/2018 | SCALE:
PROJECT NUMBER: 570064

BUILDING G DEMO AND REMODEL FLOOR PLANS

DRAWING NUMBER: M-2.5

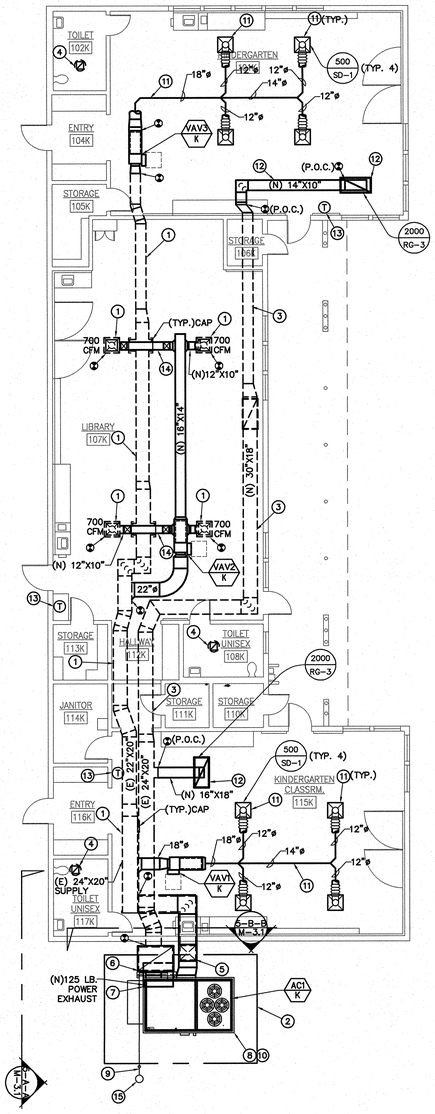

CONSTRUCTION KEY NOTES:

1. EXISTING MAIN SUPPLY DUCTWORK AND SUPPLY AIR DIFFUSERS TO REMAIN. SEE SHEET #2,#3, AND #4/M-4.1 FOR CEILING DIFFUSER AND DUCT SUPPORT DETAIL.
2. NEW FENCE AND CONCRETE PAD.
3. EXISTING MAIN RETURN DUCT AND GRILLES TO REMAIN.SEE SHEET #2,#3, AND #4/M-4.1 FOR CEILING DIFFUSER AND DUCT SUPPORT DETAIL.
4. EXISTING EXHAUST FAN AND DUCTWORK TO REMAIN.
5. NEW 24"X22"(L) SUPPLY AIR DUCT. 28"X26" SHEET METAL SIZES. SEE STRUCTURAL DETAIL SHEET #4/S2.1.
6. NEW 52"X36"(L) RETURN AIR DUCT. 56"X40" SHEET METAL SIZES. SEE STRUCTURAL DETAIL SHEET #4/S2.1.
7. POWER EXHAUST MOUNTED ON THE NEW RETURN DUCT. SEE STRUCTURAL DETAIL SHEET #4/S2.1.
8. NEW AC UNIT WILL BE ON CONCRETE PAD. SEE DETAIL SHEET 10/M-4.1 FOR PAD.
9. ¾" CONDENSATE DRAIN TO CONNECT TO NEW DRY WELL. PROVIDE NEW VENTED P-TRAP IF NECESSARY.
10. CONTRACTOR TO PROVIDE EXTENSION ON GAS AND CONDENSATE PIPING TO EXISTING . PROVIDE NEW VENTED P-TRAP WHERE NECESSARY.
11. NEW SUPPLY AIR DUCT AND DIFFUSER TO REPLACE EXISTING.SEE SHEET #2,#3, AND #4/M-4.1 FOR CEILING DIFFUSER AND DUCT SUPPORT DETAIL.
12. NEW RETURN DUCT AND GRILLE TO REPLACE EXISTING. SEE MECHANICAL DETAIL SHEET #4/M-4.1.
13. ELECTRONIC EMS THERMOSTAT MOUNT AT 48" A.F.F. SEE DETAIL SHEET #7/M-4.1 FOR A/C CONTROL.
14. CONTRACTOR TO OFFSET NEW (W) 12"X10" DUCT ABOVE MAIN SUPPLY DUCT. SEE MECHANICAL DETAIL SHEET.
15. NEW DRY WELL. SEE DETAIL SHEET #5/M-4.1.

CONSTRUCTION NOTES:

1. CONTRACTOR SHALL COORDINATE WORK WITH OTHER TRADES AS NECESSARY PRIOR TO INSTALLATION.
2. CONTRACTOR SHALL MAINTAIN PROPER CLEARANCES FROM ALL ELECTRICAL EQUIPMENT AND SERVICE CLEARANCES FOR MECHANICAL EQUIPMENT.
4. FRESH AIR INTAKES SHALL BE 10'-0" MIN. AWAY FROM ALL EXHAUST OUTLETS, PLUMBING VENTS, AND FLUES.
5. CONTRACTOR SHALL COORDINATE EXACT EQUIPMENT PAD SIZES AND LOCATIONS WITH OTHER TRADES PRIOR TO INSTALLATION.
6. MAINTAIN MANUFACTURER MIN. CLEARANCES ON ALL AC UNITS.
7. BEFORE BIDDING ON THIS WORK, THE CONTRACTOR SHALL MAKE A CAREFUL EXAMINATION OF THE PREMISES, EXISTING EQUIPMENT AND SERVICES. HE SHALL DEFINITELY DETERMINE IN ADVANCE, THE METHODS OF INSTALLING AND CONNECTING THE NEW EQUIPMENT, DUCTWORK, AND PIPING THE MEANS TO BE PROVIDED FOR GETTING THE EQUIPMENT AND MATERIALS INTO PLACE AND SHALL MAKE HIMSELF THOROUGHLY FAMILIAR WITH ALL OF THE REQUIREMENTS OF THE PROJECT. FAILURE TO VISIT THE SITE WILL IN NO WAY RELIEVE THE SUCCESSFUL CONTRACTOR OF THE NECESSITY OF FURNISHING ANY MATERIAL OR PERFORMING ANY WORK THAT MAY BE REQUIRED TO COMPLETE THE WORK IN ACCORDANCE WITH THE DRAWINGS AND SPECIFICATIONS. THIS ADDITIONAL WORK SHALL BE PERFORMED WITHOUT ADDITIONAL COST TO THE OWNER.
8. BEFORE COMMENCEMENT OF WORK, THE CONTRACTOR SHALL VERIFY THE EXACT LOCATIONS AND DIMENSIONS OF ALL EXISTING EQUIPMENT AND ELECTRICAL SERVICES IN THE AREA OF CONSTRUCTION AND NOTIFY THE ENGINEER OF ANY DISCREPANCIES.
9. ALL NEW EXPOSED SHEET METAL DUCTWORK, SHEET METAL CURB / PLATFORM AND DUCT SUPPORT SHALL BE PREPARED AND PAINTED PER DISTRICT STANDARDS.

NORTH

BUILDING K - REMODEL FLOOR PLAN | 1/8" = 1'-0" | 1

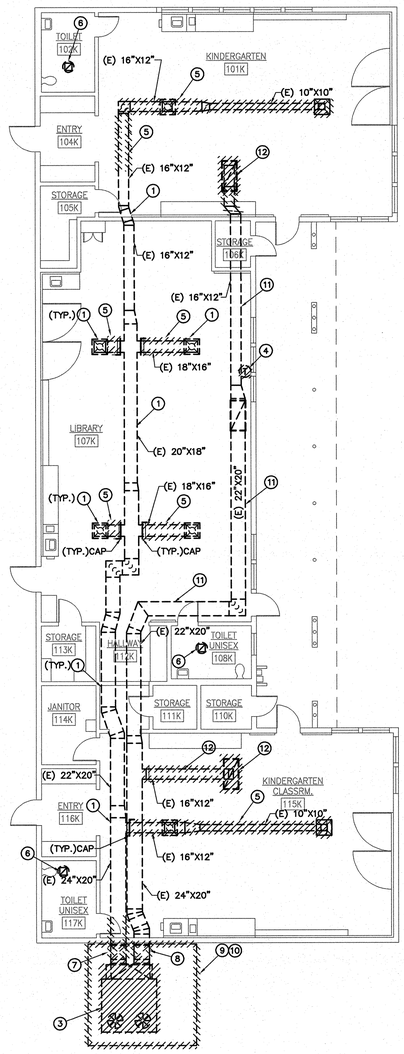

DEMOLITION KEY NOTES:

1. EXISTING MAIN SUPPLY DUCTWORK AND SUPPLY AIR DIFFUSERS TO REMAIN.
2.
3. EXISTING AC UNIT, AC UNIT CURB AND RELATED ACCESSORIES TO BE REMOVED AND REPLACED WITH NEW AC UNIT.
4. EXISTING T-STAT TO BE REMOVED.
5. PARTIAL EXISTING SUPPLY AIR DUCT AND EXISTING MANUAL VOLUME DAMPER TO BE REMOVED. CAP UNUSED DUCT OPENING.
6. EXISTING EXHAUST FAN AND DUCTWORK TO REMAIN.
7. EXISTING 24"X20" MAIN SUPPLY AIR DUCT TO BE REMOVED AND REPLACED.
8. EXISTING 24"X20" RETURN DUCT TO BE REMOVED AND REPLACED.
9. EXISTING CONCRETE PAD TO BE REMOVED AND REPLACED WITH A NEW PAD.
10. EXISTING FENCE TO BE REMOVED AND REPLACED WITH A NEW FENCE AT A NEW LOCATION.
11. EXISTING MAIN RETURN DUCT AND AIR GRILLES TO REMAIN.
12. EXISTING RETURN DUCT AND AIR GRILLES TO BE REMOVED.

GENERAL DEMOLITION NOTES

1. OWNER SHALL HAVE FIRST RIGHT OF REFUSAL ON ALL ITEMS TO BE REMOVED.CONTRACTOR SHALL VERIFY ALL SUCH ITEMS WITH OWNER PRIOR TO REMOVAL. ALL ITEMS NOT REFUSED BY OWNER SHALL BE REMOVED INTACT AND FULLY FUNCTIONAL BY REFUSED BY OWNER SHALL BE PROPERLY DISPOSED OF BY CONTRACTOR.
2. CONTRACTOR SHALL RE-USE EXISTING OPENINGS IN WALLS AND ROOF WHEREVER POSSIBLE. COORDINATE WITH OTHER TRADES AS NECESSARY. GENERAL CONTRACTOR SHALL MODIFY OPENING AS REQUIRED TO ACCOMMODATE NEW MECHANICAL DEVICE.
3. GENERAL CONTRACTOR SHALL PATCH ALL OPENINGS IN WALLS, ROOF, ETC. THAT WILL NOT BE REUSED FOR FUTURE WORK. COORDINATE AS NECESSARY WITH OTHER TRADES.
4. CONTRACTOR SHALL COORDINATE WITH OWNER PRIOR TO ANY WORK BEING DONE STORAGE OF MECHANICAL EQUIPMENT TO BE RE-USED DURING CONSTRUCTION.
5. PRIOR TO ANY WORK BEING DONE CONTRACTOR SHALL MAKE A CAREFUL EVALUATION OF THE EXISTING CONDITIONS AND VERIFY ALL METHODS OF REMOVAL AND INSTALLATION OF MECHANICAL EQUIPMENT.
6. CONTRACTOR SHALL COORDINATE ALL DEMOLITION WORK WITH THE WORK OF ALL OTHER TRADES.
7. CONTRACTOR SHALL CLEAN ALL AIR DEVICES AND DUCTWORK TO REMAIN PER SPECIFICATIONS.
8. CONTRACTOR SHALL CLEAN ALL EXISTING DUCTWORK INCLUDING LINED DUCTWORK TO REMAIN PER SPECIFICATIONS. PRIOR TO BID AND BEFORE COMMENCEMENT OF ANY WORK ALL EXISTING DUCTWORK TO REMAIN SHALL BE CONFIRMED ON SITE.

NORTH

BUILDING K - DEMOLITION FLOOR PLAN | 1/8" = 1'-0" | 2

ARCHITECTS
WLC
CLIENT FOCUSED • PASSION DRIVEN

SOUTHERN CALIFORNIA
8163 ROCHESTER AVENUE, SUITE 100
RANCHO CUCAMONGA
CALIFORNIA 91730-0729

TEL: 909-987-0909
www.wlcarchitects.com

LONGFELLOW ELEMENTARY SCHOOL HVAC REPLACEMENT

COMPTON UNIFIED SCHOOL DISTRICT
1101 S DWIGHT AVE.
COMPTON, CA 90220

LICENSED ARCHITECT — KEVIN GRAHAM — C-26046 — 03-31-19 — STATE OF CALIFORNIA

REGISTERED PROFESSIONAL ENGINEER — ROBERT BANKERD — No. M29253 — Exp. 6/30/19 — MECHANICAL — STATE OF CALIFORNIA

CONSULTANT

R.E. 19-23

IDENTIFICATION STAMP
DIV. OF THE STATE ARCHITECT
OFFICE OF REGULATION SERVICES
APPL 03-118423
AC — FLS — SS
DATE MAR 0 6 2018

NO	DATE	BY	DESCRIPTION
			REVISIONS

DRAWN: KC	CHECKED:
DATE: 3/6/2018	SCALE:
PROJECT NUMBER: 570064	

BUILDING K DEMO AND REMODEL FLOOR PLANS

DRAWING NUMBER: M-2.6

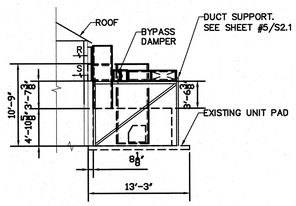

SECTION A-A

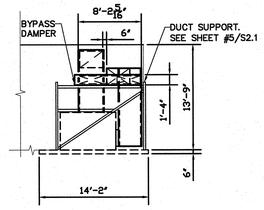

SECTION B-B

MECHANICAL SECTION BUILDING E

SCALE NONE 6

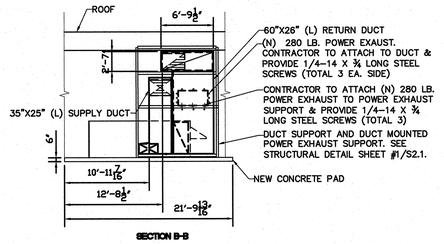

SECTION B-B

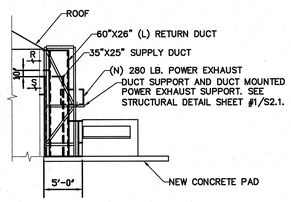

SECTION A-A

MECHANICAL SECTION BUILDING F

SCALE NONE 3

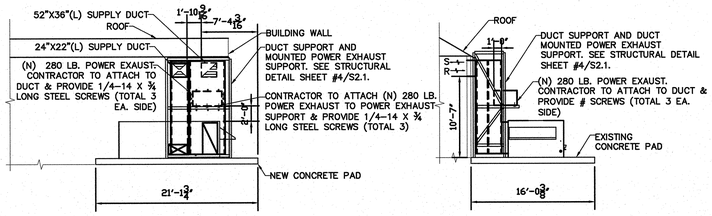

SECTION B-B

SECTION A-A

MECHANICAL SECTION BUILDING K

SCALE NONE 5

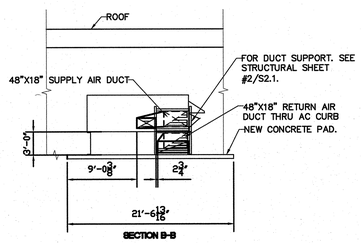

SECTION B-B

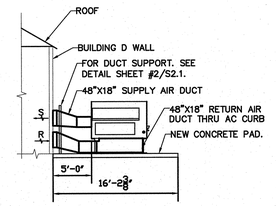

SECTION A-A

MECHANICAL SECTION BUILDING D

SCALE NONE 2

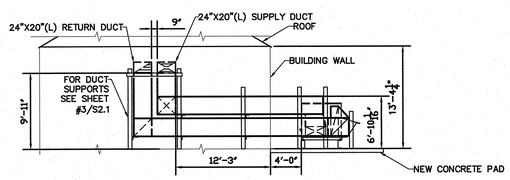

SECTION A-A

MECHANICAL SECTION BUILDING G

SCALE NONE 4

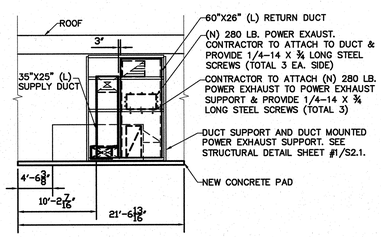

SECTION B-B

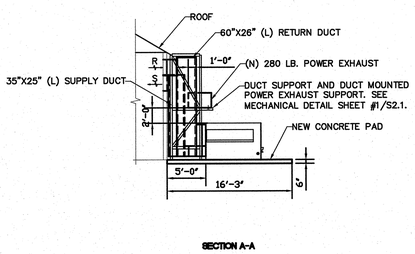

SECTION A-A

MECHANICAL SECTION BUILDING C

SCALE NONE 1

ARCHITECTS
WLC
CLIENT FOCUSED • PASSION DRIVEN

SOUTHERN CALIFORNIA
8163 ROCHESTER AVENUE, SUITE 100
RANCHO CUCAMONGA
CALIFORNIA 91730-0729

TEL: 909-987-0909

www.wlcarchitects.com

LONGFELLOW ELEMENTARY SCHOOL HVAC REPLACEMENT

COMPTON UNIFIED SCHOOL DISTRICT
1101 S DWIGHT AVE.
COMPTON, CA 90220

LICENSED ARCHITECT — MARK GRAHAM C-26046 03-31-19 — STATE OF CALIFORNIA

REGISTERED PROFESSIONAL ENGINEER — ROBERT BANEKOV No. M29253, Exp. 6/30/19 — MECHANICAL — STATE OF CALIFORNIA

CONSULTANT

IDENTIFICATION STAMP
DIV. OF THE STATE ARCHITECT
OFFICE OF REGULATION SERVICES
APPL 03-118423
AC — FLS SS KEY
DATE MAR 0 9 2018
FILE: 19-23

NO	DATE	BY	DESCRIPTION
			REVISIONS

DRAWN: KC	CHECKED:
DATE: 3/6/2018	SCALE:
PROJECT NUMBER: 570064	

MECHANICAL SECTIONS

DRAWING NUMBER: M-3.1

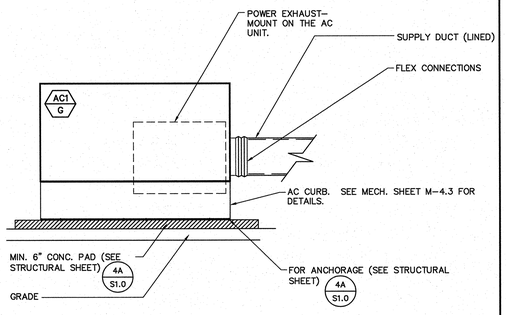

AC UNIT WITH CURB MOUNTING DETAIL

SCALE NONE | 13

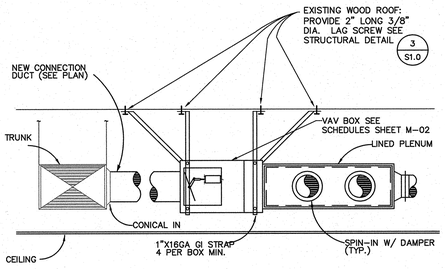

VAV BOX DETAIL

SCALE NONE | 11

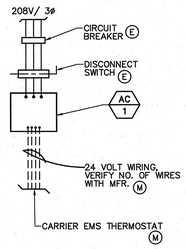

A/C CONTROL

SCALE NONE | 7

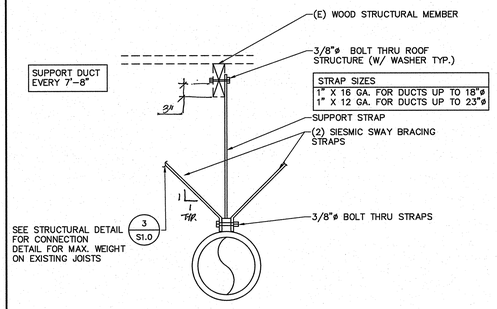

DUCT SUPPORT DETAIL – WOOD

SCALE NONE | 4

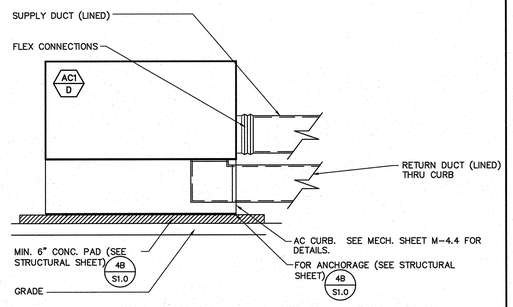

AC UNIT WITHOUT CURB MOUNTING DETAIL

SCALE NONE | 10

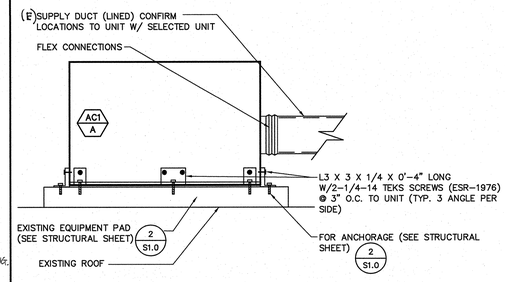

AC UNIT WITHOUT CURB MOUNTING DETAIL

SCALE NONE | 6

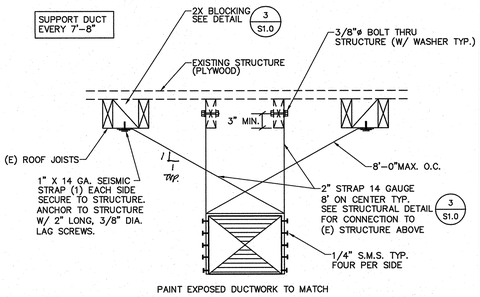

EXPOSED DUCT SUPPORT DETAIL – WOOD

SCALE NONE | 3

AC UNIT WITH DUCT THRU CURB MOUNTING DETAIL

SCALE NONE | 9

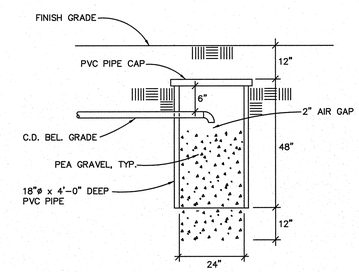

DRYWELL DETAIL

SCALE NONE | 5

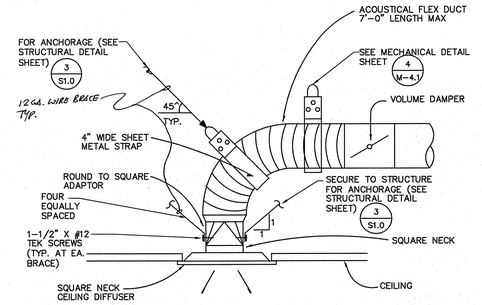

CEILING DIFFUSER DETAIL

SCALE NONE | 2

NOT USED

SCALE NONE | 12

NOT USED

SCALE NONE | 8

NOT USED

SCALE NONE

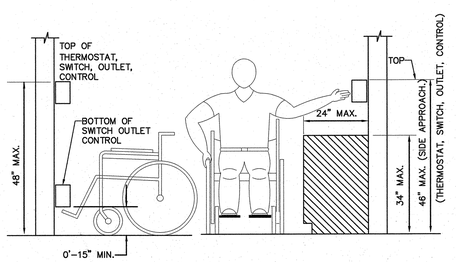

ADA CONTROL, DEVICE MOUNTING HEIGHT DETAIL

SCALE NONE | 1

ARCHITECTS
WLC
CLIENT FOCUSED • PASSION DRIVEN
SOUTHERN CALIFORNIA
8163 ROCHESTER AVENUE, SUITE 100
RANCHO CUCAMONGA
CALIFORNIA 91730-0729
TEL: 909-987-0909
www.wlcarchitects.com

LONGFELLOW ELEMENTARY SCHOOL HVAC REPLACEMENT

COMPTON UNIFIED SCHOOL DISTRICT
1101 S DWIGHT AVE.
COMPTON, CA 90220

LICENSED ARCHITECT MARK GRAHAM C-26046 03-31-19 STATE OF CALIFORNIA

REGISTERED PROFESSIONAL ENGINEER MARK BANERJEE No. M29253 Exp. 6/30/19 MECHANICAL STATE OF CALIFORNIA

CONSULTANT

IDENTIFICATION STAMP
DIV. OF THE STATE ARCHITECT
OFFICE OF REGULATION SERVICES
APPL 03-118423
AC FLS SS
DATE MAY 0 6 2019
FILE: 19-23

NO	DATE	BY	DESCRIPTION
1			REVISIONS

DRAWN: KC | CHECKED:
DATE: 3/6/2018 | SCALE:
PROJECT NUMBER: 570064

MECHANICAL DETAILS

DRAWING NUMBER: M-4.1

DETAIL-3

MAKE	MAKE	TYPE	SIZE	CURB WT
AC-1/G	CARRIER	48LCB	12A	220#

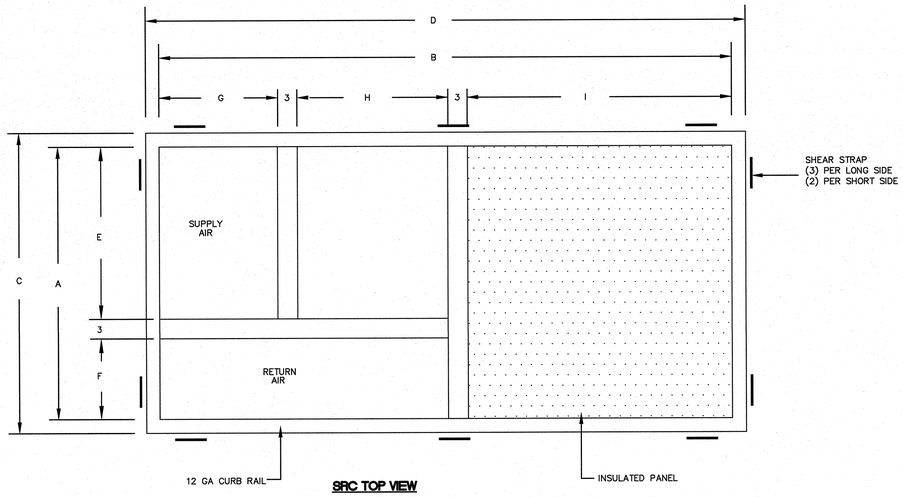

SRC TOP VIEW

A	B	C	D	E	F	G	H	I			
54-1/4	105-3/4	57-3/4	109-1/4	35-7/16	15-13/16	29-7/16	20-15/16	52-7/8			
						J	K	L	M	N	O
						60-1/16	111-3/4	3	3	109-3/4	58-1/16

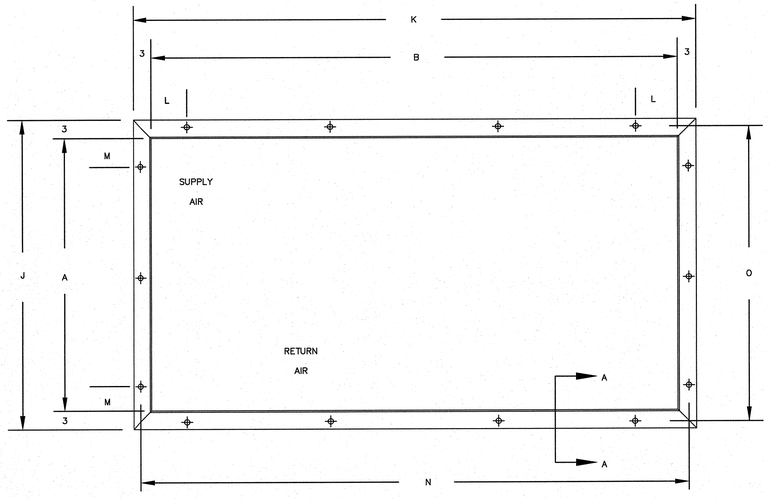

SRC FOOTPRINT

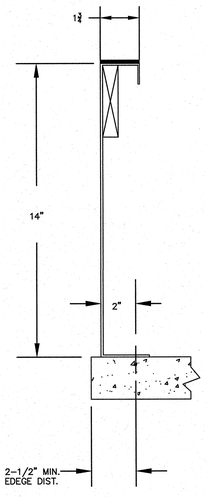

SECTION A-A

NOTES:

1. N & O DIMENSIONS ARE CENTERLINES OF ANCHOR HOLES IN CURB BOTTOM FLANGE.
2. DUCT SUPPORTS NOT SHOWN FOR CLARITY.
3. FOR ANCHORAGE, SEE STRUCTURAL DETAIL SHEET #4/S1.0.

TOP AND BOTTOM CURB DETAILS — SCALE NONE — 3

DETAIL-2

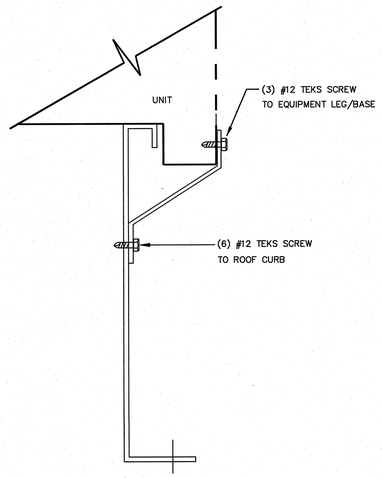

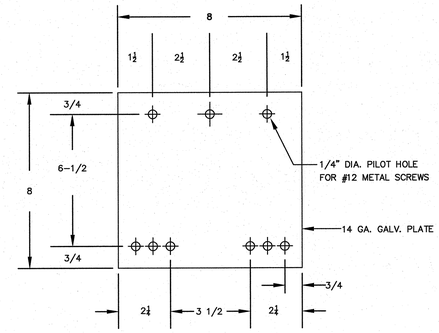

SEISMIC STRAP

ISOLATOR AND SEISMIC STRAP DETAIL — SCALE NONE — 2

DETAIL-1

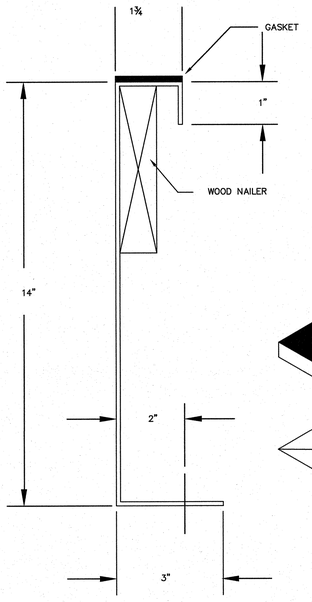

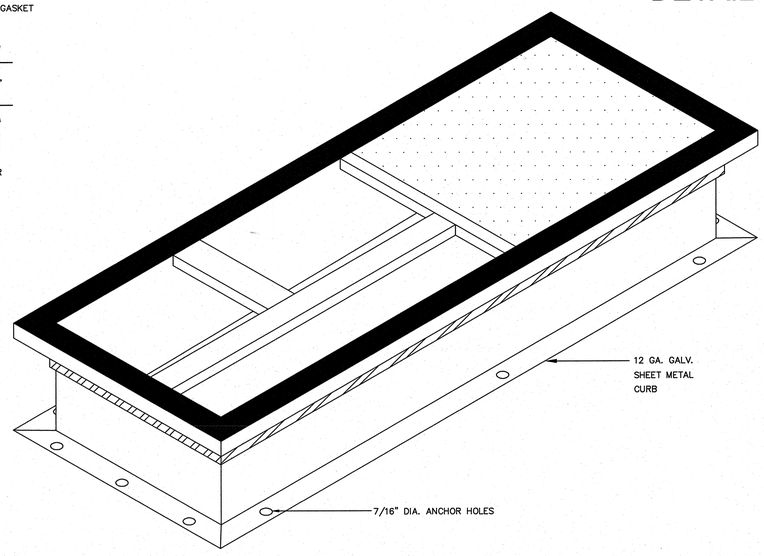

NOTES:

1. FOR ANCHOR REQUIREMENTS AND DETAILS OF ISOLATORS AND SEISMIC STRAPS, SEE DETAIL 2, 3.
2. SUBMITTED ROOF CURBS ARE LEVEL. PITCHED ROOF CURBS ARE AVAILABLE UPON REQUEST TO MATCH ROOF SLOPE.
3. NOT FOR CONSTRUCTION, ALL DIMENSIONS REQUIRE FINAL REVIEW AT COMMENCEMENT OF PROJECT

AC1/G UNITS ISO CURB MOUNTING EQUIPMENT PLATFORM DETAIL — SCALE NONE — 1

WLC ARCHITECTS
CLIENT FOCUSED • PASSION DRIVEN
SOUTHERN CALIFORNIA
8163 ROCHESTER AVENUE, SUITE 100
RANCHO CUCAMONGA
CALIFORNIA 91730-0729
TEL: 909-987-0909
www.wlcarchitects.com

LONGFELLOW ELEMENTARY SCHOOL HVAC REPLACEMENT

COMPTON UNIFIED SCHOOL DISTRICT
1101 S DWIGHT AVE.
COMPTON, CA 90220

LICENSED ARCHITECT — MARK GRAHAM — C-26046 — 03-31-19 — STATE OF CALIFORNIA

REGISTERED PROFESSIONAL ENGINEER — ABBY BANERJEE — No. M29253 — Exp. 6/30/19 — MECHANICAL — STATE OF CALIFORNIA

CONSULTANT

FILE: 19-23
IDENTIFICATION STAMP
DIV. OF THE STATE ARCHITECT
OFFICE OF REGULATION SERVICES
APPL 03-118423
AC — FLS — SS
DATE

NO	DATE	BY	DESCRIPTION

REVISIONS

DRAWN: KC	CHECKED:
DATE: 3/6/2018	SCALE:
PROJECT NUMBER: 570064	

MECHANICAL DETAILS

DRAWING NUMBER: M-4.3

DETAIL-3

MARK	MAKE	TYPE	SIZE	CURB WT.
AC-1/D	CARRIER	48LCD	24	850 #

NOTES:

1) INDICATES SEISMIC TIE-DOWN PLATE.
(3) PER LONG SIDE, (3) PER SHORT SIDE, SEE DETAIL 2.

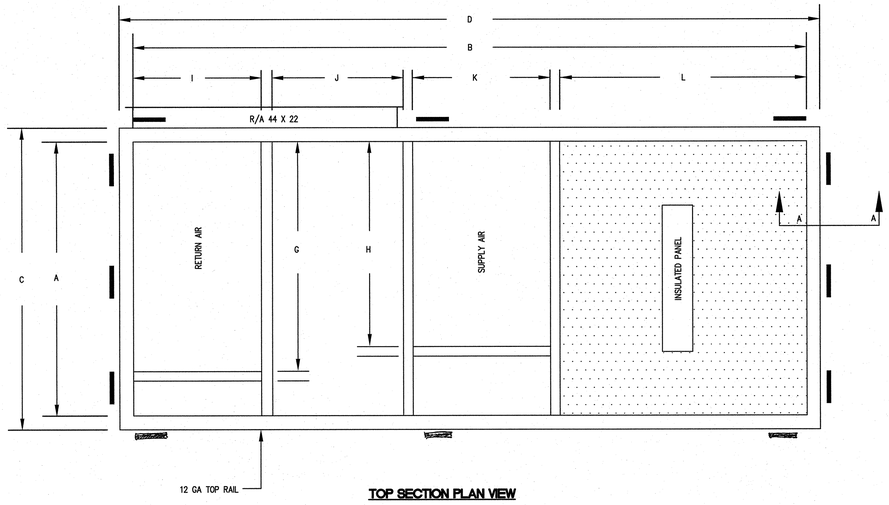

TOP SECTION PLAN VIEW

A	B	C	D	E	F	G	H	I	J	K	L	M
76-7/8	148-3/16	80-3/8	151-11/16	---	----	69-9/16	63-7/8	22-3/16	21-7/8	22-7/8	71-3/16	--
						N	O	P	Q	R	S	T
						82-7/8	154-3/16	3	3	---	152-3/16	80-7/8

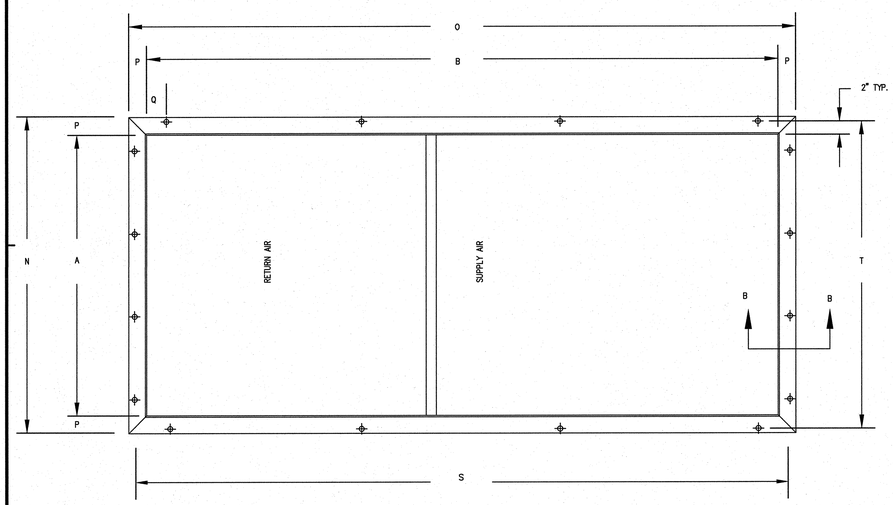

BOTTOM SECTION FOOTPRINT

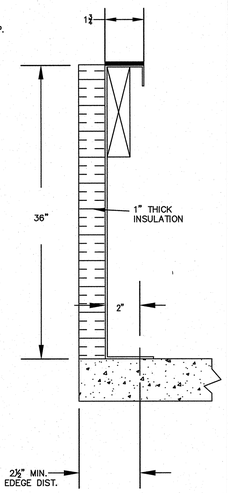

SECTION A-A

NOTES:

1. S & T DIMENSIONS ARE CENTERLINES OF ANCHOR HOLES IN CURB BOTTOM FLANGE.
2. DUCT SUPPORTS NOT SHOWN FOR CLARITY.
3. FOR ANCHORAGE, SEE STRUCTURAL DETAIL SHEET #4/S1.0.

TOP AND BOTTOM CURB DETAILS SCALE NONE 3

DETAIL-2

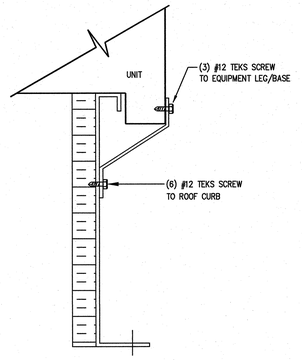

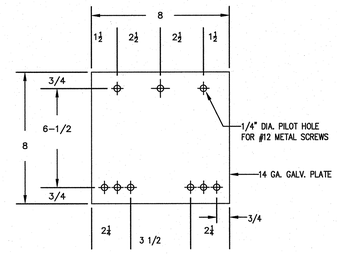

SEISMIC STRAP

AC CURB. SEE SHEET M4.2 FOR DETAILS.

ISOLATOR AND SEISMIC STRAP DETAIL SCALE NONE 2

DETAIL-1

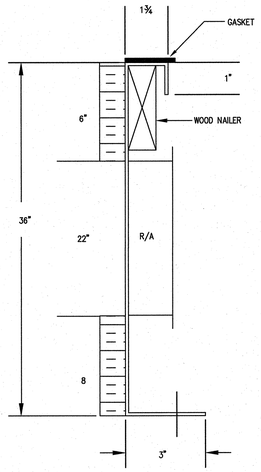

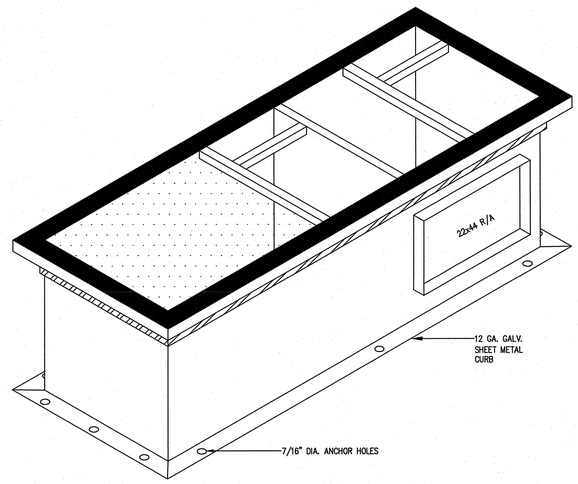

NOTES:

1. FOR ANCHOR REQUIREMENTS AND DETAILS OF ISOLATORS AND SEISMIC STRAPS, SEE DETAIL 2, 3.
2. SUBMITTED ROOF CURBS ARE LEVEL. PITCHED ROOF CURBS ARE AVAILABLE UPON REQUEST TO MATCH ROOF SLOPE.
3. NOT FOR CONSTRUCTION, ALL DIMENSIONS REQUIRE FINAL REVIEW AT COMMENCEMENT OF PROJECT

AC1/D UNITS ISO CURB MOUNTING EQUIPMENT PLATFORM DETAIL SCALE NONE 1

WLC ARCHITECTS
CLIENT FOCUSED • PASSION DRIVEN

SOUTHERN CALIFORNIA
8163 ROCHESTER AVENUE, SUITE 100
RANCHO CUCAMONGA
CALIFORNIA 91730-0729
TEL: 909-987-0909
www.wlcarchitects.com

LONGFELLOW ELEMENTARY SCHOOL HVAC REPLACEMENT

COMPTON UNIFIED SCHOOL DISTRICT
1101 S DWIGHT AVE.
COMPTON, CA 90220

LICENSED ARCHITECT MARK GRAHAM C-26046 03-31-19 STATE OF CALIFORNIA

REGISTERED PROFESSIONAL ENGINEER ABBY BANERJEE No. M29253 Exp. 6/30/19 MECHANICAL STATE OF CALIFORNIA

CONSULTANT

FILE: 19-23
IDENTIFICATION STAMP DIV. OF THE STATE ARCHITECT OFFICE OF REGULATION SERVICES
APPL 03-118423
AC FLS SS EY
DATE MAR 0 9 2018

NO	DATE	BY	DESCRIPTION

REVISIONS

DRAWN: KC	CHECKED:
DATE: 3/6/2018	SCALE:
PROJECT NUMBER: 570064	

MECHANICAL DETAILS

DRAWING NUMBER: M-4.4

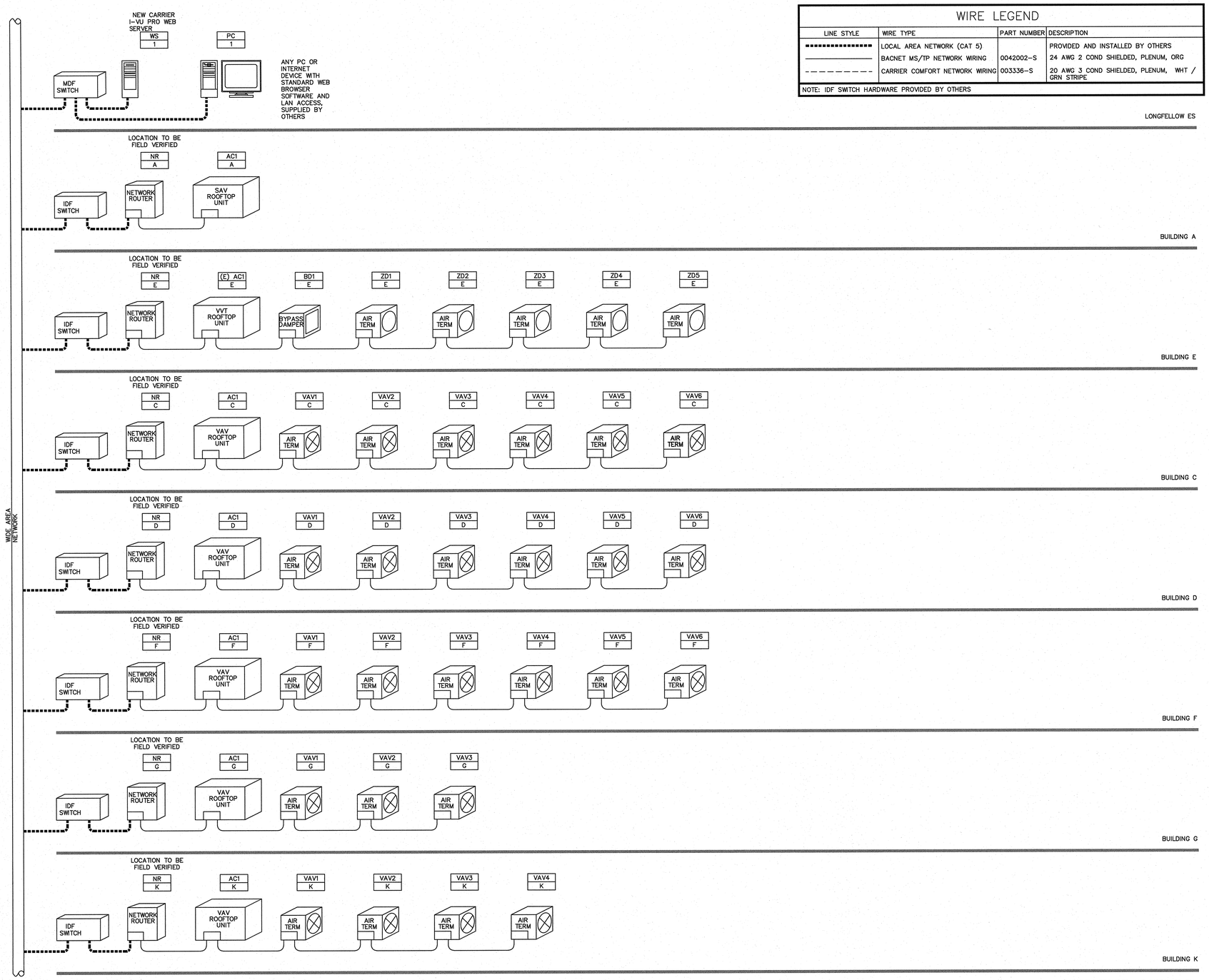

CONTROLS PROVIDED AND INSTALLED BY RUSSELL SIGLER INC CONTROLS GROUP

WIRE LEGEND

LINE STYLE	WIRE TYPE	PART NUMBER	DESCRIPTION
▪▪▪▪▪▪▪▪▪▪	LOCAL AREA NETWORK (CAT 5)		PROVIDED AND INSTALLED BY OTHERS
———	BACNET MS/TP NETWORK WIRING	0042002-S	24 AWG 2 COND SHIELDED, PLENUM, ORG
– – – – – –	CARRIER COMFORT NETWORK WIRING	003336-S	20 AWG 3 COND SHIELDED, PLENUM, WHT / GRN STRIPE

NOTE: IDF SWITCH HARDWARE PROVIDED BY OTHERS

GENERAL NOTES:

1. WHERE SCHEMATIC CONTROL IS NOT SHOWN THE CONTRACTOR SHALL COORDINATE WITH THE UNIT MANUFACTURER AND PROVIDE REQUIRED CONTROL/WIRING DIAGRAM AND PROPOSED SEQUENCE OF OPERATION.
2. PROVIDE ADDITIONAL MAIN DCP GLOBAL CONTROL PANELS TO ASSURE PROPER OPERATION, CAPACITY REQUIREMENTS AND COMMUNICATION SPEED. LOCATE IN ELECTRIC OR TR ROOMS ON ADDITIONAL FLOORS TO ACHIEVE THE MOST EFFECTIVE INSTALLATION.
3. SEE MECHANICAL SCHEDULES AND SHEETS FOR FINAL UNIT COUNTS.
4. ALL LOW VOLTAGE CONDUIT AND WIRING FOR THE EMS/CONTROLS IS THE RESPONSIBILITY OF THE EMS CONTRACTOR.
5. ALL WIRING TO BE INSTALLED IN CONDUIT IN NON-CONCEALED AND/OR NON-ACCESSABLE AREAS.
6. ALL HIGH VOLTAGE INTERLOCK WIRING FOR THE CONTROL AND EMS SYSTEMS IS THE RESPONSIBILITY OF THE EMS CONTRACTOR UNLESS SPECIFICALLY STATED OTHERWISE.
7. ALL HIGH VOLTAGE POWER WIRING IS THE RESPONSIBILITY OF THE DIV. 26 ELECTRICAL CONTRACTOR UNLESS SPECIFICALLY STATED OTHERWISE.
8. FOR GENERAL NOTES SEE DRAWING M-01.
9. PROVIDE GRAPHIC PROGRAMMING LANGUAGE VIEWED AND MAINTAINED FROM OPERATOR WORK STATION AND INTERACTIVE GRAPHICS FOR USER INTERFACE.
10. PROVIDE GRAPHIC PROGRAMMING LANGUAGE (HARDWARE AND SOFTWARE) AS REQUIRED TO INTERACT WITH EXISTING CAMPUS BUILDING MANAGEMENT SYSTEM.
11. THIS INFORMATION IS DIAGRAMMATIC ONLY (CORRECT COUNTS FOR ALL CONTROL DEVICES BY CONTROLS CONTRACTOR).
12. PROVIDE NECESSARY INTERFACE TO CONNECT TO OTHER MANUFACTURER OPEN PROTOCOL MICROPROCESSOR BASED EQUIPMENT. COORDINATE WITH UNIT MANUFACTURERS TO MAKE THIS CONNECTION POSSIBLE.
13. ALL DIGITAL INPUTS (DI) AND OUTPUTS (DO) SHALL HAVE RUNTIME ACCUMULATOR FOR MAINTENANCE MONITORING.
14. CONTROLS SYSTEM SHALL BE INTEGRATED WITH BUILDING NETWORK TO ALLOW USE OF THE CONTROL SYSTEM AT ANY WORKSTATION. MULTI-LEVEL PASSWORDS SHALL BE INCORPORATED.
15. BIDDERS SHALL CREATE THEIR OWN ARCHITECTURE TO PROVIDE FOR A FULLY FUNCTIONING OPEN PROTOCOL THAT IS COMPATIBLE WITH ANY BUILDING MANAGEMENT SYSTEM.
16. PROVIDE TIME DELAY PROGRAM FOR SEQUENCED RESTARTING OF ALL EQUIPMENT.
17. PROVIDE QUANTITY AND DETERMINE LOCATION OF ALL 120V POWER CONNECTIONS REQUIRED FOR ALL PANELS,TRANSFORMERS, CONTROLLERS, ETC. TO ACCOMPLISH INSTALLATION AND A FULLY FUNCTIONING SYSTEM.
18. ALL LOW VOLTAGE CONTROLS WIRING INCLUDING LINE VOLTAGE (120 VOLT) WIRING TO PROVIDE POWER TO BUILDING AUTOMATION SYSTEM (BAS) PANELS SHALL BE FURNISHED AND INSTALLED BY CONTROLS CONTRACTOR. COORDINATE WITH ELECTRICAL CONTRACTOR TO DETERMINE SOURCES FOR 120 VOLT.
19. ALL PIPING NECESSARY FOR CONTROLS SCOPE OF WORK SHALL BE FURNISHED AND INSTALLED BY CONTROLS CONTRACTOR.
20. DDC SYSTEM POINTS AND OPERATING SEQUENCES REFLECTED ON THIS DOCUMENT SHALL PROVIDE BASIS OF DESIGN FOR CONTROLS SYSTEMS.
21. CONTROLS CONTRACTOR SHALL BE FULLY RESPONSIBLE TO DESIGN, FURNISH, AND INSTALL CENTRALIZED DDC CONTROLS SYSTEM TO DELIVER FULLY FUNCTIONAL CONTROLS SYSTEM. ALL NECESSARY HARDWARE AND SOFTWARE SHALL BE INCLUDED.
22. CONTROLS CONTRACTOR SHALL REVIEW ELECTRICAL DRAWINGS TO INCLUDE ADDITIONAL CONTROLS SCOPE AS REQUIRED.
23. ALL INPUTS AND OUTPUTS SHALL BE TRENDED.
24. CONTROLS CONTRACTOR SHALL PROVIDE REQUIRED ASSISTANCE TO COMMISSION VARIOUS MECHANICAL, PLUMBING AND ELECTRICAL SYSTEM.
25. ALL CONTROL POINTS ARE REQUIRED TO BE READABLE, GRAPHICALLY VIEWABLE AND TRENDABLE BY FACILITY PERSONNEL.
26. THE BMS/BAS/EMS SYSTEM SHALL INITIATE ALARMS AND NOTIFY TENANT VIA TEXT MESSAGE AND E-MAIL.
27. SURVEY ALL THE CONSTRUCTION FLOORS AND PROVIDE NEW GRAPHIC/PROGRAMMING (HARDWARE AND SOFTWARE) FOR MECHANICAL, PLUMBING AND ELECTRICAL SYSTEM.
28. ALL CONTROL DEVICES SHALL BE FIELD CALIBRATE FOR CLOSE TEMPERATURE CONTROLS.
29. FURNISH, INSTALL, AND WIRE NEW BACNET CONTROLLERS.
30. 110V POWER FOR ALL CONTROL DEVICES & PANELS BY ELECTRICAL CONTRACTOR. DIIV 18.
31. EXACT BACNET MS/TP NETWORK LAYOUT TO BE DETERMINED BY CONTROLS CONTRACTOR.
32. ALL LOW VOLTAGE HVAC CONTROLS WIRING IN NON-CONCEALED AND/OR NON-ACCESSABLE AREAS SHALL BE IN EMT CONDUIT.
33. CREATE EQUIPMENT GRAPHICS FOR ALL EQUIPMENT AND FLOOR PLAN GRAPHICS.

CONTROL LEGEND	
ABBR.	DESCRIPTION
A	ACTUATOR
AC	AIR CONDITIONER
ACCU	AIR COOLED CONDENSING UNIT
AI	ANALOG INPUT
AO	ANALOG OUTPUT
BI	BINARY INPUT
BO	BINARY OUTPUT
BMS	BUILDING MANAGEMENT SYSTEM
BACNET	BUILDING AUTOMATION AND CONTROL NETWORK
BD	BYPASS DAMPER
BP	BUILDING PRESSURE
CCN	CARRIER COMFORT NETWORK
CU	CONDENSING UNIT
CV	CONSTANT VOLUME
CO2	CARBON DIOXIDE
CSR	CURRENT SENSING RELAY
DPT	DIFFERENTIAL PRESSURE TRANSDUCER
D/X	DIRECT EXPANSION
E	EXISTING
EA	EXHAUST AIR
EAC	EXISTING AIR CONDITIONER
EF	EXHAUST FAN
FB	FEEDBACK
FLTR	FILTER
FCU	FAN COIL UNIT
HP	HEAT PUMP
HV	HEATING VENTILATION
H/X	HEAT EXCHANGER
IDF	NTERMEDIATE DISTRIBUTION FRAME
M	MANUAL
MDF	MAIN DISTRIBUTION FRAME
MS/TP	MASTER SLAVE / TOKEN PASS
NL	NETWORK LINK
NR	NETWORK ROUTER
N	NEW
OA	OUTSIDE AIR
OAT	OUTSIDE AIR TEMPERATURE
OAD	OUTSIDE AIR DAMPER
RA	RETURN AIR
RAT	RETURN AIR TEMPERATURE
RAD	RETURN AIR DAMPER
RH	RELATIVE HUMIDITY
RTU	ROOF TOP UNIT
SAC	SPLIT AIR CONDITIONER
SA	SUPPLY AIR
SD	SMOKE DETECTOR
SP	SUPPLY DUCT PRESSURE
SF	SUPPLY FAN
SAV	STAGED AIR VOLUME
SAT	SUPPLY AIR TEMPERATURE
SPD	SPEED
STAT	STATUS
S/S	START / STOP
TEMP	TEMPERATURE
TS	TEMPERATURE SENSOR
WMPU	WALL MOUNTED PACKAGE UNIT
WS	WEB SERVER
VVT	VARIABLE VOLUME, TEMPERATURE
VAV	VARIABLE AIR VOLUME
VFD	VARIABLE FREQUENCY DRIVE
ZD	ZONE DAMPER

ICON	DESCRIPTION	ICON	DESCRIPTION
	– FAN		– ENTHALPY SENSOR
	– HEATING COIL – COOLING COIL – HEAT EXCHANGER		– SPACE SENSOR
	– BAROMETRIC DAMPER – AIR HOOD		– PRESSURE SENSOR
	TEMPERATURE SENSOR		– DIFFERENTIAL PRESSURE SENSOR
	– FILTER		– CURRENT SENSOR
	– ECONOMIZER		– ACTUATED DAMPER

EMCS RISER DIAGRAM

SCALE NONE

1

ARCHITECTS
WLC
CLIENT FOCUSED • PASSION DRIVEN

SOUTHERN CALIFORNIA
8163 ROCHESTER AVENUE, SUITE 100
RANCHO CUCAMONGA
CALIFORNIA 91730-0729

TEL: 909-987-0909

www.wlcarchitects.com

LONGFELLOW ELEMENTARY SCHOOL HVAC REPLACEMENT

COMPTON UNIFIED SCHOOL DISTRICT
1101 S DWIGHT AVE.
COMPTON, CA 90220

LICENSED ARCHITECT
MARK GRAHAM
C-26046
03-31-19
STATE OF CALIFORNIA

REGISTERED PROFESSIONAL ENGINEER
BRIAN BANKHEAD
No. M29253
Exp. 6/30/19
MECHANICAL
STATE OF CALIFORNIA

CONSULTANT

IDENTIFICATION STAMP
DIV. OF THE STATE ARCHITECT
OFFICE OF REGULATION SERVICES
APPL 03-118423
AC FLS SS KEY
DATE MAR 04 2019
FILE: 19-23

NO	DATE	BY	DESCRIPTION
1			REVISIONS

DRAWN: KC
CHECKED:
DATE: 3/6/2018
SCALE:
PROJECT NUMBER: 570064

WIRING DIAGRAM DETAILS

DRAWING NUMBER: M-5.1

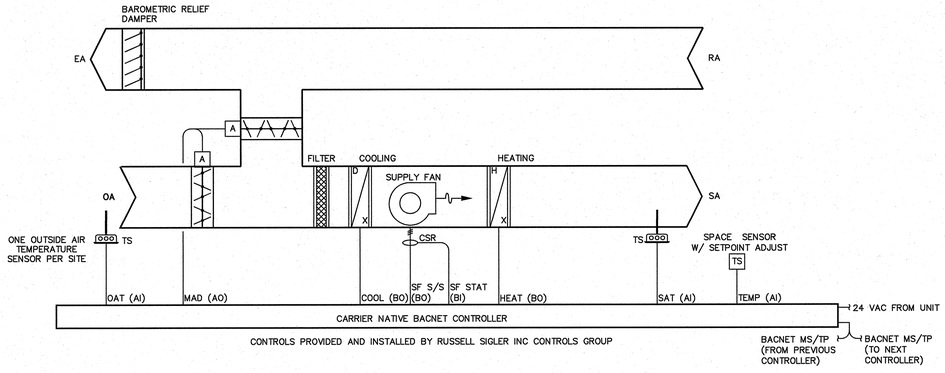

SEQUENCE OF OPERATION

INDOOR FAN
DURING OCCUPIED PERIODS, FAN SHALL OPERATE CONTINUOUSLY. DURING UNOCCUPIED PERIODS, FAN SHALL OPERATE WHEN THE SPACE TEMPERATURE EXCEEDS THE UNOCCUPIED HEATING OR COOLING SETPOINTS.

SINGLE SPEED
THE FAN OPERATES AT ONE SPEED ONLY AND PROVIDES ON/OFF OPERATION.

HEATING MODE
THE CONTROLLER WILL MEASURE THE ZONE TEMPERATURE AND STAGE THE HEATING TO MAINTAIN ITS HEATING SETPOINT. TO PREVENT SHORT CYCLING, THE STAGE WILL HAVE A USER DEFINABLE (ADJ.) MINIMUM RUNTIME. THE HEATING WILL BE ENABLED WHENEVER: OUTSIDE AIR TEMPERATURE IS LESS THAN 65°F (ADJ.), THE ZONE TEMPERATURE IS BELOW HEATING SETPOINT, THE SUPPLY FAN STATUS IS ON, AND THE COOLING IS NOT ACTIVE.

COOLING MODE
THE CONTROLLER WILL MEASURE THE ZONE TEMPERATURE AND STAGE THE COOLING TO MAINTAIN ITS COOLING SETPOINT. TO PREVENT SHORT CYCLING, THE STAGE WILL HAVE A USER DEFINABLE (ADJ.) MINIMUM RUNTIME. THE COOLING WILL BE ENABLED WHENEVER: OUTSIDE AIR TEMPERATURE IS GREATER THAN 60°F (ADJ.), THE ECONOMIZER IS DISABLED OR FULLY OPEN, THE ZONE TEMPERATURE IS ABOVE COOLING SETPOINT, THE SUPPLY FAN STATUS IS ON, AND THE HEATING IS NOT ACTIVE.

ECONOMIZER
THE FOLLOWING CONDITIONS MUST BE TRUE FOR ECONOMIZER OPERATION:
- THE OUTDOOR AIR TEMPERATURE IS LESS THAN THE SPACE TEMPERATURE AND LESS THAN 75°F (ADJ.)
- THE INDOOR FAN IS ON
- THE UNIT HAS A VALID SUPPLY AIR TEMPERATURE INPUT

THE ECONOMIZER MINIMUM POSITION IS ADJUSTED TO PROVIDE A CONSTANT AMOUNT OF OUTDOOR AIR. IF THE FAN IS ON HIGH SPEED, THE ECONOMIZER MINIMUM POSITION WILL BE SET TO 20% OPEN (ADJ.). IF THE FAN IS ON LOW SPEED, THE ECONOMIZER MINIMUM POSITION WILL BE SET TO 33% OPEN (ADJ.).

IF ALL PRECEDING CONDITIONS ARE TRUE, THE ECONOMIZER PID LOOP MODULATES THE DAMPER BETWEEN THE MINIMUM POSITION AND 100% OPEN.

DURING ECONOMIZER OPERATION, THE ECONOMIZER POSITION IS REDUCED AS THE SAT FALLS BELOW 50°F ± 5°F, BUT NEVER CLOSES BELOW THE APPLICABLE MINIMUM POSITION.

SINGLE ZONE CONSTANT AIR VOLUME ROOFTOP UNIT DETAIL (AC1-A)

SCALE NONE 1

ARCHITECTS
WLC
CLIENT FOCUSED • PASSION DRIVEN
SOUTHERN CALIFORNIA
8163 ROCHESTER AVENUE, SUITE 100
RANCHO CUCAMONGA
CALIFORNIA 91730-0729
TEL: 909-987-0909
www.wlcarchitects.com

LONGFELLOW ELEMENTARY SCHOOL
HVAC REPLACEMENT
COMPTON UNIFIED SCHOOL DISTRICT
1101 S DWIGHT AVE.
COMPTON, CA 90220

LICENSED ARCHITECT MARK GRAHAM C-26046 03-31-19 STATE OF CALIFORNIA

REGISTERED PROFESSIONAL ENGINEER ABBY BANERJEE No. M29253 Exp. 6/30/19 MECHANICAL STATE OF CALIFORNIA

CONSULTANT

IDENTIFICATION STAMP
DIV. OF THE STATE ARCHITECT
OFFICE OF REGULATION SERVICES
APPL 03-118423
AC ___ FLS ___ SS ___
DATE MAR 06 2019
FILE: 19-23

NO	DATE	BY	DESCRIPTION

REVISIONS

DRAWN: KC	CHECKED:
DATE: 3/6/2018	SCALE:
PROJECT NUMBER: 570064	

WIRING DIAGRAM DETAILS

DRAWING NUMBER: M-5.2

EXISTING TRANE UNIT

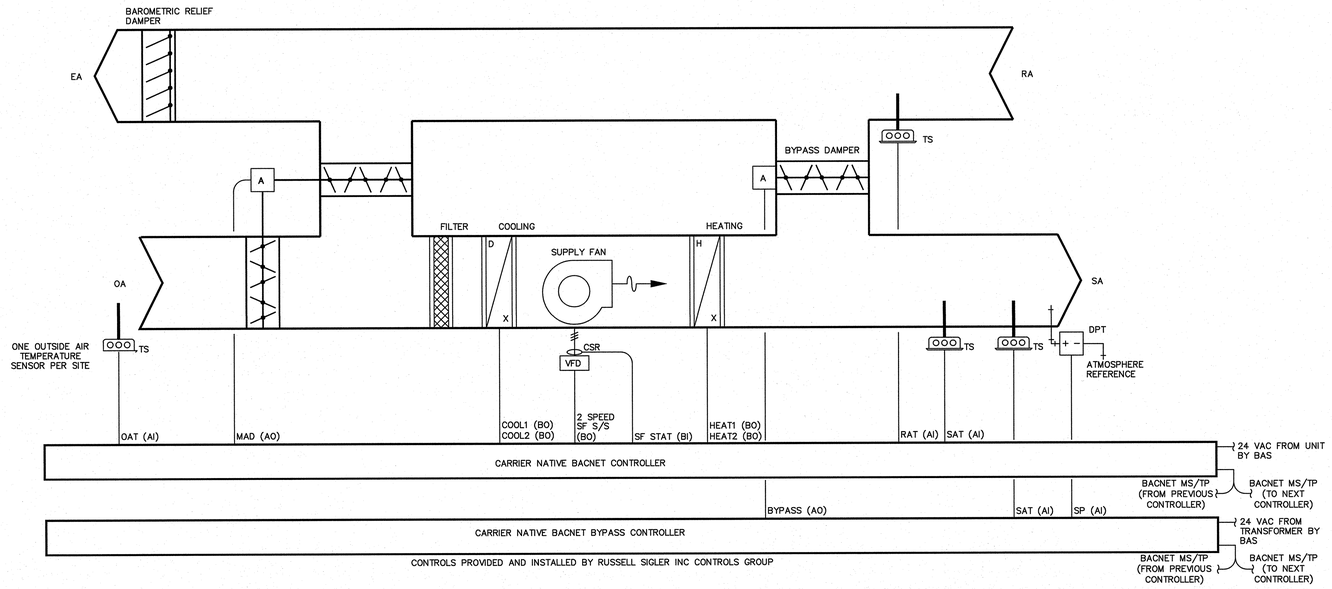

CHANGEOVER/BYPASS SYSTEM

VWT ROOFTOP UNIT AND BYPASS DAMPER DETAIL [(E)AC1-E AND BD1-E]

SCALE NONE 1

SEQUENCE OF OPERATION

INDOOR FAN
DURING OCCUPIED PERIODS, THE FAN SHALL OPERATE CONTINUOUSLY. DURING UNOCCUPIED PERIODS, THE FAN SHALL OPERATE WHEN THE SPACE TEMPERATURE EXCEEDS THE UNOCCUPIED HEATING OR COOLING SETPOINTS. THE FAN OPERATES AT 1 OF 2 SPEEDS DEPENDING ON THE MODE OF OPERATION AND LOAD CONDITIONS. DURING VENT ONLY MODE AND LOW LOAD CONDITIONS, THE FAN OPERATES AT LOW SPEED. IF LOAD CONDITIONS INCREASE OR IF THERE IS A CALL FOR HEATING, THE FAN OPERATES AT HIGH SPEED.

HEATING MODE
THE CONTROLLER WILL STAGE THE HEATING TO MAINTAIN ITS DISCHARGE AIR TEMPERATURE HEATING SETPOINT. TO PREVENT SHORT CYCLING, THE STAGE WILL HAVE A USER DEFINABLE (ADJ.) MINIMUM RUNTIME. THE HEATING WILL BE ENABLED BY LINKAGE MASTER (SEE TERMINAL DETAIL BELOW).

COOLING MODE
THE CONTROLLER WILL STAGE THE COOLING TO MAINTAIN ITS DISCHARGE AIR TEMPERATURE COOLING SETPOINT. TO PREVENT SHORT CYCLING, THE STAGE WILL HAVE A USER DEFINABLE (ADJ.) MINIMUM RUNTIME. THE COOLING WILL BE ENABLED BY LINKAGE MASTER (SEE TERMINAL DETAIL BELOW).

ECONOMIZER
THE FOLLOWING CONDITIONS MUST BE TRUE FOR ECONOMIZER OPERATION:
- THE OUTDOOR AIR TEMPERATURE IS LESS THAN THE SPACE TEMPERATURE AND LESS THAN 75°F (ADJ.)
- THE INDOOR FAN IS ON
- THE UNIT HAS A VALID SUPPLY AIR TEMPERATURE INPUT

THE ECONOMIZER MINIMUM POSITION IS ADJUSTED TO PROVIDE A CONSTANT AMOUNT OF OUTDOOR AIR. IF THE FAN IS ON HIGH SPEED, THE ECONOMIZER MINIMUM POSITION WILL BE SET TO 20% OPEN (ADJ.). IF THE FAN IS ON LOW SPEED, THE ECONOMIZER MINIMUM POSITION WILL BE SET TO 33% OPEN (ADJ.).

IF ALL PRECEDING CONDITIONS ARE TRUE, THE ECONOMIZER PID LOOP MODULATES THE DAMPER BETWEEN THE MINIMUM POSITION AND 100% OPEN.

DURING ECONOMIZER OPERATION, THE ECONOMIZER POSITION IS REDUCED AS THE SAT FALLS BELOW 50°F ± 5°F, BUT NEVER CLOSES BELOW THE APPLICABLE MINIMUM POSITION.

VVT BYPASS DAMPER
WHILE THE INDOOR FAN RUNS, THE BYPASS SHALL MODULATE TO MAINTAIN DUCT PRESSURE AT A CONFIGURABLE SETPOINT. IF THE STATIC PRESSURE IS BELOW THE STATIC PRESSURE SETPOINT THE BYPASS DAMPER WILL MODULATE CLOSE TO BUILD DUCT STATIC PRESSURE UNTIL THE STATIC PRESSURE IS AT SETPOINT. IF THE STATIC PRESSURE IS ABOVE THE STATIC PRESSURE SETPOINT THE BYPASS DAMPER WILL MODULATE OPEN TO RELIEVE DUCT STATIC PRESSURE UNTIL THE STATIC PRESSURE IS AT SETPOINT.

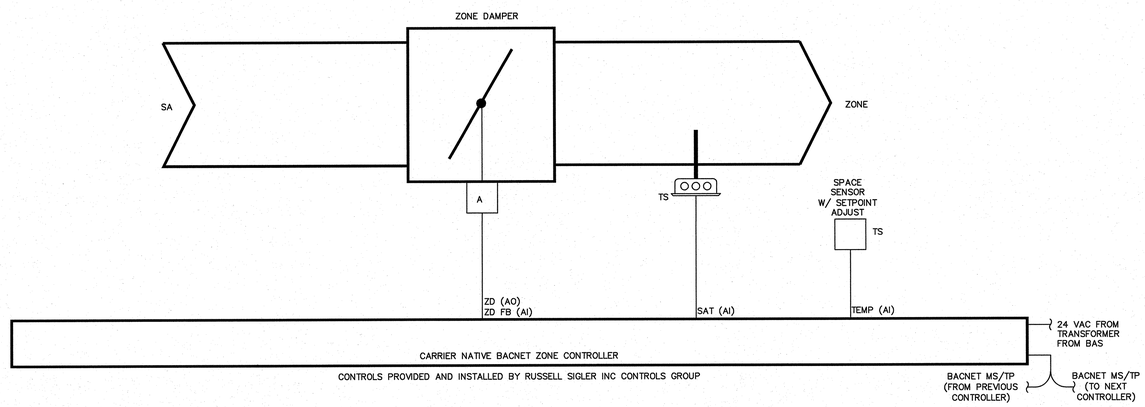

CHANGEOVER/BYPASS SYSTEM

SEQUENCE OF OPERATION

LINKAGE
THE CONTROL SYSTEM USES LINKAGE TO EXCHANGE DATA BETWEEN THE ZONE TERMINALS AND THEIR AIR SOURCE TO FORM A COORDINATED HVAC SYSTEM. THE SYSTEM'S AIR SOURCE CONTROLLER, ZONE CONTROLLERS, AND BYPASS CONTROLLER ARE LINKED SO THAT THEIR DATA EXCHANGE CAN BE MANAGED BY ONE ZONE CONTROLLER CONFIGURED AS THE VVT MASTER. THE VVT MASTER GATHERS THE FOLLOWING INFORMATION FROM THE SLAVE ZONE CONTROLLERS: OCCUPANCY STATUS, SETPOINTS, ZONE TEMPERATURE, DAMPER POSITION, AND OPTIMAL START DATA.

LINKAGE MASTER (HIGHEST ADDRESSED ZONE CONTROLLER IN VVT SYSTEM, TO BE DETERMINED BY CONTROLS CONTRACTOR)
THE VVT MASTER DETERMINES SYSTEM OPERATION BY PRIORITIZING HEATING AND COOLING REQUIREMENTS FROM ALL THE ZONES BASED ON THEIR OCCUPANCY AND DEMAND. THE VVT MASTER SCANS THE SYSTEM CONTINUOUSLY TO DETERMINE IF ANY ZONES ARE OCCUPIED.

ESTABLISHING COOLING MODE
THE VVT MASTER WILL SCAN ALL ZONES TO COLLECT SYSTEM TEMPERATURE DEMAND DATA. DEMAND SHALL BE THE DIFFERENCE BETWEEN THE ZONE SETPOINT AND THE ACTUAL ZONE TEMPERATURE. THE REFERENCE ZONE, DURING EACH SCAN, SHALL BE THE ZONE WITH THE GREATEST COOLING OR HEATING DEMAND. ZONE CALLERS SHALL BE DETERMINE BY THE TOTAL NUMBER OF ZONES WITH COOLING OR HEATING DEMANDS OF 1.5°F OR MORE ABOVE THE ZONES.

IF THE TOTAL NUMBER OF ZONES REQUESTING COOLING OUTNUMBER THOSE REQUESTING HEATING, AND THE OUTSIDE AIR TEMPERATURE IS ABOVE THE COOLING LOCKOUT LIMIT OF 60°F (ADJ.), THE VVT MASTER SHALL REQUEST THE CENTRAL UNIT TO ENTER THE COOLING MODE. ALL ZONES REQUIRING HEATING SHALL POSITION THEIR ZONE DAMPERS TO THEIR CONFIGURED MINIMUM DAMPER POSITION WITH THE CENTRAL UNIT IN THE COOLING MODE.

SWITCHING TO HEATING
IF THE TOTAL NUMBER OF ZONES REQUESTING HEATING OUTNUMBER THOSE REQUESTING COOLING, AND THE OUTSIDE AIR TEMPERATURE IS BELOW THE HEATING LOCKOUT LIMIT OF 65°F (ADJ.), THE VVT MASTER SHALL REQUEST THE CENTRAL UNIT TO ENTER THE HEATING MODE. ALL ZONES REQUIRING COOLING SHALL POSITION THEIR ZONE DAMPERS TO THEIR CONFIGURED MINIMUM OR VENTILATION DAMPER POSITION DURING SYSTEM CHANGE-OVER.

VVT ZONE DAMPER
DURING OCCUPIED PERIODS, THE ZONE CONTROLLER WILL OPEN AND CLOSE TO MAINTAIN SPACE TEMPERATURE WITHIN SETPOINTS. IF THE MODE OF THE UNIT MATCHES THE DEMAND OF THE ZONE, THE DAMPER WILL OPEN PROPORTIONALLY TO SPACE TEMPERATURE (DIRECT ACTING FOR COOLING, REVERSE ACTING FOR HEATING). IF THE ZONE IS AT SETPOINT AND THE DUCT TEMPERATURE IS NEUTRAL, THE DAMPER WILL OPEN FOR VENTILATION. OTHERWISE, THE ZONE DAMPER WILL GO TO ITS MINIMUM POSITION.

AIR TERMINAL DETAIL (ZD1-E THRU ZD5-E)

SCALE NONE 2

ARCHITECTS
WLC
CLIENT FOCUSED • PASSION DRIVEN

SOUTHERN CALIFORNIA
8163 ROCHESTER AVENUE, SUITE 100
RANCHO CUCAMONGA
CALIFORNIA 91730-0729

TEL: 909-987-0909

www.wlcarchitects.com

LONGFELLOW ELEMENTARY SCHOOL HVAC REPLACEMENT

COMPTON UNIFIED SCHOOL DISTRICT

1101 S DWIGHT AVE.
COMPTON, CA 90220

LICENSED ARCHITECT MARK GRAHAM C-26046 03-31-19 STATE OF CALIFORNIA

REGISTERED PROFESSIONAL ENGINEER ABBY BANDEKEH No. M29253 Exp. 6/30/19 MECHANICAL STATE OF CALIFORNIA

CONSULTANT

IDENTIFICATION STAMP
DIV. OF THE STATE ARCHITECT
OFFICE OF REGULATION SERVICES
APPL 03-118423
AC FLS SS EV
DATE MAR 26 2018
FILE: 19-23

NO	DATE	BY	DESCRIPTION
			REVISIONS

DRAWN: KC	CHECKED:
DATE: 3/6/2018	SCALE:
PROJECT NUMBER: 570064	

WIRING DIAGRAM DETAILS

DRAWING NUMBER: M-5.3

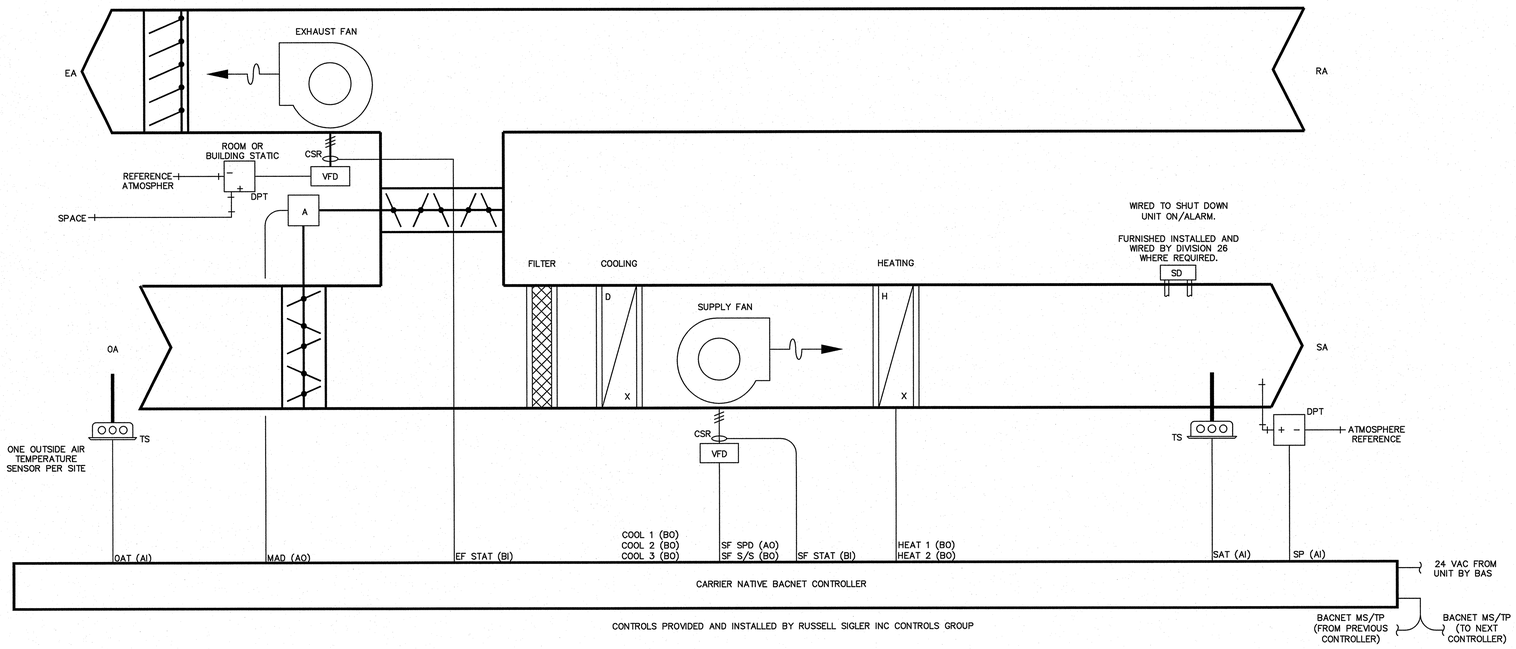

VARIABLE AIR VOLUME ROOFTOP UNIT DETAIL (AC1-C, AC1-D, AC1-F, AC1-G AND AC1-K)

SCALE NONE 1

SEQUENCE OF OPERATION

SUPPLY FAN
DURING OCCUPIED PERIODS, THE SUPPLY FAN SHALL OPERATE CONTINUOUSLY. DURING UNOCCUPIED PERIODS, THE SUPPLY FAN SHALL OPERATE WHEN THE SPACE TEMPERATURE EXCEEDS THE UNOCCUPIED HEATING OR COOLING SETPONTS .THE SUPPLY FAN SHALL MODULATE TO MAINTAIN A DUCT STATIC PRESSURE SETPOINT OF 0.5 INCH WC (ADJ.).

HEATING MODE
THE CONTROLLER WILL MEASURE THE ZONE TEMPERATURE AND STAGE THE HEATING TO MAINTAIN ITS DISCHARGE AIR TEMPERATURE HEATING SETPOINT. TO PREVENT SHORT CYCLING, THE STAGE WILL HAVE A USER DEFINABLE (ADJ.) MINIMUM RUNTIME. THE HEATING WILL BE ENABLED BY LINKAGE MASTER (SEE AIR TERMINAL DETAIL BELOW).

COOLING MODE
THE CONTROLLER STAGE THE COOLING TO MAINTAIN ITS DISCHARGE AIR TEMPERATURE COOLING SETPOINT. TO PREVENT SHORT CYCLING, THE STAGE WILL HAVE A USER DEFINABLE (ADJ.) MINIMUM RUNTIME. THE COOLING WILL BE ENABLED BY LINKAGE MASTER (SEE AIR TERMINAL DETAIL BELOW).

ECONOMIZER
THE FOLLOWING CONDITIONS MUST BE TRUE FOR ECONOMIZER OPERATION:
- THE OUTDOOR AIR TEMPERATURE IS LESS THAN THE SPACE TEMPERATURE AND LESS THAN 75°F (ADJ.)
- THE INDOOR FAN IS ON
- THE UNIT HAS A VALID SUPPLY AIR TEMPERATURE INPUT

THE ECONOMIZER MINIMUM POSITION IS ADJUSTED TO PROVIDE A CONSTANT AMOUNT OF OUTDOOR AIR. THE CONTROLLER WILL DETERMINE THE REQUIRED MINIMUM ECONOMIZER POSITION (0–100%) BASED ON THE FAN'S ACTUAL OPERATION SPEED. IF THE FAN OPERATES AT MAXIMUM SPEED, THE ECONOMIZER MINIMUM POSITION WILL BE SET TO 20% (ADJ.). WHEN THE FAN OPERATES AT ITS LOWEST SPEED, THE ECONOMIZER MINIMUM POSITION WILL BE SET TO 33% (ADJ.). FOR ANY FAN SPEED BETWEEN THE MINIMUM AND MAXIMUM SPEEDS, THE CONTROLLER SHALL CALCULATE A MINIMUM ECONOMIZER POSITION BY A LINEAR INTERPOLATION BETWEEN THESE TWO VALUES. WHEN COOLING IS REQUIRED, IF ALL PRECEDING CONDITIONS ARE TRUE, THE ECONOMIZER PID LOOP MODULATES THE DAMPER BETWEEN THE MINIMUM POSITION AND 100% OPEN TO MAINTAIN THE SUPPLY AIR SETPOINT..

POWER EXHAUST
THE EXHAUST FAN SHALL BE ENABLED WHEN SUPPLY FAN IS RUNNING AND SHALL MODULATE TO MAINTAIN THE ROOM PRESSURE SET POINT (AS DETERMINED BY AIR BALANCER). NOT CONTROLLED THROUGH EMS.

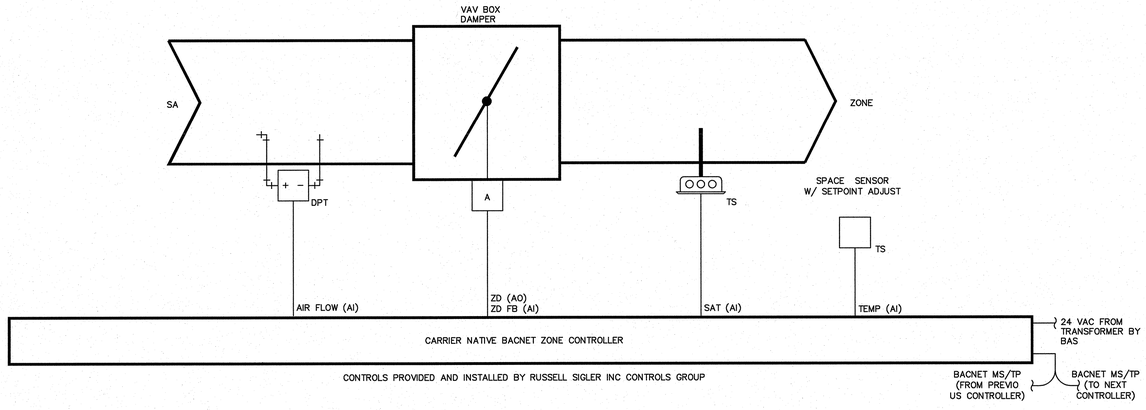

AIR TERMINAL DETAIL (TYPICAL VAV ZONE)

SCALE NONE 2

SEQUENCE OF OPERATION

LINKAGE
THE CONTROL SYSTEM USES LINKAGE TO EXCHANGE DATA BETWEEN THE ZONE TERMINALS AND THEIR AIR SOURCE TO FORM A COORDINATED HVAC SYSTEM. THE SYSTEM'S AIR SOURCE CONTROLLER AND ZONE CONTROLLERS ARE LINKED SO THAT THEIR DATA EXCHANGE CAN BE MANAGED BY ONE ZONE CONTROLLER CONFIGURED AS THE VAV MASTER. THE VAV MASTER GATHERS THE FOLLOWING INFORMATION FROM THE SLAVE ZONE CONTROLLERS: OCCUPANCY STATUS, SETPOINTS, ZONE TEMPERATURE, DAMPER POSITION, AND OPTIMAL START DATA.

LINKAGE MASTER OPERATION (HIGHEST ADDRESSED ZONE CONTROLLER IN VAV SYSTEM, TO BE DETERMINED BY CONTROLS CONTRACTOR)
THE VAV MASTER WILL SCAN THE ZONES FOR COOLING DEMAND, HEATING DEMAND, AND OCCUPANCY. THE LINKAGE MASTER WILL CALCULATE A WEIGHTED AVERAGE COOLING AND HEATING DEMAND SEPARATELY. IF ANY ZONE IN THE SYSTEM IS OCCUPIED, IT WILL SET THE UNIT TO OCCUPIED MODE AND SEND THE LARGEST DEMAND TO THE UNIT TO STAGE HEATING AND COOLING PROPERLY.

ESTABLISHING COOLING MODE
THE VAV MASTER WILL SCAN ALL ZONES TO COLLECT SYSTEM TEMPERATURE DEMAND DATA. DEMAND SHALL BE THE DIFFERENCE BETWEEN THE ZONE SETPOINT AND THE ACTUAL ZONE TEMPERATURE. THE REFERENCE ZONE, DURING EACH SCAN, SHALL BE THE ZONE WITH THE GREATEST COOLING OR HEATING DEMAND. ZONE CALLERS SHALL BE DETERMINE BY THE TOTAL NUMBER OF ZONES WITH COOLING OR HEATING DEMANDS OF 1.5°F OR MORE ABOVE THE ZONES.

IF THE TOTAL NUMBER OF ZONES REQUESTING COOLING OUTNUMBER THOSE REQUESTING HEATING, AND THE OUTSIDE AIR TEMPERATURE IS ABOVE THE COOLING LOCKOUT LIMIT OF 60°F (ADJ.), THE VAV MASTER SHALL REQUEST THE CENTRAL UNIT TO ENTER THE COOLING MODE. ALL ZONES REQUIRING HEATING SHALL POSITION THEIR ZONE DAMPERS TO THEIR CONFIGURED MINIMUM DAMPER POSITION WITH THE CENTRAL UNIT IN THE COOLING MODE.

SWITCHING TO HEATING
IF THE TOTAL NUMBER OF ZONES REQUESTING HEATING OUTNUMBER THOSE REQUESTING COOLING, AND THE OUTSIDE AIR TEMPERATURE IS BELOW THE HEATING LOCKOUT LIMIT OF 65°F (ADJ.), THE VAV MASTER SHALL REQUEST THE CENTRAL UNIT TO ENTER THE HEATING MODE. ALL ZONES REQUIRING COOLING SHALL POSITION THEIR ZONE DAMPERS TO THEIR CONFIGURED MINIMUM OR VENTILATION DAMPER POSITION DURING SYSTEM CHANGE–OVER.

VAV ZONE CONTROLLER
PROVIDES PRESSURE–INDEPENDENT ZONE TEMPERATURE CONTROL BY MODULATING ITS BUILT–IN DAMPER ACTUATOR TO CONTROL THE FLOW OF PRIMARY AIR INTO THE ZONE. THE DAMPER MODULATES THE AIRFLOW SETPOINT BETWEEN THE MODE'S CONFIGURABLE MINIMUM AND MAXIMUM AIRFLOW BASED ON THE OCCUPANCY STATUS OF THE ZONE. THIS MINIMUM INSURES SUFFICIENT MINIMUM AIRFLOW AT THE AIR SOURCE AND SUFFICIENT VENTILATION TO THE ZONE DURING OCCUPIED PERIODS. (DIRECT ACTING FOR COOLING, REVERSE ACTING FOR HEATING).

ARCHITECTS
WLC
CLIENT FOCUSED • PASSION DRIVEN

SOUTHERN CALIFORNIA
8163 ROCHESTER AVENUE, SUITE 100
RANCHO CUCAMONGA
CALIFORNIA 91730-0729

TEL: 909-987-0909

www.wlcarchitects.com

LONGFELLOW ELEMENTARY SCHOOL HVAC REPLACEMENT

COMPTON UNIFIED SCHOOL DISTRICT

1101 S DWIGHT AVE.
COMPTON, CA 90220

LICENSED ARCHITECT MARK GRAHAM C-26046 03-31-19 STATE OF CALIFORNIA

REGISTERED PROFESSIONAL ENGINEER ABBY BANDAREE No. M29253 Exp. 6/30/19 MECHANICAL STATE OF CALIFORNIA

CONSULTANT

IDENTIFICATION STAMP
DIV. OF THE STATE ARCHITECT
OFFICE OF REGULATION SERVICES
APPL 03-118423
AC FLS SS EY
DATE MAR 0 6 2018
FILE: 19-23

NO	DATE	BY	DESCRIPTION
1			REVISIONS

DRAWN: KC	CHECKED:
DATE: 3/6/2018	SCALE:
PROJECT NUMBER: 570064	

WIRING DIAGRAM DETAILS

DRAWING NUMBER: M-5.4

SYSTEM POINT LIST

PACKAGED ROOFTOP UNIT – VVT WITH BYPASS – GAS/ELECTRIC	GRAPHIC	HARDWARE INPUT	HARDWARE OUTPUT	SOFTWARE POINT	DEFAULT VALUE	HIGH ANALOG	LOW ANALOG	BINARY	LATCH DIAGNOSTIC	SENSOR FAIL	COMMUNICATION FAIL	DIAGNOSTICS	NOTES:
SYSTEM POINT DESCRIPTION	POINT TYPE					ALARMS							
UNIT ENABLE/DISABLE	X			X							X		
SYSTEM MODE	X												
SUPPLY FAN CONTROL	X	BO						X				FAN FAIL	
SUPPLY FAN STATUS	X	BI						X				FAN FAIL	
BYPASS DAMPER CONTROL	X	AO											
BYPASS DAMPER POSITION FEEDBACK	X	AI											
SUPPLY AIR TEMPERATURE	X	AI				X	X			X		SENSOR FAIL	
SUPPLY AIR TEMPERATURE COOLING SETPOINT	X			AV	65°F								
SUPPLY AIR TEMPERATURE HEATING SETPOINT	X			AV	110°F								
RETURN AIR TEMPERATURE	X	AI											
MIXED AIR TEMPERATURE	X	AI											
SUPPLY AIR DUCT STATIC PRESSURE	X	AI				X	X					SENSOR FAIL	
SUPPLY AIR DUCT STATIC PRESSURE SETPOINT	X			AV									
ECONOMIZER DAMPERS CONTROL	X	AO											
DAMPER POSITION FEEDBACK	X	AI		AV									
DAMPER MINIMUM POSITION SETPOINT	X	AO		AV	15%								
HEAT STAGES CONTROL	X	BO											EACH STAGE
OUTDOOR AIR TEMPERATURE	X	AI											NOTE 1.
OUTDOOR AIR HUMIDITY	X	AI											NOTE 1.
HEAT FAIL		BI						X					
DIRTY FILTER	X	BI						X				FILTER STATUS – DIRTY	
EVAPORATOR		AI								X		EVAPORATOR TEMPERATURE SENSOR FAIL	
LOW PRESSURE CONTROL		BI						X				LOW PRESSURE DIAGNOSTIC	
CONDENSER		AI								X		CONDENSER TEMPERATURE SENSOR FAIL	
COMPRESSOR TRIP	X	BI						X				COMPRESSOR DIAGNOSTIC	
COMPRESSOR CONTACTORS CONTROL	X	BO						X					EACH STAGE
COMPRESSOR CONTACTORS STATUS	X	BI						X					EACH STAGE
CONDENSER FAN CONTACT STATUS		BI						X					
RUNTIME – MAINTENANCE REQUIRED				BV	2000 HOURS							MAINTENANCE REQUIRED	
HEAT STATUS	X			BV									

GENERAL NOTES:

NOTE 1. CAN BE COMMUNICATED VALUE

SYSTEM POINT LIST

PACKAGED ROOFTOP UNIT – VAV GAS/ELECTRIC	GRAPHIC	HARDWARE INPUT	HARDWARE OUTPUT	SOFTWARE POINT	DEFAULT VALUE	HIGH ANALOG	LOW ANALOG	BINARY	LATCH DIAGNOSTIC	SENSOR FAIL	COMMUNICATION FAIL	DIAGNOSTICS	NOTES:
SYSTEM POINT DESCRIPTION	POINT TYPE					ALARMS							
UNIT ENABLE/DISABLE	X			X							X		
SYSTEM MODE	X												
SUPPLY FAN CONTROL	X	BO						X				FAN FAIL	
SUPPLY FAN STATUS	X	BI						X				FAN FAIL	
SUPPLY FAN VFD. MAX OCC.				AV	100%								
SUPPLY VFD SPEED CONTROL	X	AO											
SUPPLY VFD SPEED FEEDBACK	X	AI											
EXHAUST FAN STATUS	X	BI						X					
SUPPLY AIR TEMPERATURE	X	AI				X	X			X		SENSOR FAIL	
SUPPLY AIR TEMPERATURE COOLING SETPOINT	X			AV	65°F								
SUPPLY AIR TEMPERATURE HEATING SETPOINT	X			AV	110°F								
RETURN AIR TEMPERATURE	X	AI											
MIXED AIR TEMPERATURE	X	AI											
SUPPLY AIR DUCT STATIC PRESSURE	X	AI				X	X					SENSOR FAIL	
SUPPLY AIR DUCT STATIC PRESSURE SETPOINT	X			AV									
ECONOMIZER DAMPERS CONTROL	X	AO											
DAMPER POSITION FEEDBACK	X	AI		AV	15%								
DAMPER MINIMUM POSITION SETPOINT	X			AV	15%								
HEAT STAGES CONTROL	X	BO											EACH STAGE
OUTDOOR AIR TEMPERATURE	X	AI											NOTE 1.
OUTDOOR AIR HUMIDITY	X	AI											NOTE 1.
HEAT FAIL		BI						X					
DIRTY FILTER	X	BI						X				FILTER STATUS – DIRTY	
EVAPORATOR		AI								X		EVAPORATOR TEMPERATURE SENSOR FAIL	
LOW PRESSURE CONTROL		BI						X				LOW PRESSURE DIAGNOSTIC	
CONDENSER		AI								X		CONDENSER TEMPERATURE SENSOR FAIL	
COMPRESSOR TRIP	X	BI						X				COMPRESSOR DIAGNOSTIC	
COMPRESSOR CONTACTORS CONTROL	X	BO						X					EACH STAGE
COMPRESSOR CONTACTORS STATUS	X	BI						X					EACH STAGE
CONDENSER FAN CONTACT STATUS		BI						X					
RUNTIME – MAINTENANCE REQUIRED				BV	2000 HOURS							MAINTENANCE REQUIRED	
HEAT STATUS	X			BV									

GENERAL NOTES:

NOTE 1. CAN BE COMMUNICATED VALUE

SYSTEM POINT LIST

Package Rooftop Unit Constant Volume Single Zone	GRAPHIC	HARDWARE INPUT	HARDWARE OUTPUT	SOFTWARE POINT	DEFAULT VALUE	HIGH ANALOG	LOW ANALOG	BINARY	LATCH DIAGNOSTIC	SENSOR FAIL	COMMUNICATION FAIL	DIAGNOSTICS	NOTES:
SYSTEM POINT DESCRIPTION	POINT TYPE					ALARMS							
UNIT CONTROLLER COMMUNICATIONS	X										X		
SPACE SENSOR – TEMPERATURE	X	AI							X	X		TEMPERATURE SENSOR FAIL	
SPACE SENSOR – LOCAL SETPOINT	X	AI								X		LOCAL SETPOINT FAIL	
SPACE SENSOR – ON/CANCEL		BI											
SUPPLY FAN STATUS	X	BI								X		FAN FAIL	
SUPPLY FAN START/STOP	X		BO										
OCCUPIED COOLING SETPOINT	X			AV	74°F	110°F	40°F						
OCCUPIED HEATING SETPOINT	X			AV	71°F	105°F	40°F						
UNOCCUPIED COOLING SETPOINT	X			AV	85°F								
UNOCCUPIED HEATING SETPOINT	X			AV	60°F								
COMPRESSOR CONTROL	X		BO										
HEAT STATUS	X			X									EACH STAGE
MODE: HEAT/COOL	X			X									
HEATING SETPOINT	X			AV	68°f								
EXHAUST FAN STATUS	X	BI								X		FAN FAIL	
EXHAUST MODE	X			BV									
CONDENSER FAN STATUS	X	BI											CONDENSER FANS A & B
SUPPLY AIR TEMPERATURE	X	AI								X			
COOLING STAGES ACTIVE	X			X									EACH STAGE
ECONOMIZER DAMPER POSITION COMMAND	X		AO										
ECONOMIZER DAMPER POSITION	X	AI											
ECONOMIZER MINIMUM POSITION SETPOINT	X			AV	15%								
OUTDOOR AIR TEMPERATURE	X	AI								X			
RETURN AIR TEMPERATURE	X	AI								X			
CO2 CONCENTRATION – SPACE	X	AI											
TIMED OVERRIDE REQUEST		BI											
TIMED OVERRIDE REQUEST CANCEL		BI											
OCCUPY/UNOCCUPY MODE	X												
PRIORITY SHUTDOWN	X							X					
DIRTY FILTER	X							X					
MANUAL RESET REQUIRED	X								X				

GENERAL NOTES:

SYSTEM POINT LIST

VAV TERMINAL UNIT WITH DDC CONTROLS	GRAPHIC	HARDWARE INPUT	HARDWARE OUTPUT	SOFTWARE POINT	DEFAULT VALUE	HIGH ANALOG	LOW ANALOG	BINARY	LATCH DIAGNOSTIC	SENSOR FAIL	COMMUNICATION FAIL	DIAGNOSTICS	NOTES:
SYSTEM POINT DESCRIPTION	POINT TYPE					ALARMS							
SPACE SENSOR – TEMPERATURE	X	AI							X	X		TEMP SENSOR FAIL	
SPACE SENSOR – SETPOINT	X	AI								X		LOCAL SETPOINT FAIL	
SPACE SENSOR – ON/CANCEL		BI											
AIRFLOW CFM	X	AI								X		SENSOR FAIL	
DAMPER	X		AO										
SUPPLY AIR TEMPERATURE SENSOR	X	AI				110°F	35°F		X	X		TEMP SENSOR FAIL	
MINIMUM COOLING AIRFLOW SETPOINT	X			AV									SEE VAV SCHEDULE FOR VALUES
MAXIMUM COOLING AIRFLOW SETPOINT				AV									SEE VAV SCHEDULE FOR VALUES
MINIMUM HEATING AIRFLOW SETPOINT	X			AV									SEE VAV SCHEDULE FOR VALUES
MAXIMUM HEATING AIRFLOW SETPOINT				AV									SEE VAV SCHEDULE FOR VALUES
OCCUPIED COOLING SETPOINT	X			AV	74°F	110°F	40°F						
OCCUPIED HEATING SETPOINT	X			AV	71°F	105°F	40°F						
UNOCCUPIED COOLING SETPOINT	X			AV	85°F								
UNOCCUPIED HEATING SETPOINT	X			AV	60°F								
OCCUPIED BY-PASS TIME OVERRIDE				AV	2 HOURS								
BAS COMMUNICATION STATE	X			BV							X		
SPACE CARBON DIOXIDE SENSOR	X	AI				600 PPM				X			WHERE SHOWN OM MECHANICAL DRAWINGS

GENERAL NOTES:

SYSTEM POINT LIST

VVT ZONE DAMPERS WITH DDC CONTROLS	GRAPHIC	HARDWARE INPUT	HARDWARE OUTPUT	SOFTWARE POINT	DEFAULT VALUE	HIGH ANALOG	LOW ANALOG	BINARY	LATCH DIAGNOSTIC	SENSOR FAIL	COMMUMICATION FAIL	DIAGNOSTICS	NOTES:
SYSTEM POINT DESCRIPTION	POINT TYPE					ALARMS							
SPACE SENSOR – TEMPERATURE	X	AI							X	X		TEMPERATURE SENSOR FAIL	
SPACE SENSOR – SETPOINT	X	AI								X		LOCAL SETPOINT FAIL	
SPACE SENSOR – ON/CANCEL		BI											
DAMPER	X		AO										
SUPPLY AIR TEMPERATURE SENSOR	X	AI				110°F	35°F		X	X		TEMPERATURE SENSOR FAIL	
MINIMUM COOLING DAMPER POSITION SETPOINT	X			AV									SEE VAV SCHEDULE FOR VALUES
MAXIMUM COOLING DAMPER POSITION SETPOINT				AV									SEE VAV SCHEDULE FOR VALUES
MINIMUM HEATING DAMPER POSITION SETPOINT	X			AV									SEE VAV SCHEDULE FOR VALUES
MAXIMUM HEATING DAMPER POSITION SETPOINT				AV									SEE VAV SCHEDULE FOR VALUES
OCCUPIED COOLING SETPOINT	X			AV	74°F	110°F	40°F						
OCCUPIED HEATING SETPOINT	X			AV	71°F	105°F	40°F						
UNOCCUPIED COOLING SETPOINT	X			AV	85°F								
UNOCCUPIED HEATING SETPOINT	X			AV	60°F								
MODE: HEATING/COOLING	X			AV	2 HOURS								
OCCUPIED BY-PASS TIME OVERRIDE				AV	2 HOURS								
BAS COMMUNICATION STATE	X			BV							X		
SPACE CARBON DIOXIDE SENSOR	X	AI				600 PPM				X			WHERE SHOWN ON MECHANICAL DRAWINGS

GENERAL NOTES:

SYSTEM POINT LIST

SCALE NONE 1

ARCHITECTS WLC
CLIENT FOCUSED • PASSION DRIVEN

SOUTHERN CALIFORNIA
8163 ROCHESTER AVENUE, SUITE 100
RANCHO CUCAMONGA
CALIFORNIA 91730-0729

TEL: 909-987-0909
www.wlcarchitects.com

LONGFELLOW ELEMENTARY SCHOOL
HVAC REPLACEMENT
COMPTON UNIFIED SCHOOL DISTRICT
1101 S DWIGHT AVE.
COMPTON, CA 90220

LICENSED ARCHITECT MARK GRAHAM C-26046 03-31-19 STATE OF CALIFORNIA

REGISTERED PROFESSIONAL ENGINEER ABBY BANERJEE No. M29253 Exp. 6/30/19 MECHANICAL STATE OF CALIFORNIA

CONSULTANT

IDENTIFICATION STAMP
DIV. OF THE STATE ARCHITECT
OFFICE OF REGULATION SERVICES
APPL 03-118423
AC — FLS ✓ SS EY
DATE MAR 0 6 2018
FILE: 19-23

NO	DATE	BY	DESCRIPTION
#	REVISIONS		

DRAWN: KC | CHECKED:
DATE: 3/6/2018 | SCALE:
PROJECT NUMBER: 570064

SYSTEM POINT LISTS

DRAWING NUMBER: M-5.5

Project Name:	Longfellow Elementary School - Building A	NRCC-PRF-01-E	Page 2 of 18
Project Address:	1101 S DWIGHT AVE, COMPTON 90220	Calculation Date/Time:	08:15, Mon, Oct 02, 2017
Compliance Scope:	Existing/Alteration	Input File Name:	2017-09-11 Longfellow ES BLDG. A - T-24.cbd16e

A. PROJECT GENERAL INFORMATION

1.	Project Location (city)	COMPTON	8.	Standards Version	Compliance2016
2.	CA Zip Code	90220	9.	Compliance Software (version)	EnergyPro 7.1
3.	Climate Zone	8	10.	Weather File	NEWTONDISS-NSRDB#DP-FLD_722956_CZ2010.epw
4.	Total Conditioned Floor Area In Scope	1,854 ft²	11.	Building Orientation (deg)	29.0 deg
5.	Total Unconditioned Floor Area	692 ft²	12.	Permitted Scope of Work	Existing/Alteration
6.	Total # of Stories (Maintable Above Grade)	1	13.	Building Type(s)	Nonresidential
7.	Total # of dwelling units	0	14.	Elev Type	Naturalvlue

B. COMPLIANCE RESULTS FOR PERFORMANCE COMPONENTS (Annual TDV Energy Use, kBtu/ft²-yr) — § 140.1

BUILDING COMPLIES

1. Energy Component	2. Standard Design (TDV)	3. Proposed Design (TDV)	4. Compliance Margin (TDV)	5. Percent Better than Standard
Space Heating	1.91	2.84	-1.03	-53.9%
Space Cooling	76.69	73.08	3.59	4.7%
Indoor Fans	149.28	63.93	85.35	57.2%
Heat Rejection	--	--	--	--
Pumps & Misc.	--	--	--	--
Domestic Hot Water	6.65	--	--	0.0%
Indoor Lighting	41.86	--	--	0.0%
COMPLIANCE TOTAL	**276.39**	**188.74**	**87.65**	**31.7%**
Receptacle	328.39	358.39	0.0	0.0%
Process	--	--	--	--
Other Ltg.	--	--	--	--
TOTAL	**604.79**	**357.13**	**87.7**	**22.8%**

CA Building Energy Efficiency Standards- 2016 Nonresidential Compliance — Report Version: NRCC-PRF-01-E-08082017-4377 — Report Generated at: 2017-10-02 08:21:55

Project Name:	Longfellow Elementary School - Building A	NRCC-PRF-01-E	Page 3 of 18
Project Address:	1101 S DWIGHT AVE, COMPTON 90220	Calculation Date/Time:	08:15, Mon, Oct 02, 2017
Compliance Scope:	Existing/Alteration	Input File Name:	2017-09-11 Longfellow ES BLDG. A - T-24.cbd16e

C. PRIORITY PLAN CHECK/ INSPECTION ITEMS (In order of highest to lowest TDV energy savings)

1st	Indoor Fans; Check envelope and mechanical
2nd	Space Cooling; Check envelope and mechanical
3rd	Heat Rejection; Check envelope and mechanical
4th	Pumps & Misc.; Check mechanical
5th	Domestic Hot Water; Check mechanical
6th	Indoor Lighting; Check lighting
7th	Space Heating; Check envelope and mechanical

Compliance Margin By Energy Component (from Table B column 4)

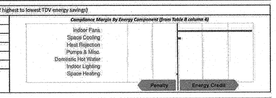

D. EXCEPTIONAL CONDITIONS

The building does not include service water heating. Verify that service water heating is not required and is not included in the design.

E. HERS VERIFICATION

This Section Does Not Apply

F. ADDITIONAL REMARKS

None Provided.

CA Building Energy Efficiency Standards- 2016 Nonresidential Compliance — Report Version: NRCC-PRF-01-E-08082017-4377 — Report Generated at: 2017-10-02 08:21:55

Project Name:	Longfellow Elementary School - Building A	NRCC-PRF-01-E	Page 4 of 18
Project Address:	1101 S DWIGHT AVE, COMPTON 90220	Calculation Date/Time:	08:15, Mon, Oct 02, 2017
Compliance Scope:	Existing/Alteration	Input File Name:	2017-09-11 Longfellow ES BLDG. A - T-24.cbd16e

G. COMPLIANCE PATH & CERTIFICATE OF COMPLIANCE SUMMARY

Identify which building components use the performance or prescriptive path for compliance. "NA" = not in project.
For components that utilize the performance path, indicate the sheet number that includes mandatory notes on plans.

Building Component	Compliance Path	Compliance Forms (required for submittal)	Location of Mandatory Notes on Plans
Envelope	☑	Performance — NRCC-PRF-ENV-DETAILS (section of the NRCC-PRF-01-E)	
	☐	Prescriptive — NRCC-ENV-01 / 02 / 03 / 04 / 05 / 06 / 07-E	
	☐	NA	
Mechanical	☑	Performance — NRCC-PRF-MCH-DETAILS (section of the NRCC-PRF-01-E)	
	☐	Prescriptive — NRCC-MCH-01 / 02 / 03 / 04 / 05 / 06 / 07-E	
	☐	NA	
Domestic Hot Water	☐	Performance — NRCC-PRF-PLB-DETAILS (section of the NRCC-PRF-01-E)	
	☑	Prescriptive — NRCC-PLB-01-E	
	☐	NA	
Lighting (Indoor Conditioned)	☐	Performance — NRCC-PRF-LTI-DETAILS (section of the NRCC-PRF-01-E)	
	☑	Prescriptive — NRCC-LTI-01 / 02 / 03 / 04 / 05-E	
	☐	NA	
Covered Process: Commercial Kitchens	☐	Performance — 53 (section of the NRCC-PRF-01-E)	
	☐	Prescriptive — NRCC-PRC-01-E	
	☑	NA:	
Covered Process: Computer Rooms	☐	Performance — 53 (section of the NRCC-PRF-01-E)	
	☐	Prescriptive — NRCC-PRC-02-E	
	☑	NA:	
Covered Process: Laboratory Exhaust	☐	Performance — 54 (section of the NRCC-PRF-01-E)	
	☐	Prescriptive — NRCC-PRC-01-E	
	☑	NA:	

CA Building Energy Efficiency Standards- 2016 Nonresidential Compliance — Report Version: NRCC-PRF-01-E-08082017-4377 — Report Generated at: 2017-10-02 08:21:55

Project Name:	Longfellow Elementary School - Building A	NRCC-PRF-01-E	Page 5 of 18
Project Address:	1101 S DWIGHT AVE, COMPTON 90220	Calculation Date/Time:	08:15, Mon, Oct 02, 2017
Compliance Scope:	Existing/Alteration	Input File Name:	2017-09-11 Longfellow ES BLDG. A - T-24.cbd16e

H. CERTIFICATE OF INSTALLATION, CERTIFICATE OF ACCEPTANCE & CERTIFICATE OF VERIFICATION SUMMARY (NRCI/NRCA/NRCV) –
Documentation Author to indicate which Certificates must be submitted for the features to be recognized for compliance
See Tables G. and H. in MCH and ETI Details Sections for Acceptance Tests and forms by equipment.

Building Component	Compliance Forms (required for submittal)	Confirmed: Plan	Confirmed: Field
Envelope	☑ NRCI-ENV-01-E - For all buildings	☐	☐
	☐ NRCA-ENV-02-E - NFRC label verification for fenestration	☐	☐
	☑ NRCI-MCH-01-E - For all buildings with Mechanical Systems	☐	☐
Mechanical	☐ NRCA-MCH-02-A - Outdoor Air	☐	☐
	☐ NRCA-MCH-03-A – Constant Volume Single Zone HVAC	☐	☐
	☐ NRCA-MCH-04-H - Air Distribution Duct Leakage	☐	☐
	☐ NRCA-MCH-05-A - Air Economizer Controls	☐	☐
	☐ NRCA-MCH-06-A - Demand Control Ventilation	☐	☐
	☐ NRCA-MCH-07-A – Supply Fan Variable Flow Controls	☐	☐
	☐ NRCA-MCH-08-A - Valve Leakage Test	☐	☐
	☐ NRCA-MCH-09-A – Supply Water Temp Reset Controls	☐	☐
	☐ NRCA-MCH-10-A -Hydronic System Variable Flow Controls	☐	☐
	☐ NRCA-MCH-13-A – Auto Demand Shed Controls	☐	☐
	☐ NRCA-MCH-15-A – Packaged Direct Expansion Units	☐	☐
	☐ NRCA-MCH-18-A- Air Handling Units and Zone Terminal Units.	☐	☐
	☐ NRCA-MCH-14-A- Chilled/Hot Water Energy Storage	☐	☐
	☐ NRCA-MCH-16-A – Thermal Energy Storage	☐	☐
	☐ NRCA-MCH-17-A – Supply Air Temp Reset Controls	☐	☐
	☐ NRCA-MCH-19-A – Condensate Water Temp Reset Controls	☐	☐
	☐ NRCA-MCH-18-A – Energy Monsoring/Heat Controls/Systems	☐	☐
	☐ NRCVMCH-04-N- Duct Leakage Test	☐	☐

CA Building Energy Efficiency Standards- 2016 Nonresidential Compliance — Report Version: NRCC-PRF-01-E-08082017-4377 — Report Generated at: 2017-10-02 08:21:55

Project Name:	Longfellow Elementary School - Building A	NRCC-PRF-01-E	Page 6 of 18
Project Address:	1101 S DWIGHT AVE, COMPTON 90220	Calculation Date/Time:	08:15, Mon, Oct 02, 2017
Compliance Scope:	Existing/Alteration	Input File Name:	2017-09-11 Longfellow ES BLDG. A - T-24.cbd16e

H. CERTIFICATE OF INSTALLATION, CERTIFICATE OF ACCEPTANCE & CERTIFICATE OF VERIFICATION SUMMARY (NRCI/NRCA/NRCV) –
Documentation Author to indicate which Certificates must be submitted for the features to be recognized for compliance
See Tables G. and H. in MCH and ETI Details Sections for Acceptance Tests and forms by equipment.

Building Component	Compliance Forms (required for submittal)	Confirmed: Plan	Confirmed: Field
Plumbing	☐ NRCI-PRC-01-E Refrigerated Warehouse	☐	☐
	☐ NRCA-PRC-05-F - Compressed Air Systems	☐	☐
	☐ NRCA-PRC-01-F - Kitchen Exhaust	☐	☐
	☐ NRCA-PRC-03-F –Garage Exhaust.	☐	☐
Covered Process	☐ NRCA-PRC-04-F - Refrigerated Warehouse- Evaporator Fan Motor Controls	☐	☐
	☐ NRCA-PRC-05-F - Refrigerated Warehouse- Evaporative Condenser Controls	☐	☐
	☐ NRCA-PRC-06-F- Refrigerated Warehouse- Air Cooled Condenser Controls	☐	☐
	☐ NRCA-PRC-07F- Refrigerated Warehouse- Variable Speed Compressor	☐	☐
	☐ NRCA-PRC-08-F- Electrical Resistance Underslab Heating System	☐	☐

CA Building Energy Efficiency Standards- 2016 Nonresidential Compliance — Report Version: NRCC-PRF-01-E-08082017-4377 — Report Generated at: 2017-10-02 08:21:55

Project Name:	Longfellow Elementary School - Building A	NRCC-PRF-01-E	Page 7 of 18
Project Address:	1101 S DWIGHT AVE, COMPTON 90220	Calculation Date/Time:	08:15, Mon, Oct 02, 2017
Compliance Scope:	Existing/Alteration	Input File Name:	2017-09-11 Longfellow ES BLDG. A - T-24.cbd16e

I. ENVELOPE GENERAL INFORMATION (See NRCC-PRF-ENV-DETAILS for more information)

					Confirmed: Plan	Confirmed: Field
1.	Total Conditioned Floor Area	1,854 ft²	5.	Number of Floors Above Grade	1	
2.	Total Unconditioned Floor Area	692 ft²	6.	Number of Floors Below Grade	0	
3.	Addition Conditioned Floor Area	0 ft²				
4.	Addition Unconditioned Floor Area	0 ft²				

J. Opaque Surface & Orientation

	8. Total Gross Surface Area	9. Total Fenestration Area	10. Window to Wall Ratio
North Wall:	466 ft²	46 ft²	10.0%
East Wall	808 ft²	132 ft²	16.4%
South Wall	669 ft²	124 ft²	18.6%
West Wall	845 ft²	54 ft²	6.4%
Total:	2,788 ft²	357 ft²	12.8%
Roof	2,214 ft²	0 ft²	00.0%

CA Building Energy Efficiency Standards- 2016 Nonresidential Compliance — Report Version: NRCC-PRF-01-E-08082017-4377 — Report Generated at: 2017-10-02 08:21:55

Project Name:	Longfellow Elementary School - Building A	NRCC-PRF-01-E	Page 8 of 18
Project Address:	1101 S DWIGHT AVE, COMPTON 90220	Calculation Date/Time:	08:15, Mon, Oct 02, 2017
Compliance Scope:	Existing/Alteration	Input File Name:	2017-09-11 Longfellow ES BLDG. A - T-24.cbd16e

I. FENESTRATION ASSEMBLY SUMMARY — § 110.6 — Confirmed

1. Fenestration Assembly Name / Tag or ID.	2. Fenestration Type / Product Type / Frame Type	3. Certification Method*	4. Assembly Method	5. Area ft²	6. Overall U-factor	7. Overall SHGC	8. Vt	9. Shading	Plan	Field
Single Metal Clear	Vertical/Fenestration Exact/Window Metal/Framing	Default Performance	Slidebolt	474	1.19	0.81	0.77	X	☐	☐

* Stock installed manufacturer shall have a certified NFRC Label Certificate or use the CEC default values found in Table 110.6-A and Table 110.6-B. Center of Glass (COG) values are for the glass only, determined by the manufacturers, and not chosen for ease of installation. Use built fenestration values not calculated per Nonresidential Appendix NA6 and not used in this analysis.
** Stock: R= New, A = Altered, E = Existing

Tabing compliance credit for fenestration shading devices? (if "Yes", see NRCC-PRF-ENV-DETAILS for more information) — No

K. OPAQUE SURFACE ASSEMBLY SUMMARY — § 120.7/ § 140.3 — Confirmed

1. Surface Name	2. Surface Type	3. Area (ft²)	4. Framing Type	5. Cavity R-Value	6. Continuous R-Value	7. U-Factor / F-Factor / C-Factor	8. Shading	Plan	Field
R-19 Wall4	ExteriorWall	3756	Wood	13	NA	U-Factor: 0.122	X	☐	☐
R-19 Roof Cathedral10	Roof	2905	Wood	13	NA	U-Factor: 0.067	X	☐	☐
Slab On Grade12	UndergroundFloor	2905	NA	0	NA	F-Factor: 0.730	X	☐	☐
R-13 Wall41	InteriorWall	220	Wood	13	NA	U-Factor: 0.099	X	☐	☐

* Glazing: N= Storefront, A = Curtainwall, E = Entrance

L. ROOFING PRODUCT SUMMARY — § 140.3 — Confirmed

1. Product Type	2. Product Density (lb/ft³)	3. Aged Solar Reflectance	4. Thermal Emittance	5. SRI	6. Cool Roof Credit	7. Roofing Product Description	Plan	Field
R-13 Roof Cathedral10	4.45104	0.08	0.75	NA	No	NA	☐	☐

CA Building Energy Efficiency Standards- 2016 Nonresidential Compliance — Report Version: NRCC-PRF-01-E-08082017-4377 — Report Generated at: 2017-10-02 08:21:55

Project Name:	Longfellow Elementary School - Building A	NRCC-PRF-01-E	Page 9 of 18
Project Address:	1101 S DWIGHT AVE, COMPTON 90220	Calculation Date/Time:	08:15, Mon, Oct 02, 2017
Compliance Scope:	Existing/Alteration	Input File Name:	2017-09-11 Longfellow ES BLDG. A - T-24.cbd16e

M. HVAC SYSTEM SUMMARY (see NRCC-PRF-MCH-DETAILS for more information) — § 110.1 / § 110.2

Any System Equipment * Plan & Economizer* Info Included Below In Table H1 — Confirmed: Plan ☐ Field ☐

1. Equip Name	2. Equip Type	3. System Type (Simple * or Complex *)	4. Qty	5. Total Heating Output (kBtu/h)	6. Supp Heat Source (Y/N)	7. Total Cooling Output (kBtu/h)	8. Efficiency		9. Economizer	10. Acceptance Testing Required? (Y/N) *	11. Fault Detect	
							Cooling	Heating				
Building A.	S2AC (Split)Psheat	Simple	1	74	No	0	57	SEER:14.0 / EER:12.0	AFUE:81.0	Yes	N	☐ ☐

* Any System Equipment including furnaces, air handling units, heat pumps, etc.
** Simple System must complete NRCC-ECN-03-E prior to passing design review form
*** Complex System must complete NRCC-ECM-09-E and corresponding design review form
**** Economizer, of which acceptance tests are required per is provided in NRCC-PRF-MCH-DETAILS

Discrepancy between modeled and designed equipment sizing? (if "Yes", see Table R "Additional Remarks" for an explanation) — No

Mot System Equipment Serves Dues Not Apply

N. ECONOMIZER & FAN SYSTEMS SUMMARY* — § 140.4 — Confirmed

1. Equip Name	2. Supply Fan: Outside Air CFM	2. Supply Fan: CFM	2. Supply Fan: HP	2. Supply Fan: BHP	2. Supply Fan: TSP (Inch WC)	2. Supply Fan: Control	3. Return Fan: CFM	3. Return Fan: HP	3. Return Fan: BHP	3. Return Fan: TSP (Inch WC)	3. Return Fan: Control	4. Economizer Type (if present)	Plan	Field
Building A.	278	2065	0.93	0.878	1.81	ConstantVolume	NA	NA	NA	NA	NA	ItsEconomizer	☐	☐

* Mechanical ventilation calculations and exhaust fans are included in the NRCC-PRF-MCH-DETAILS section

CA Building Energy Efficiency Standards- 2016 Nonresidential Compliance — Report Version: NRCC-PRF-01-E-08082017-4377 — Report Generated at: 2017-10-02 08:21:55

Project Name:	Longfellow Elementary School - Building A	NRCC-PRF-01-E	Page 10 of 18
Project Address:	1101 S DWIGHT AVE, COMPTON 90220	Calculation Date/Time:	08:15, Mon, Oct 02, 2017
Compliance Scope:	Existing/Alteration	Input File Name:	2017-09-11 Longfellow ES BLDG. A - T-24.cbd16e

O. EQUIPMENT CONTROLS — § 120.2 — Confirmed

1. Equip Name	2. Equip Type	3. Controls	Plan	Field
Building A	S2AC	No DCV Controls No Economizer No Supply Air Temp. Control No Optimum Start No Evaporative Cooler	☐	☐

P. SYSTEM DISTRIBUTION SUMMARY — § 120.4/ § 140.4(l)

Dry System Distribution						Confirmed	
1. Equip Name	2. Equip Type	3. Duct Leakage and Sealing Required per 140.4(l)	4. Duct Leakage will be verified per NA5 and NA2	5. Ducts: Insulation R-Value	5. Ducts: Location	Plan	Field
Building A	S2AC	No	No	0	Unconditioned	☐	☐

Does the Project Include Zonal Systems? (if "Yes", see NRCC-PRF-MCH-DETAILS for system information)	No
Does the Project Include a Solar Ready Buildings? (if "Yes", see NRCC-PRF-MCH-DETAILS for system information)	No
Multifamily or Hotel/ Motel Occupancy? (if "Yes", see NRCC-PRF-MCH-DETAILS for DHW system information)	No

Q. INDOOR CONDITIONED LIGHTING GENERAL INFO (see NRCC-PRF-LTI-DETAILS for more info) — § 140.6 — Confirmed

1. Occupancy Type * *	2. Conditioned Floor Area ft² (ft²)	3. Installed Lighting Power (Watts)	4. Lighting Control Credits: (Watts).	5. Additional (Custom) Allowance		Plan	Field
				Area Category Footprints (Watts)	Tailored Method (Watts).		
Building Totals:		0	0	0	0	☐	☐

* See Table 140.6-C
** See ACM 2016 Exp. unconditioned spaces.
*Lighting information for existing spaces modeled is not included in the table
**Multiple entries for an Occupancy Type may be listed in the table as there have been approved for Building Tareas that have the same floor multiplier.

CA Building Energy Efficiency Standards- 2016 Nonresidential Compliance — Report Version: NRCC-PRF-01-E-08082017-4377 — Report Generated at: 2017-10-02 08:21:55

Project Name:	Longfellow Elementary School - Building A	NRCC-PRF-01-E	Page 11 of 18
Project Address:	1101 S DWIGHT AVE, COMPTON 90220	Calculation Date/Time:	08:15, Mon, Oct 02, 2017
Compliance Scope:	Existing/Alteration	Input File Name:	2017-09-11 Longfellow ES BLDG. A - T-24.cbd16e

R. INDOOR CONDITIONED LIGHTING SCHEDULE (Adapted from NRCC-LTI-01-E)* — § 130.0

This Section Does Not Apply

*If lighting power duration were used in the compliance model (lighting dependently) will need to check prescriptive items for controls behavior details.

S1. COVERED PROCESS SUMMARY – ENCLOSED PARKING GARAGES — § 140.9

This Section Does Not Apply

S2. COVERED PROCESS SUMMARY – COMMERCIAL KITCHENS — § 140.9

This Section Does Not Apply

S3. COVERED PROCESS SUMMARY – COMPUTER ROOMS — § 140.9

This Section Does Not Apply

S4. COVERED PROCESS SUMMARY – LABORATORY EXHAUSTS — § 140.9

This Section Does Not Apply

T. UNMET LOAD HOURS

This Section Does Not Apply

U. ENERGY USE SUMMARY

Energy Component	Standard Design Site (kWh/y)	Proposed Design Site (kWh/y)	Margin (kWh/y)	Standard Design Site (kBtu)	Proposed Design Site (kBtu)	Margin (kBtu)
Space Heating	--	--	--	2.1	3.2	-1.1
Space Cooling	3.2	4.2	-0.0	--	--	--
Indoor Fans	12.5	5.3	7.2	--	--	--
Heat Rejection	--	--	--	--	--	--
Pumps & Misc.	--	--	--	--	--	--
Domestic Hot Water	--	--	--	8.6	8.6	0.0
Indoor Lighting	9.1	9.1	0.0	--	--	--
COMPLIANCE TOTAL	**18.9**	**12.6**	**6.2**	**10.7**	**11.8**	**-1.1**
Receptacle	7.9	7.9	0.0	--	--	--

CA Building Energy Efficiency Standards- 2016 Nonresidential Compliance — Report Version: NRCC-PRF-01-E-08082017-4377 — Report Generated at: 2017-10-02 08:21:55

Project Name:	Longfellow Elementary School - Building A	NRCC-PRF-01-E	Page 12 of 18
Project Address:	1101 S DWIGHT AVE, COMPTON 90220	Calculation Date/Time:	08:15, Mon, Oct 02, 2017
Compliance Scope:	Existing/Alteration	Input File Name:	2017-09-11 Longfellow ES BLDG. A - T-24.cbd16e

U. ENERGY USE SUMMARY

Energy Component	Standard Design Site (kWh/y)	Proposed Design Site (kWh/y)	Margin (kWh/y)	Standard Design Site (kBtu)	Proposed Design Site (kBtu)	Margin (kBtu)
Process	--	--	--	--	--	--
Other Ltg.	--	--	--	--	--	--
TOTAL	**36.7**	**29.5**	**6.2**	**10.7**	**11.8**	**-1.1**

CA Building Energy Efficiency Standards- 2016 Nonresidential Compliance — Report Version: NRCC-PRF-01-E-08082017-4377 — Report Generated at: 2017-10-02 08:21:55

Project Name:	Longfellow Elementary School - Building A	NRCC-PRF-01-E	Page 13 of 18
Project Address:	1101 S DWIGHT AVE, COMPTON 90220	Calculation Date/Time:	08:15, Mon, Oct 02, 2017
Compliance Scope:	Existing/Alteration	Input File Name:	2017-09-11 Longfellow ES BLDG. A - T-24.cbd16e

DOCUMENTATION AUTHOR'S DECLARATION STATEMENT — § 10-103

I certify that this Certificate of Compliance documentation is accurate and complete.

Documentation Author Name: Jinkal Patel	
Company: Optimum Energy Design	Signature:
Address: 5200 East La Palma Avenue	Signature Date: 10/02/2017
City/State/Zip: Anaheim California 92807	CEA Identification (if applicable):
Phone: (714)939-2277	

RESPONSIBLE PERSON'S DECLARATION STATEMENT

I certify via following under penalty of perjury, under the laws of the State of California:

1	I hereby affirm that I am eligible under the provisions of Division 3 of the Business and Professions Code to sign this document as the person responsible for its preparation; and that I am licensed in the State of California as a civil engineer, mechanical engineer, electrical engineer, or I am a licensed architect.
2	I affirm that I am eligible under the provisions of Division 3 of the Business and Professions Code by section 5537.2 or 6737.3 to sign this document as the person responsible for its preparation; and that I am a licensed contractor performing this work.
3	I affirm that I am eligible under Division 3 of the Business and Professions Code to sign this document because it pertains to a structure or type of work described as exempt pursuant to Business and Professions Code Section 5537, 5538 and 6737.1.

Responsible Envelope Designer Name:	Signature:
Company: Optimum Energy Design	Date Signed:
Address: 5200 East La Palma Avenue	Declaration Statement Type:
City/State/Zip: Anaheim California 92807	Title: License #:
Phone: (714) 939-2277	
Responsible Lighting Designer Name:	Signature: NOT IN SCOPE
Company:	Date Signed:
Address:	Declaration Statement Type:
City/State/Zip:	Title: License #:
Phone:	
Responsible Mechanical Designer Name: Abby Banerjee	Signature:
Company: Optimum Energy Design	Date Signed: 10/02/2017
Address: 5200 East La Palma Avenue	Declaration Statement Type:
City/State/Zip: Anaheim California 92807	Title: License #: M29253
Phone: (714) 693-2277	

CA Building Energy Efficiency Standards- 2016 Nonresidential Compliance — Report Version: NRCC-PRF-01-E-08082017-4377 — Report Generated at: 2017-10-02 08:21:55

Project Name:	Longfellow Elementary School - Building A	NRCC-PRF-01-E	Page 14 of 18
Project Address:	1101 S DWIGHT AVE, COMPTON 90220	Calculation Date/Time:	08:15, Mon, Oct 02, 2017
Compliance Scope:	Existing/Alteration	Input File Name:	2017-09-11 Longfellow ES BLDG. A - T-24.cbd16e

NRCC-PRF-ENV-DETAILS -SECTION START-

A. OPAQUE SURFACE ASSEMBLY DETAILS — Confirmed: Plan ☐ Field ☐

1. Surface Name	2. Surface Type	3. Description of Assembly Layers	4. Notes
R-13 Wall4	ExteriorWall	Stucco - 7/8 in. Vapor permeable felt - 1 ft in. Wood framed wall, 16in. OC, 3.5in., R-13 Gypsum Board - 1/2 in.	☐ ☐
R-19 Roof Cathedral10	Roof	Asphalt Shingles - 1/4 in Vapor permeable felt - 1/8 in. Plywood - 3/4 in. Air – Cavity – Wall Roof Ceiling - 4 in. or more Wood framed roof, 16in. OC, 5.5in., R-19 Gypsum Board - 1/2 in.	☐ ☐
Slab On Grade12	UndergroundFloor	Slab Type = Unheated/Slab/Grade Insulation Orientation = None Insulation R-Value = 00	☐ ☐
R-13 Wall41	InteriorWall	Stucco - 7/8 in. Vapor permeable felt - 1/8 in. Wood framed wall, 16in. OC, 3.5in., R-13 Gypsum Board - 1/2 in.	☐ ☐

B. OVERHANG DETAILS (Adapted from NRCC-ENV-02-E)

This Section Does Not Apply

C. OPAQUE DOOR SUMMARY

This Section Does Not Apply

CA Building Energy Efficiency Standards- 2016 Nonresidential Compliance — Report Version: NRCC-PRF-01-E-08082017-4377 — Report Generated at: 2017-10-02 08:21:55

Project Name:	Longfellow Elementary School - Building A	NRCC-PRF-01-E	Page 15 of 18
Project Address:	1101 S DWIGHT AVE, COMPTON 90220	Calculation Date/Time:	08:15, Mon, Oct 02, 2017
Compliance Scope:	Existing/Alteration	Input File Name:	2017-09-11 Longfellow ES BLDG. A - T-24.cbd16e

NRCC-PRF-MCH-DETAILS -SECTION START-

A. MECHANICAL VENTILATION AND REHEAT (Adapted from 2016-NRCC-MCH-03-E) — Confirmed: Plan ☐ Field ☐

1. CONDITIONED ZONE NAME	2. VENTILATION ID	3. VENTILATION (cfm)	4. HEATING SYSTEM ID	5. COOLING SYSTEM ID	6. HEATING SYSTEM TYPE	7. HEATING SYSTEM FUEL	8. COOLING SYSTEM TYPE	9. HEATING SYSTEM CAPACITY (kBtu/h)	10. COOLING SYSTEM CAPACITY (kBtu/h)	11. MINIMUM SUPPLY AIR TEMPERATURE (°F)	12. SUPPLY AIR TEMPERATURE RESET	13. MAXIMUM SUPPLY AIR FLOW RATE (cfm)	14. MINIMUM SUPPLY AIR FLOW RATE (cfm)	15. HEATING SYSTEM CONTROL TYPE	16. COOLING SYSTEM CONTROL TYPE	17. MINIMUM EFFICIENCY (HSPF)	18. MINIMUM EFFICIENCY (SEER)	19. ECONOMIZER (Y/N)	20. ECONOMIZER HIGH LIMIT SHUTOFF	Plan	Field
1-Offices	Building A	2,045	NA	NA	NA	NA	NA	N	Building A	1,854	NA	9	10.0	278	278	NA	N	NA	☐	☐
									TOTAL	2,548		NA		NA	NA	NA			☐	☐

B. ZONAL SYSTEM AND TERMINAL UNIT SUMMARY — § 140.4 — Confirmed

1. System ID	2. System Type	3. Qty	4. Rated Capacity (kBtuh) Heating	4. Rated Capacity (kBtuh) Cooling	5. Economizer	6. Zone Name	7. Airflow (cfm) Design	7. Airflow (cfm) Min.	7. Airflow (cfm) Min. Ratio	8. Fan BHP	8. Fan Cycles	8. Fan ECM Motor	Plan	Field
1-Offices-Trm	Uncontrolled	1	NA	NA	NA	1-Offices	2045	NA	NA	NA	NA	☐	☐	☐

C. EXHAUST FAN SUMMARY

This Section Does Not Apply

D. DHW EQUIPMENT SUMMARY – (Adapted from NRCC-PLB-01)

This Section Does Not Apply

E. MULTI-FAMILY CENTRAL DHW SYSTEM DETAILS

This Section Does Not Apply

CA Building Energy Efficiency Standards- 2016 Nonresidential Compliance — Report Version: NRCC-PRF-01-E-08082017-4377 — Report Generated at: 2017-10-02 08:21:55

Project Name:	Longfellow Elementary School - Building A	NRCC-PRF-01-E	Page 16 of 18
Project Address:	1101 S DWIGHT AVE, COMPTON 90220	Calculation Date/Time:	08:15, Mon, Oct 02, 2017
Compliance Scope:	Existing/Alteration	Input File Name:	2017-09-11 Longfellow ES BLDG. A - T-24.cbd16e

F. SOLAR HOT WATER HEATING SUMMARY (Adapted from NRCC-STH-01)

This Section Does Not Apply

G. MECHANICAL HVAC ACCEPTANCE TESTS & FORMS (Adapted from 2016-NRCC-MCH-01-E) — § RA4

Declaration of Required Acceptance Certificates (NRCA) – Acceptance Certificates that may be submitted. Retain copies and verify forms are completed and signed to post in field for field inspector to verify.

Test Description	MCH-03A	MCH-04A	MCH-05A	MCH-06A	MCH-07A	MCH-08A	MCH-09A	MCH-10A	MCH-11A	MCH-12A	MCH-13A	MCH-14A	MCH-15A	MCH-16A	MCH-17A	MCH-18A	MCH-19A	Confirmed: Plan	Confirmed: Field
Equipment Requiring Testing or Verification	# of Units	Constant Volume Single Zone HVAC	Duct Leakage	Air Side Test	Economizer Controls	DCV	Supply Fan VFD	Valve Leakage	Supply Water Temp Reset Controls	Hydronic System Variable Flow Controls	Auto Demand Shed Controls	PDX or DX Units	Air Cooled Condenser Fans	Evaporative Condenser Controls	Variable Speed Compressor Controls	TES Systems	Thermal Energy Storage		
NonBoxBrnz SrtWSystems	1	--	--	--	--	--	--	--	--	--	--	--	--	--	--	--	--	☐	☐
Building A	1	X	X	--	--	--	--	--	--	--	--	--	--	--	--	--	--	☐	☐

H. EVAPORATIVE COOLER SUMMARY

This Section Does Not Apply

NRCC-PRF-LTI-DETAILS -SECTION START-

A. INDOOR CONDITIONED LIGHTING CONTROL CREDITS (Adapted from NRCC-LTI-02-E) — § 140.6

This Section Does Not

Project Name:	Longfellow Elementary School - Building C	NRCC-PRF-01-E	Page 1 of 19
Project Address:	1101 S DWIGHT AVE. COMPTON 90220	Calculation Date/Time:	11:41, Fri, Sep 29, 2017
Compliance Scope:	Existing/Alteration	Input File Name:	2017-09-28 Longfellow ES BLDG. C - T-24.cbd16x

A. PROJECT GENERAL INFORMATION

1.	Project Location (City)	COMPTON	8.	Standards Version	Compliance2016
2.	CK-Zip Code	90220	9.	Compliance Software (version)	EnergyPro 7.1
3.	Climate Zone	9	10.	Weather File	HYBRIDTMYNSC-NORTHROP-HLD_722956_CZ2010.epw
4.	Total Conditioned Floor Area In Scope:	5,484 ft²	11.	Building Orientation (deg)	(N) 0 deg
5.	Total Unconditioned Floor Area:	486 ft²	12.	Permitted Scope of Work:	Existing/Alteration:
6.	Total # of Stories (Habitable Above Grade)	1	13	Building Type(s)	Nonresidential
7.	Total # of dwelling units	0	14.	Zon Type	Relocatable

B. COMPLIANCE RESULTS FOR PERFORMANCE COMPONENTS (Annual TDV Energy Use, kBtu/ft²-yr) — § 140.1

BUILDING COMPLIES

1. Energy Component	2. Standard Design (TDV)	3. Proposed Design (TDV)	4. Compliance Margin (TDV)	5. Percent Better than Standard
Space Heating:	3.41	3.07	+0.34	+134.7%
Space Cooling:	79.20	72.09	7.10	9.0%
Indoor Fans	97.16	43.26	53.92	53.6%
Heat Rejection	--	--	--	--
Pumps & Misc.:	--	--	--	--
Domestic Hot Water:	10.44	10.44	--	0.0%
Indoor Lighting:	59.00	59.00	--	0.0%
COMPLIANCE TOTAL:	250.31	195.59	54.82	21.9%
Receptacle:	65.70	65.70	0.0	0.0%
Process	--	--	--	--
Other Ltg:	--	--	--	--
TOTAL	316.01	261.29	54.8	17.3%

CA Building Energy Efficiency Standards- 2016 Nonresidential Compliance — Report Version: NRCC-PRF-01-E-08082017-4377 — Report Generated at: 2017-09-29 11:47:06

Project Name:	Longfellow Elementary School - Building C	NRCC-PRF-01-E	Page 2 of 19
Project Address:	1101 S DWIGHT AVE. COMPTON 90220	Calculation Date/Time:	11:41, Fri, Sep 29, 2017
Compliance Scope:	Existing/Alteration	Input File Name:	2017-09-28 Longfellow ES BLDG. C - T-24.cbd16x

C. PRIORITY FLAN CHECK/ INSPECTION ITEMS (In order of highest to lowest TDV energy savings)

1st	Indoor Fans: Check envelope and mechanical
2nd	Space Cooling: Check envelope and mechanical
3rd	Heat Rejection: Check envelope and mechanical
4th	Pumps & Misc.: Check mechanical
5th	Domestic Hot Water: Check mechanical
6th	Indoor Lighting: Check lighting
7th	Space Heating: Check envelope and mechanical

Compliance Margin by Energy Component (from Table B of Column A)

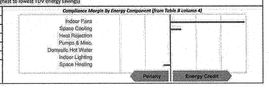

D. EXCEPTIONAL CONDITIONS

The building does not include service water heating. Verify that service water heating is not required and is not included in the design.

E. HERS VERIFICATION

This Section Does Not Apply

F. ADDITIONAL REMARKS

None Provided

CA Building Energy Efficiency Standards- 2016 Nonresidential Compliance — Report Version: NRCC-PRF-01-E-08082017-4377 — Report Generated at: 2017-09-29 11:47:06

Project Name:	Longfellow Elementary School - Building C	NRCC-PRF-01-E	Page 3 of 19
Project Address:	1101 S DWIGHT AVE. COMPTON 90220	Calculation Date/Time:	11:41, Fri, Sep 29, 2017
Compliance Scope:	Existing/Alteration	Input File Name:	2017-09-28 Longfellow ES BLDG. C - T-24.cbd16x

G. COMPLIANCE PATH & CERTIFICATE OF COMPLIANCE SUMMARY

Identify which building components use the performance or prescriptive path for compliance. "NA" is not in project.
For components that utilize the performance path, indicate the short number that includes mandatory measures on plans.

Building Component	Compliance Path	Compliance Forms (required for submittal)	Location of Mandatory Notes on Plans
Envelope	☐ Performance	NRCC-PRF-ENV-DETAILS (section of the NRCC-PRF-01-E)	
	☐ Prescriptive	NRCC-ENV-01 / 02 / 03 / 04 / 05 / 06-E	
	☒ NA		
Mechanical	☒ Performance	NRCC-PRF-MCH-DETAILS (section of the NRCC-PRF-01-E)	
	☐ Prescriptive	NRCC-MCH-01 / 02 / 03 / 04 / 05 / 06 / 07-E	
	☐ NA		
Domestic Hot Water	☐ Performance	NRCC-PRF-PLB-DETAILS (section of the NRCC-PRF-01-E)	
	☐ Prescriptive	NRCC-PLB-01-E	
	☒ NA		
Lighting (Indoor Conditioned)	☐ Performance	NRCC-PRF-LTI-DETAILS (section of the NRCC-PRF-01-E)	
	☐ Prescriptive	NRCC-LTI-01 / 02 / 03 / 04 / 05 / 06-E	
	☒ NA		
Covered Process: Commercial Kitchens	☐ Performance	13 (section of the NRCC-PRF-01-E)	
	☐ Prescriptive	NRCC-PRC-01 / 02-E	
	☒ NA		
Covered Process: Computer Rooms	☐ Performance	13 (section of the NRCC-PRF-01-E)	
	☐ Prescriptive	NRCC-PRC-01-E	
	☒ NA		
Covered Process: Laboratory Exhaust	☐ Performance	14 (section of the NRCC-PRF-01-E)	
	☐ Prescriptive	NRCC-PRC-02 / 03-E	
	☒ NA		

CA Building Energy Efficiency Standards- 2016 Nonresidential Compliance — Report Version: NRCC-PRF-01-E-08082017-4377 — Report Generated at: 2017-09-29 11:47:06

Project Name:	Longfellow Elementary School - Building C	NRCC-PRF-01-E	Page 4 of 19
Project Address:	1101 S DWIGHT AVE. COMPTON 90220	Calculation Date/Time:	11:41, Fri, Sep 29, 2017
Compliance Scope:	Existing/Alteration	Input File Name:	2017-09-28 Longfellow ES BLDG. C - T-24.cbd16x

G. COMPLIANCE PATH & CERTIFICATE OF COMPLIANCE SUMMARY

The following building components are only eligible for prescriptive compliance. Indicate which are relevant to the project. — *The following building components may have mandatory requirements per Para 6, indicate which are relevant to the project.*

Yes	NA	Prescriptive Requirement	Compliance Forms	Yes	NA	Mandatory Requirement	Compliance Forms
☒	☐	Lighting (Indoor Unconditioned) §146.0	NRCC-LTI-01 / 02 / 03 / 04 / 05-E	☐	☒	Commissioning: §110.8: Simple Systems: Complex Systems:	NRCC-CXR-01 / 02 / 03 / 05-E NRCC-CXR-01 / 02 / 04 / 05-E
☐	☒	Lighting (Outdoor) §146.0	NRCC-LTO-01 / 02 / 03-E	☐	☒	Electrical: §130.5	NRCC-ELC-01-E
☐	☒	Lighting (Sign) §146.0	NRCC-LTI-05-E	☐	☒	Solar Ready: §110.10	NRCC-SRA-01 / 02-E
☐	☒	Solar Thermal Water Heating: §146.5.	NRCC-LTI-01-E	☐	☒	Covered Process: §120.6 Parking Garage:	NRCC-PRC-01-E NRCC-PRC-02/03-E
				☐	☒	Commercial Refrigeration:	NRCC-PRC-04-E
				☐	☒	Warehouse Refrigeration	NRCC-PRC-05/07/08-E
				☐	☒	Compressed Air	NRCC-PRC-06-E
				☐	☒	Process Boilers:	NRCC-PRC-12-E

CA Building Energy Efficiency Standards- 2016 Nonresidential Compliance — Report Version: NRCC-PRF-01-E-08082017-4377 — Report Generated at: 2017-09-29 11:47:06

Project Name:	Longfellow Elementary School - Building C	NRCC-PRF-01-E	Page 5 of 19
Project Address:	1101 S DWIGHT AVE. COMPTON 90220	Calculation Date/Time:	11:41, Fri, Sep 29, 2017
Compliance Scope:	Existing/Alteration	Input File Name:	2017-09-28 Longfellow ES BLDG. C - T-24.cbd16x

H. CERTIFICATE OF INSTALLATION, CERTIFICATE OF ACCEPTANCE & CERTIFICATE OF VERIFICATION SUMMARY (NRCI/NRCA/NRCV) –
Documentation Author to indicate which Certificates must be submitted for the features to be recognized for compliance.
(Retain copies and verify forms are completed and signed to post in field for Field Inspector to verify).
See Tables G, and H. in MCH and ETI Details Sections for Acceptance Tests and forms by equipment.

Building Component	Compliance Forms (required for submittal)	Confirmed: Plans	Confirmed: Field
Envelope	☐ NRCI-ENV-01-E - For all buildings	☐	☐
	☐ NRCA-ENV-02-F - NFRC Label certification for fenestration	☐	☐
	☒ NRCA-ENV-03-E - For all buildings with Mechanical Systems	☐	☐
	☒ NRCA-MCH-02-A - Outdoor Air	☐	☐
	☐ NRCA-MCH-03-A – Constant Volume Single Zone HVAC.	☐	☐
	☐ NRCA-MCH-04-H - Air Distribution Duct Leakage	☐	☐
	☒ NRCA-MCH-04-B - Air Economizer Controls	☐	☐
	☐ NRCA-MCH-05-A - Demand Control Ventilation	☐	☐
	☒ NRCA-MCH-07-A – Supply Fan Variable Flow Controls	☐	☐
	☐ NRCA-MCH-08-A: Valve Leakage Test	☐	☐
	☐ NRCA-MCH-09-A – Supply Water Temp Reset Controls	☐	☐
	☐ NRCA-MCH-10-A: Hydronic System Variable Flow Controls	☐	☐
	☒ NRCA-MCH-11-A – Auto Demand Shed Controls	☐	☐
	☒ NRCA-MCH-12-A: Packaged Direct Expansion Units	☐	☐
	☐ NRCA-MCH-13-A: Air Handling Units and Zone Terminal Units	☐	☐
	☐ NRCA-MCH-14-A: Distributed Energy Storage	☐	☐
	☐ NRCA-MCH-15-A – Thermal Energy Storage	☐	☐
	☒ NRCA-MCH-16-A- Supply Air Temp Reset Controls.	☐	☐
	☐ NRCA-MCH-17-A – Condensate Water Temp Reset Controls	☐	☐
	☐ NRCA-MCH-18-A: Energy Management Controls Systems	☐	☐
	☐ NRCV-MCH-04-H: Duct Leakage Test	☐	☐

CA Building Energy Efficiency Standards- 2016 Nonresidential Compliance — Report Version: NRCC-PRF-01-E-08082017-4377 — Report Generated at: 2017-09-29 11:47:06

Project Name:	Longfellow Elementary School - Building C	NRCC-PRF-01-E	Page 6 of 19
Project Address:	1101 S DWIGHT AVE. COMPTON 90220	Calculation Date/Time:	11:41, Fri, Sep 29, 2017
Compliance Scope:	Existing/Alteration	Input File Name:	2017-09-28 Longfellow ES BLDG. C - T-24.cbd16x

H. CERTIFICATE OF INSTALLATION, CERTIFICATE OF ACCEPTANCE & CERTIFICATE OF VERIFICATION SUMMARY (NRCI/NRCA/NRCV) –
Documentation Author to indicate which Certificates must be submitted for the features to be recognized for compliance.
(Retain copies and verify forms are completed and signed to post in field for Field Inspector to verify).
See Tables G, and H. in MCH and ETI Details Sections for Acceptance Tests and forms by equipment.

Building Component	Compliance Forms (required for submittal)	Confirmed: Plans	Confirmed: Field
Plumbing	☐ NRCA-PRC-01-E- Refrigerated Warehouse	☐	☐
	☐ NRCA-PRC-03-F- Compressed Air Systems	☐	☐
	☐ NRCA-PRC-03-A- Kitchen Exhaust	☐	☐
	☐ NRCA-PRC-03-F- Garage Exhaust	☐	☐
	☐ NRCA-PRC-04-F- Refrigerated Warehouse- Evaporator Fan Motor Controls	☐	☐
	☐ NRCA-PRC-05-F- Refrigerated Warehouse- Evaporative Condenser Controls	☐	☐
	☐ NRCA-PRC-07- Refrigerated Warehouse- Air Cooled Condenser Controls	☐	☐
	☐ NRCA-PRC-07F- Refrigerated Warehouse- Variable Speed Compressor	☐	☐
	☐ NRCA-PRC-08-F- Electrical Resistance Underslab Heating System	☐	☐

CA Building Energy Efficiency Standards- 2016 Nonresidential Compliance — Report Version: NRCC-PRF-01-E-08082017-4377 — Report Generated at: 2017-09-29 11:47:06

Project Name:	Longfellow Elementary School - Building C	NRCC-PRF-01-E	Page 7 of 19
Project Address:	1101 S DWIGHT AVE. COMPTON 90220	Calculation Date/Time:	11:41, Fri, Sep 29, 2017
Compliance Scope:	Existing/Alteration	Input File Name:	2017-09-28 Longfellow ES BLDG. C - T-24.cbd16x

I. ENVELOPE GENERAL INFORMATION (See NRCC-PRF-ENV-DETAILS for more information)

					Confirmed: Plans	Confirmed: Field
1.	Total Conditioned Floor Area	5,484 ft²	5.	Number of Floors Above Grade	1	
2.	Total Unconditioned Floor Area	486 ft²	6.	Number of Floors Below Grade	0	
3.	Addition Conditioned Floor Area	0 ft²				
4.	Addition Unconditioned Floor Area	0 ft²				

J. Opaque Surfaces & Orientation

	8. Total Gross Surface Area	9. Total Fenestration Area	10. Window to Wall Ratio	Confirmed: Plans	Confirmed: Field
North Wall:	2,268 ft²	468 ft²	20.6%	☐	☐
East Wall	696 ft²	0 ft²	00.0%	☐	☐
South Wall	2,268 ft²	0 ft²	00.0%	☐	☐
West Wall	0 ft²	0 ft²	00.0%	☐	☐
Total	5,232 ft²	468 ft²	08.9%	☐	☐
Roof	5,484 ft²	0 ft²	00.0%	☐	☐

CA Building Energy Efficiency Standards- 2016 Nonresidential Compliance — Report Version: NRCC-PRF-01-E-08082017-4377 — Report Generated at: 2017-09-29 11:47:06

Project Name:	Longfellow Elementary School - Building C	NRCC-PRF-01-E	Page 8 of 19
Project Address:	1101 S DWIGHT AVE. COMPTON 90220	Calculation Date/Time:	11:41, Fri, Sep 29, 2017
Compliance Scope:	Existing/Alteration	Input File Name:	2017-09-28 Longfellow ES BLDG. C - T-24.cbd16x

J. FENESTRATION ASSEMBLY SUMMARY — § 110.6 — Confirmed: Plans ☐ Field ☐

1. Fenestration Assembly Name / Tag or I.D.	2. Fenestration Type / Frame Type	3. Certification Method¹	4. Assembly Method	5. Area ft²	6. Overall U-factor	7. Overall SHGC	8. Overall VT	9. Shading	Plans	Field
Single Metal Clear	VerticalFenestration FixedWindow MetalFraming	Default Performance	Slidebolt	468	1.19	0.83	0.77	E	☐	☐

¹ Area-weighted fenestration shall have a certified NFRC Label Certificate (IGU and VT) or use the QAI default table found in Table 110.6-A or Table 110.6-B. Energy-Id Glass (EIDG) values are for the glass only, determined by the manufacturer, but are shown for ease of comparison. Low-Solar fenestration values was estimated per Nonresidential Appendix NA6 and are used in the analysis.
² Glazing Fr. - Area, A – Atrium, E – Existing

Taking compliance credit for fenestration shading devices? (If "Yes", see NRCC-PRF-ENV-DETAILS for more information) — No

K. OPAQUE SURFACE ASSEMBLY SUMMARY — § 120.7/ § 140.3 — Confirmed: Plans ☐ Field ☐

1. Surface Name	2. Surface Type	Area (ft²)	3. Framing Type	4. Cavity R-Value	5. Continuous R-Value	6. U-Factor / F-Factor / C-Factor	R, Insulation	Plans	Field
R-13 Wall4	Exterior Wall	4669	Wood	13	NA	U-Factor: 0.114	E	☐	☐
R-13 Roof Cathedral10	Roof	6372	Wood	13	NA	U-Factor: 0.067	E	☐	☐
Slab On Grade12	Underground Floor	6372.	NA	0	NA	F-Factor: 0.730	E	☐	☐

¹ Same as -H - Area, A – Atrium, E – Existing

L. ROOFING PRODUCT SUMMARY — § 140.3 — Confirmed: Plans ☐ Field ☐

1. Product Type	2. Product Density (lb/ft³)	3. Aged Solar Reflectance	4. Thermal Emittance	5. SRI	6. Cool Roof Credit	7. Roofing Product Description	Plans	Field
R-13 Roof Cathedral10	4.35104	0.08	0.75	NA	No	NA	☐	☐

CA Building Energy Efficiency Standards- 2016 Nonresidential Compliance — Report Version: NRCC-PRF-01-E-08082017-4377 — Report Generated at: 2017-09-29 11:47:06

Project Name:	Longfellow Elementary School - Building C	NRCC-PRF-01-E	Page 9 of 19
Project Address:	1101 S DWIGHT AVE. COMPTON 90220	Calculation Date/Time:	11:41, Fri, Sep 29, 2017
Compliance Scope:	Existing/Alteration	Input File Name:	2017-09-28 Longfellow ES BLDG. C - T-24.cbd16x

M. HVAC SYSTEM SUMMARY (see NRCC-PRF-MCH-DETAILS for more information) — § 110.1 / § 110.2 — Confirmed: Plans ☐ Field ☐

Dry System Equipment * (Fan & Economizer info included below in Table N)

1. Equip Name	2. Equip Type	3. System Type (Simple / or Complex ²)	4. Qty	5. Total Heating Output (kBtu/h)	6. Supp Heat Source (Y/N)	7. Total Cooling Output (kBtu/h)	8. Efficiency: Cooling	Efficiency: Heating	10. Acceptance Testing Required? (Y/N) +	11. Zonal Heating	Zonal Cooling
Building C	PUSV (PackagedVVTMini)	Complex	1	142	No	0	242	EER-10.9	AFUE-81.0	Yes	N	☐	☐

¹ Dry System Equipment includes furnaces, air handling units, heat pumps, etc.
² Simple Systems must complete NRCC-MCH-08-E if economizer/energy design criteria forms
³ Complex Systems must complete NRCC-MCH-08-E if economizer/energy design criteria forms
+ Testing is required for all equipment that is not exempt or applicable in previous NRCC-PRF-MCH-DETAILS
* Notes: H - Hydronic, A – Advanced, E – Existing

Mid System Equipment Section Does Not Apply

Discrepancy between modelled and designed equipment sizing? (If "Yes", see Table F "Additional Remarks" for an explanation) — No

N. ECONOMIZER & FAN SYSTEMS SUMMARY¹ — § 140.4 — Confirmed: Plans ☐ Field ☐

1. Equip Name	2. Outside Air	3. Supply Fan					4. Return Fan					5. Economizer Type (if present)	Plans	Field
		CFM	CFM	HP	BHP	TSP (Inch WC)	Control	CFM	HP	BHP	TSP (Inch WC)	Control			
Building C	2057	7500	8,850	0.830	6.09	VariableSpeedDrive		NA	NA	NA	NA	NA	FixedDrybulb	☐	☐

¹ Mechanical ventilation calculations and exhaust fans are factored in the NRCC-PRF-MCH-DETAILS section

CA Building Energy Efficiency Standards- 2016 Nonresidential Compliance — Report Version: NRCC-PRF-01-E-08082017-4377 — Report Generated at: 2017-09-29 11:47:06

Project Name:	Longfellow Elementary School - Building C	NRCC-PRF-01-E	Page 10 of 19
Project Address:	1101 S DWIGHT AVE. COMPTON 90220	Calculation Date/Time:	11:41, Fri, Sep 29, 2017
Compliance Scope:	Existing/Alteration	Input File Name:	2017-09-28 Longfellow ES BLDG. C - T-24.cbd16x

O. EQUIPMENT CONTROLS — § 110.2 — Confirmed: Plans ☐ Field ☐

1. Equip Name	2. Equip Type	3. Controls	Plans	Field
Building C	PUSV	No DCV Controls, DCV Controls Field Drybulb Economizer Warmest Zone Supply Air Temp. Reset Optimum Start No Evaporative Cooler	☐	☐

P. SYSTEM DISTRIBUTION SUMMARY — § 120.4/ § 140.4(j)

		Dry System Distribution				Confirmed	
1. Equip Name	2. Equip Type	3. Duct Leakage and Sealing Required per 140.4(l)	4. Duct Leakage will be verified per NA1 and NA2	5. Ducts: Insulation R-Value	Location	Plans	Field
Building C	PUSV	No	No	0	Unconditioned	☐	☐

Does the Project include Zonal Systems? (If "Yes", see NRCC-PRF-MCH-DETAILS for system information)	No
Does the Project include a Solar Hot Water System? (If "Yes", see NRCC-PRF-MCH-DETAILS for system information)	No
Multifamily or Hotel/ Motel Occupancy? (If "Yes", see NRCC-PRF-MCH-DETAILS for DHW system information)	No

Q. INDOOR CONDITIONED LIGHTING GENERAL INFO (see NRCC-PRF-LTI-DETAILS for more info)² — § 140.6 — Confirmed: Plans ☐ Field ☐

1. Occupancy Type ¹*	2. Conditioned Floor Area ² (ft²)	3. Installed Lighting Power (Watts)	4. Lighting Control Credits: (Watts)	5. Additional (Custom) Allowance: Area Category Footnotes (Watts)	Tailored Method (Watts)	Plans	Field
Building Totals:			0	9	9		

¹ See Table 140-C
² Non-NRCC-LTI-01-E plus unconditioned spaces.
* Lighting adjustments for multiple lighting controls installed is not included in the table
** Multiple activities for one Occupancy Type may be listed in the table but those have been aggregated for Building Totals that have floor area/floor multiplier.

CA Building Energy Efficiency Standards- 2016 Nonresidential Compliance — Report Version: NRCC-PRF-01-E-08082017-4377 — Report Generated at: 2017-09-29 11:47:06

Project Name:	Longfellow Elementary School - Building C	NRCC-PRF-01-E	Page 11 of 19
Project Address:	1101 S DWIGHT AVE. COMPTON 90220	Calculation Date/Time:	11:41, Fri, Sep 29, 2017
Compliance Scope:	Existing/Alteration	Input File Name:	2017-09-28 Longfellow ES BLDG. C - T-24.cbd16x

R. INDOOR CONDITIONED LIGHTING SCHEDULE (Adopted from NRCC-LTI-01-E)² — § 130.0

This Section Does Not Apply

²If lighting power densities were used in the compliance model, Building Departments will need to check/confirm them for Luminaire Schedule details.

S1. COVERED PROCESS SUMMARY – ENCLOSED PARKING GARAGES — § 140.9

This Section Does Not Apply

S2. COVERED PROCESS SUMMARY – COMMERCIAL KITCHENS — § 140.9

This Section Does Not Apply

S3. COVERED PROCESS SUMMARY – COMPUTER ROOMS — § 140.9

This Section Does Not Apply

S4. COVERED PROCESS SUMMARY – LABORATORY EXHAUSTS — § 140.9

This Section Does Not Apply

T. UNMET LOAD HOURS

Thermal Zone Name	Cooling Unmet Load Hour Limit for Thermal Zone	Proposed Cooling Unmet Load Hours	Heating Unmet Load Hour Limit for Thermal Zone	Proposed Heating Unmet Load Hours
1 (VAV 1-C) Classroom 103C	150	0	150	219.25
2 (VAV 2-C) Classroom 105C	150	0	150	219.25
3 (VAV 3-C) Classroom 112C	150	0	150	219.25
4 (VAV 3-C) Classroom 105C	150	0	150	285.25
5 (VAV 5-C) Classroom 113C	150	0	150	219.25
6 (VAV 6-C) Classroom 114C	150	0	150	285.25

U. ENERGY USE SUMMARY

Energy Component	Standard Design Site (kWh)	Proposed Design Site (kWh)	Margin (kWh)	Standard Design Site (MBtu)	Proposed Design Site (MBtu)	Margin (MBtu)
Space Heating:	--	--	--	11.1	27.3	-16.2
Space Cooling:	11.9	8.7	3.2	--	--	--

CA Building Energy Efficiency Standards- 2016 Nonresidential Compliance — Report Version: NRCC-PRF-01-E-08082017-4377 — Report Generated at: 2017-09-29 11:47:06

Project Name:	Longfellow Elementary School - Building C	NRCC-PRF-01-E	Page 12 of 19
Project Address:	1101 S DWIGHT AVE. COMPTON 90220	Calculation Date/Time:	11:41, Fri, Sep 29, 2017
Compliance Scope:	Existing/Alteration	Input File Name:	2017-09-28 Longfellow ES BLDG. C - T-24.cbd16x

U. ENERGY USE SUMMARY

Energy Component	Standard Design Site (kWh)	Proposed Design Site (kWh)	Margin (kWh)	Standard Design Site (MBtu)	Proposed Design Site (MBtu)	Margin (MBtu)
Indoor Fans	21.9	7.4	14.5	--	--	--
Heat Rejection	--	--	--	--	--	--
Pumps & Misc.	--	--	--	--	--	--
Domestic Hot Water	--	--	--	25.0	33.8	0.5
Indoor Lighting	13.5	13.5	0.0	--	--	--
COMPLIANCE TOTAL	47.2	29.6	17.7	55.9	67.1	-16.2
Receptacle	14.5	14.5	0.0	--	--	--
Process	--	--	--	--	--	--
Other Ltg	--	--	--	--	--	--
TOTAL	61.8	44.1	17.7	55.9	67.1	-16.2

CA Building Energy Efficiency Standards- 2016 Nonresidential Compliance — Report Version: NRCC-PRF-01-E-08082017-4377 — Report Generated at: 2017-09-29 11:47:06

Project Name:	Longfellow Elementary School - Building C	NRCC-PRF-01-E	Page 13 of 19
Project Address:	1101 S DWIGHT AVE. COMPTON 90220	Calculation Date/Time:	11:41, Fri, Sep 29, 2017
Compliance Scope:	Existing/Alteration	Input File Name:	2017-09-28 Longfellow ES BLDG. C - T-24.cbd16x

DOCUMENTATION AUTHOR'S DECLARATION STATEMENT — § 10-103

I certify that this Certificate of Compliance documentation is accurate and complete.

Documentation Author Name:	Zirbal Patel
Company:	Optimum Energy Design
Address:	5200 East La Palma Avenue
City/State/Zip:	Anaheim California 92807
Phone:	(714)693-2277
Signature:	
Signature Date:	10/02/2017
CEA Identification (if applicable):	

RESPONSIBLE PERSON'S DECLARATION STATEMENT

I certify the following under penalty of perjury, under the laws of the State of California:

1	I hereby affirm that I am eligible under the provisions of Division 3 of the Business and Professions Code to sign this document as the person responsible for its preparation; and that I am licensed in the State of California as a civil engineer, mechanical engineer, electrical engineer, or I am a licensed architect.
2	I affirm that I am eligible under the provisions of Division 3 of the Business and Professions Code by section 5537.2 or 6737.3 to sign this document as the person responsible for its preparation; and that I am a licensed contractor performing this work.
3	I affirm that I am eligible under Division 3 of the Business and Professions Code to sign this document because it pertains to a structure or type of work described as exempt pursuant to Business and Professions Code Sections 5537, 5538 and 6737.1.

Responsible Envelope Designer Name:	
Company:	Signature: NOT IN SCOPE
Address:	Date Signed:
City/State/Zip:	Declaration Statement Type:
Phone:	Title: License #:
Responsible Mechanical Designer Name:	Abby Banerjee
Company:	Optimum Energy Design
Address:	5200 East La Palma Avenue
City/State/Zip:	Anaheim California 92807
Phone:	(714) 693-2277
Signature:	
Date Signed:	10/02/2017
Declaration Statement Type:	
Title:	License #: M29253

CA Building Energy Efficiency Standards- 2016 Nonresidential Compliance — Report Version: NRCC-PRF-01-E-08082017-4377 — Report Generated at: 2017-09-29 11:47:06

Project Name:	Longfellow Elementary School - Building C	NRCC-PRF-01-E	Page 14 of 19
Project Address:	1101 S DWIGHT AVE. COMPTON 90220	Calculation Date/Time:	11:41, Fri, Sep 29, 2017
Compliance Scope:	Existing/Alteration	Input File Name:	2017-09-28 Longfellow ES BLDG. C - T-24.cbd16x

NRCC-PRF-ENV-DETAILS -SECTION START-

A. OPAQUE SURFACE ASSEMBLY DETAILS — Confirmed: Plans ☐ Field ☐

1. Surface Name	2. Surface Type	3. Description of Assembly Layers	4. Notes	Plans	Field
R-13 Wall4	ExteriorWall	Stucco - 7/8 in. Vapor permeable felt - 3/8 in. Wood framed wall, 16in. OC. 3.5in., R-13 Gypsum Board - 1/2 in.		☐	☐
R-13 Roof Cathedral10	Roof	Asphalt shingles - 1/4 in. Vapor permeable felt - 1/8 in. Plywood - 1/2 in. Air - Cavity - Wall Roof Ceiling - 4 in. or more Wood framed roof, 16in. OC. 3.5in., R-13 Gypsum Board - 1/2 in.		☐	☐
Slab On Grade12	UndergroundFloor	Slab Type = UnheatedSlabOnGrade Insulation Orientation = None Insulation R-Value = 00.		☐	☐

B. OVERHANG DETAILS (Adapted from NRCC-ENV-03-E)

This Section Does Not Apply

C. OPAQUE DOOR SUMMARY — Confirmed: Plans ☐ Field ☐

1. Opaque Door Assembly Name / Tag or I.D.	2. Door Type	3. Certification Method	4. Operation	5. Area	6. Overall U-factor	7. Status¹	Plans	Field
Wood Door7	WoodSkinnerThanOrEqualTo1.75inThickdoor	DefaultPerformance	Swinging	126	0.500	E	☐	☐

¹ Status: N - New, A – Altered, E – Existing

CA Building Energy Efficiency Standards- 2016 Nonresidential Compliance — Report Version: NRCC-PRF-01-E-08082017-4377 — Report Generated at: 2017-09-29 11:47:06

Project Name:	Longfellow Elementary School - Building C	NRCC-PRF-01-E	Page 15 of 19
Project Address:	1101 S DWIGHT AVE. COMPTON 90220	Calculation Date/Time:	11:41, Fri, Sep 29, 2017
Compliance Scope:	Existing/Alteration	Input File Name:	2017-09-28 Longfellow ES BLDG. C - T-24.cbd16x

NRCC-PRF-MCH-DETAILS -SECTION START-

A. MECHANICAL VENTILATION AND REHEAT (Adapted from 2016-NRCC-MCH-03-E) — Confirmed: Plans ☐ Field ☐

1. DESIGN AIR FLOWS — 2. VENTILATION (§ 120.1)

CONDITIONED ZONE NAME	ID	SYSTEM TYPE	SYSTEM AIRFLOW	MINIMUM OUTDOOR AIR FLOW	MINIMUM OUTDOOR AIR FRACTION	MAXIMUM OUTDOOR AIR FLOW	MAXIMUM OUTDOOR AIR FRACTION	DOAS SUMMER SUPPLY AIR TEMP	DOAS WINTER SUPPLY AIR TEMP	DEMAND CONTROL VENTILATION	VENTILATION EFFECTIVENESS	VENT. VOLUME FLOW RATE	VENT. VOLUME FLOW RATE	MECH. VENTILATION RATE	OUTDOOR AIR INTAKE FLOW	Plans	Field
1 (VAV 1-C) Classroom 103C	Building C	1,400	350	0.25	NA	NA	Y	Building C	914	NA	23	15.0	345	345	NA	N	NA	☐	☐
2 (VAV 2-C) Classroom 104C	Building C	1,400	350	0.25	NA	NA	Y	Building C	914	NA	23	15.0	345	345	NA	N	NA	☐	☐
3 (VAV 4-C) Classroom 112C	Building C	1,400	350	0.25	NA	NA	Y	Building C	914	NA	23	15.0	345	345	NA	N	NA	☐	☐
4 (VAV 3-C) Classroom 105C	Building C	1,400	350	0.35	NA	NA	Y	Building C	914	NA

Project Name:	Longfellow Elementary School - Building D	NRCC-PRF-01-E	Page 3 of 19
Project Address:	1101 S DWIGHT AVE, COMPTON 90220	Calculation Date/Time:	09.07, Fri, Sep 29, 2017
Compliance Scope:	Existing/Alteration	Input File Name:	2017-09-28 Longfellow ES BLDG. D - T-24.cbd16x

C. PRIORITY PLAN CHECK/ INSPECTION ITEMS (In order of highest to lowest TDV energy savings)

1st	Indoor Fans: Check envelope and mechanical
2nd	Space Cooling: Check envelope and mechanical
3rd	Heat Rejection: Check envelope and mechanical
4th	Pumps & Misc.: Check mechanical
5th	Domestic Hot Water: Check mechanical
6th	Indoor Lighting: Check lighting
7th	Space Heating: Check envelope and mechanical

Compliance Margin By Energy Component (from Table 8 column A)

D. EXCEPTIONAL CONDITIONS

This building does not include service water heating. Verify that service water heating is not required and is not indicated in the design.

E. HERS VERIFICATION

This Section Does Not Apply.

F. ADDITIONAL REMARKS

None Provided.

Project Name:	Longfellow Elementary School - Building D	NRCC-PRF-01-E	Page 4 of 19
Project Address:	1101 S DWIGHT AVE, COMPTON 90220	Calculation Date/Time:	09.07, Fri, Sep 29, 2017
Compliance Scope:	Existing/Alteration	Input File Name:	2017-09-28 Longfellow ES BLDG. D - T-24.cbd16x

G. COMPLIANCE PATH & CERTIFICATE OF COMPLIANCE SUMMARY

Identify which building components use the performance or prescriptive path for compliance. "N/A" is not in project
For components that utilize the performance path, indicate the sheet number that includes mandatory notes on plans.

Building Component	Compliance Path	Compliance Forms (required for submittal)	Location of Mandatory Notes on Plans
Envelope	☐ Performance	NRCC-PRF-ENV-DETAILS (section of the NRCC-PRF-01-E)	
	☐ Prescriptive	NRCC-ENV-03 / 02 / 03 / 04 / 05 / 06-E	
	☒ NA		
Mechanical	☒ Performance	NRCC-PRF-MCH-DETAILS (section of the NRCC-PRF-01-E)	
	☐ Prescriptive	NRCC-MCH-00 / 01 / 02 / 03 / 04 / 05 / 06 / 07-E	
	☐ NA		
Domestic Hot Water	☐ Performance	NRCC-PRF-PLB-DETAILS (section of the NRCC-PRF-01-E)	
	☐ Prescriptive	NRCC-PLB-01-E	
	☒ NA		
Lighting (Indoor Conditioned)	☐ Performance	NRCC-PRF-LTI-DETAILS (section of the NRCC-PRF-01-E)	
	☐ Prescriptive	NRCC-LTI-02 / 02 / 03 / 04 / 05-E	
	☒ NA		
Covered Process: Commercial Kitchens	☐ Performance	52 (section of the NRCC-PRF-01-E)	
	☐ Prescriptive	NRCC-PRC-02-E	
	☒ NA		
Covered Process: Computer Rooms	☐ Performance	53 (section of the NRCC-PRF-01-E)	
	☐ Prescriptive	NRCC-PRC-02-E	
	☒ NA		
Covered Process: Laboratory Exhaust	☐ Performance	54 (section of the NRCC-PRF-01-E)	
	☐ Prescriptive	NRCC-PRC-02/ 03-E	
	☒ NA		

Project Name:	Longfellow Elementary School - Building D	NRCC-PRF-01-E	Page 5 of 19
Project Address:	1101 S DWIGHT AVE, COMPTON 90220	Calculation Date/Time:	09.07, Fri, Sep 29, 2017
Compliance Scope:	Existing/Alteration	Input File Name:	2017-09-28 Longfellow ES BLDG. D - T-24.cbd16x

H. CERTIFICATE OF INSTALLATION, CERTIFICATE OF ACCEPTANCE & CERTIFICATE OF VERIFICATION SUMMARY (NRCI/NRCA/NRCV) –
Documentation Author to indicate which Certificates must be submitted for the features to be recognized for compliance
(Retain copies and verify forms are completed and signed to post in field for Field Inspector to verify).
See Tables G, and H. in MCH and ETI Details Sections for Acceptance Tests and forms by equipment.

Building Component	Compliance Forms (required for submittal)	Confirmed: Pass	Confirmed: Fail
Envelope	☐ NRCI-ENV-01-E - For all buildings	☐	☐
	☒ NRCA-ENV-02-F - Sealed Envelope Air Penetration	☐	☐
	☒ NRCA-MCH-01-A - Outdoor Air	☐	☐
	☐ NRCA-MCH-03-A - Constant Volume Single Zone HVAC	☐	☐
	☐ NRCA-MCH-04-A - Air Distribution Duct Leakage	☐	☐
	☒ NRCA-MCH-05-A - Air Economizer Controls	☐	☐
	☐ NRCA-MCH-06-A - Demand Control Ventilation	☐	☐
	☒ NRCA-MCH-07-A – Supply Fan Variable Flow Controls	☐	☐
	☐ NRCA-MCH-08-A - Valve Leakage Test	☐	☐
	☐ NRCA-MCH-09-A - Supply Water Temp Reset Controls	☐	☐
	☐ NRCA-MCH-10-A- Hydronic System Variable Flow Controls	☐	☐
	☒ NRCA-MCH-11-A – Auto Demand Shed Controls	☐	☐
	☒ NRCA-MCH-12-A- Packaged (Unit) Expansion Units	☐	☐
	☐ NRCA-MCH-13-A- Air Handling Units and Zone Terminal Units	☐	☐
	☐ NRCA-MCH-14-A- Distributed Energy Storage	☐	☐
	☐ NRCA-MCH-15-A – Thermal Energy Storage	☐	☐
	☒ NRCA-MCH-16-A- Supply Air Temp Reset Controls	☐	☐
	☐ NRCA-MCH-17-A – Condensate Water Temp Reset Controls	☐	☐
	☐ NRCA-MCH-18-A- Energy Management Control Systems	☐	☐
	☐ NRCV-MCH-04-H- Duct Leakage Test	☐	☐

Project Name:	Longfellow Elementary School - Building D	NRCC-PRF-01-E	Page 6 of 19
Project Address:	1101 S DWIGHT AVE, COMPTON 90220	Calculation Date/Time:	09.07, Fri, Sep 29, 2017
Compliance Scope:	Existing/Alteration	Input File Name:	2017-09-28 Longfellow ES BLDG. D - T-24.cbd16x

H. CERTIFICATE OF INSTALLATION, CERTIFICATE OF ACCEPTANCE & CERTIFICATE OF VERIFICATION SUMMARY (NRCI/NRCA/NRCV) –
Documentation Author to indicate which Certificates must be submitted for the features to be recognized for compliance
(Retain copies and verify forms are completed and signed to post in field for Field Inspector to verify).
See Tables G, and H. in MCH and ETI Details Sections for Acceptance Tests and forms by equipment.

Building Component	Compliance Forms (required for submittal)	Confirmed: Pass	Confirmed: Fail
Plumbing	☐ NRCI-PLB-01-E - For all buildings with Plumbing Systems	☐	☐
	☐ NRCI-PLB-02-E - required on control systems in high-rise residential, hotel/motel application.	☐	☐
	☐ NRCI-PLB-03-E - Single dwelling unit systems in high-rise residential, hotel/motel application.	☐	☐
	☐ NRCI-PLB-21-H - HERS verified central systems in high-rise residential, hotel/motel application.	☐	☐
	☐ NRCI-PLB-22-H - HERS verified single dwelling unit systems in high-rise residential, hotel/motel application.	☐	☐
	☐ NRCI-PLB-23-E - HERS verified single dwelling unit systems in high-rise residential, hotel/motel application.	☐	☐
	☐ NRCV-PLB-21-H- HERS verified central systems in high-rise residential, hotel/motel application.	☐	☐
	☐ NRCV-PLB-22-H - HERS verified single dwelling unit systems in high-rise residential, hotel/motel application.	☐	☐
	☐ NRCV-STH-01-E - Any solar water heating.	☐	☐
Indoor Lighting	☐ NRCI-LTI-01-E - For all buildings	☐	☐
	☐ NRCI-LTI-02-E - Lighting control system, or for an Energy Management Control System (EMCS)	☐	☐
	☐ NRCI-LTI-03-E - Line-voltage track lighting integral current limiter, or for a supplementary overcurrent protection panel used to energize only line-voltage track lighting	☐	☐
	☐ NRCI-LTI-04-E - Two interlocked systems serving an auditorium, a convention center, a conference room, or a theater.	☐	☐
	☐ NRCI-LTI-05-E - Lighting Control Credit Power Adjustment Factor (PAF)	☐	☐
	☐ NRCI-LTI-06-E - Additional wattage installed in a video conferencing studio	☐	☐
	☐ NRCA-LTI-02-A - Occupancy sensors and automatic time switch controls.	☐	☐
	☐ NRCA-LTI-03-A - Autoxmtic daylighting controls.	☐	☐
	☐ NRCA-LTI-04-A - Demand responsive lighting controls	☐	☐
	☐ NRCI-LTD-01-E - Outdoor Lighting	☐	☐
Outdoor Lighting	☐ NRCI-LTD-02-E- EMCS Lighting Control System	☐	☐
	☐ NRCA-LTD-02-A - Outdoor Lighting Control	☐	☐
Sign Lighting	☐ NRCI-LTS-01-E – Sign Lighting	☐	☐
Electrical	☐ NRCI-ELC-05-E - Electrical Power Distribution	☐	☐
Photovoltaic	☐ NRCI-LTP-01-E Photovoltaic Systems	☐	☐

Project Name:	Longfellow Elementary School - Building D	NRCC-PRF-01-E	Page 7 of 19
Project Address:	1101 S DWIGHT AVE, COMPTON 90220	Calculation Date/Time:	09.07, Fri, Sep 29, 2017
Compliance Scope:	Existing/Alteration	Input File Name:	2017-09-28 Longfellow ES BLDG. D - T-24.cbd16x

H. CERTIFICATE OF INSTALLATION, CERTIFICATE OF ACCEPTANCE & CERTIFICATE OF VERIFICATION SUMMARY (NRCI/NRCA/NRCV) –
Documentation Author to indicate which Certificates must be submitted for the features to be recognized for compliance.
(Retain copies and verify forms are completed and signed to post in field for Field Inspector to verify).
See Tables G, and H. in MCH and ETI Details Sections for Acceptance Tests and forms by equipment.

Building Component	Compliance Forms (required for submittal)	Confirmed: Pass	Confirmed: Fail
Covered Process.	☐ NRCI-PRC-01-E Refrigerated Warehouse	☐	☐
	☐ NRCA-PRC-01-E- Refrigerated Warehouse- Evaporator Fan Motor Controls	☐	☐
	☐ NRCA-PRC-02-E- Refrigerated Warehouse- Evaporative Condenser Controls	☐	☐
	☐ NRCA-PRC-03-E- Refrigerated Warehouse- Air Cooled Condenser Controls	☐	☐
	☐ NRCA-PRC-04- Refrigerated Warehouse- Variable Speed Compressor	☐	☐
	☐ NRCA-PRC-06-E- Electrical Resistance Underslab Heating System	☐	☐

I. ENVELOPE GENERAL INFORMATION (See NRCC-PRF-ENV-DETAILS for more Information)

						Confirmed: Pass	Confirmed: Fail
1.	Total Conditioned Floor Area	9,869 ft²	5.	Number of Floors Above Grade	1		
2.	Total Unconditioned Floor Area	888 ft²	6.	Number of Floors Below Grade	0		
3.	Addition Conditioned Floor Area	0 ft²					
4.	Addition Unconditioned Floor Area	0 ft²					

J. Opaque Surfaces & Orientation

	S. Total Gross Surface Area	S. Total Fenestration Area	10. Window to Wall Ratio
North Wall:	2,268 ft²	468 ft²	20.6%
East Wall	936 ft²	0 ft²	00.0%
South Wall	2,268 ft²	0 ft²	00.0%
West Wall	0 ft²	0 ft²	00.0%
Total	**5,232 ft²**	**468 ft²**	**08.9%**
Roof	9,869 ft²	0 ft²	00.0%

Project Name:	Longfellow Elementary School - Building D	NRCC-PRF-01-E	Page 8 of 19
Project Address:	1101 S DWIGHT AVE, COMPTON 90220	Calculation Date/Time:	09.07, Fri, Sep 29, 2017
Compliance Scope:	Existing/Alteration	Input File Name:	2017-09-28 Longfellow ES BLDG. D - T-24.cbd16x

I. FENESTRATION ASSEMBLY SUMMARY — § 110.6 — Confirmed: Pass ☐ Fail ☐

1. Fenestration Assembly Name / Tag or I.D.	2. Fenestration Type / Product Type / Frame Type	3. Certification Method[1]	4. Assembly Method	5. Area ft²	6. Overall U-factor	7. Overall SHGC	8. Overall VT	9. Manufactured	Pass	Fail
Single Metal Clear	Vertical/Fenestration Fixed/Window Metal/Framing	Default Performance	Skylight	.46E	1.69	0.81	0.77	F	☐	☐

[1] Among standard fenestration shall have a sculpted NFRC Label (Single or Double) or use the CEC default values found in Table 110.6-A and Table 110.6-B. Entries of Glass (FOG) values are for the glass only, determined by the manufacturers and are shown for ease of evaluation. See each fenestration product per subsequent pair Nonresidential Appendix NA6 and are used in the analysis.

[2] Status In - New, E = Altered, E - Existing

Taking compliance credit for fenestration shading devices? (If "Yes", see NRCC-PRF-ENV-DETAILS for more information) — No

J. OPAQUE SURFACE ASSEMBLY SUMMARY — § 120.7 / § 140.3 — Confirmed: Pass ☐ Fail ☐

1. Surface Name	2. Surface Type	3. Area (ft²)	4. Framing Type	5. Cavity R-Value	6. Continuous R-Value	7. U-Factor / R-Factor / C-Factor	Pass	Fail
R-13 Wall4	Exterior Wall	6669	Wood	13	NA	U-Factor: 0.101	E	☐ ☐
R-13 Roof Cathedral10	Roof	6372	Wood	13	NA	U-Factor: 0.067	E	☐ ☐
Slab On Grade12	Underground Floor	6372	NA	0	NA	F-Factor: 0.730	E	☐ ☐

[1] Status: N - New, E = Altered, E - Existing

L. ROOFING PRODUCT SUMMARY — § 140.3 — Confirmed: Pass ☐ Fail ☐

1. Product Type	2. Product Density (lb/ft³)	3. Aged Solar Reflectance	4. Thermal Emittance	5. SRI	6. Cool Roof Credit	7. Roofing Product Description	Pass	Fail
R-13 Roof Cathedral10	4.65104	0.08	0.75	NA	No	NA	☐	☐

Project Name:	Longfellow Elementary School - Building D	NRCC-PRF-01-E	Page 9 of 19
Project Address:	1101 S DWIGHT AVE, COMPTON 90220	Calculation Date/Time:	09.07, Fri, Sep 29, 2017
Compliance Scope:	Existing/Alteration	Input File Name:	2017-09-28 Longfellow ES BLDG. D - T-24.cbd16x

M. HVAC SYSTEM SUMMARY (see NRCC-PRF-MCH-DETAILS for more information) — § 110.1 / § 110.2 — Confirmed: Pass ☐ Fail ☐

Dry System Equipment *(Pass & Economizer Info) Included Below in Table N)*

1. Equip Name	2. Equip Type	3. System Type (Simple * or Complex *)	4. Qty	5. Total Heating Output (kBtu/h)	6. Supp Heat Source (Y/N)	7. Total Cooling Output (kBtu/h)	8. Efficiency: Cooling	8. Efficiency: Heating	9. Acceptance Testing Required? (Y/N) *	10. Economizer	Pass	Fail
Building D	PVAV (Package)(7)(Heat)	Complex	1	342	No	0	342	EER-10.9	AFUE-81.0	Yes	N	☐	☐

[1] Dry System equipment includes furnaces, air handling units, heat pumps, etc.,
[2] Simple System must complete NRCV-MCH-04-E concerning Airflow rate/fan Power
[3] Complex Systems must complete NRCCMCH-04-E concerning Airflow rate/fan Power
[4] Fan Power Credit (FPC) may be taken for qualifiable fan systems in NRCC-PRF-MCH-DETAILS
[5] Status: N - New, E = Altered, E = Existing

Hot System Equipment Section Does Not Apply

Discrepancy between modeled and designed equipment sizing? (If "Yes", see Table F. "Additional Remarks" for an explanation) — No

N. ECONOMIZER & FAN SYSTEMS SUMMARY[1] — § 140.4 — Confirmed: Pass ☐ Fail ☐

1. Equip Name	2. Outside Air: CFM	3. Supply Fan: CFM	HP	BHP	TSP (Inch WC)	Control	4. Return Fan: CFM	HP	BHP	TSP (Inch WC)	Control	5. Economizer Type (If present)	Pass	Fail
Building D	2057	7500	9.830	9.830	4.98	VariableSpeedDrive	NA	NA	NA	NA	NA	FixedDryBulb	☐	☐

[1] Mechanical ventilation calculations and exhaust fans are included in the NRCC-PRF-MCH-DETAILS section

Project Name:	Longfellow Elementary School - Building D	NRCC-PRF-01-E	Page 10 of 19
Project Address:	1101 S DWIGHT AVE, COMPTON 90220	Calculation Date/Time:	09.07, Fri, Sep 29, 2017
Compliance Scope:	Existing/Alteration	Input File Name:	2017-09-28 Longfellow ES BLDG. D - T-24.cbd16x

O. EQUIPMENT CONTROLS — § 120.3 — Confirmed: Pass ☐ Fail ☐

1. Equip Name	2. Equip Type	3. Controls	Pass	Fail
Building D	PVAV	No DCV Controls, SOC Controls/ Fixed Drybulb Economizer/ Warmest Zone Supply Air Temp. Reset Optimzes Start/ No Evaporative Cooler	☐	☐

P. SYSTEM DISTRIBUTION SUMMARY — § 120.4/ § 140.4(l)

Dry System Distribution

1. Equip Name	2. Equip Type	3. Duct Leakage and Sealing Required per 140.4(l)	4. Ducts Leakage will be verified per NAS and NAA	5. Ducts: Insulation R-Value	Location	Confirmed: Pass	Confirmed: Fail
Building D	PVAV	No	NA	8	Unconditioned	☐	☐

Does the Project Include Zonal Systems? (If "Yes", see NRCC-PRF-MCH-DETAILS for system information)	No
Does the Project Include a Solar Hot Water System? (If "Yes", see NRCC-PRF-MCH-DETAILS for system information)	No
Multifamily or Hotel/ Motel Occupancy? (If "Yes", see NRCC-PRF-MCH-DETAILS for DHW system information)	No

Q. INDOOR CONDITIONED LIGHTING GENERAL INFO (see NRCC-PRF-LTI-DETAILS for more Info)* — § 140.6 — Confirmed: Pass ☐ Fail ☐

1. Occupancy Type [1,2]	2. Conditioned Floor Area ft² (ft²)	3. Installed Lighting Power (Watts)	4. Lighting Control Credits (Watts)	5. Additional (Custom) Allowance: Area Category Footcodes (Watts)	5. Additional (Custom) Allowance: Tailored Method (Watts)	Pass	Fail
Building Totals:				0	0		

[1] See ISMV-2(B-G-C
[2] See NRCC-LTI-02-E for unconditioned spaces
[3] Lighting exploration for zoning spaces (standard) Limit included in the table
[4] Multiple entry for an Occupancy Type may be included as the table or there have been aggregated for Building Stocks: Add more for zones from schedule

Project Name:	Longfellow Elementary School - Building D	NRCC-PRF-01-E	Page 11 of 19
Project Address:	1101 S DWIGHT AVE, COMPTON 90220	Calculation Date/Time:	09.07, Fri, Sep 29, 2017
Compliance Scope:	Existing/Alteration	Input File Name:	2017-09-28 Longfellow ES BLDG. D - T-24.cbd16x

R. INDOOR CONDITIONED LIGHTING SCHEDULE (Adapted from NRCC-LTI-01-E)* — § 130.0

This Section Does Not Apply

*If lighting power densities were used in the compliance model (building type/assembly) all need to be listed as exception forms for Luminaire Schedule details.

S1. COVERED PROCESS SUMMARY – ENCLOSED PARKING GARAGES — § 160.9

This Section Does Not Apply

S2. COVERED PROCESS SUMMARY – COMMERCIAL KITCHENS — § 160.9

This Section Does Not Apply

S3. COVERED PROCESS SUMMARY – COMPUTER ROOMS — § 160.9

This Section Does Not Apply

S4. COVERED PROCESS SUMMARY – LABORATORY EXHAUSTS — § 160.9

This Section Does Not Apply

T. UNMET LOAD HOURS

Thermal Zone Name	Cooling Unmet Load Hour Limit for Thermal Zone	Proposed Cooling Unmet Load Hours	Heating Unmet Load Hour Limit for Thermal Zone	Proposed Heating Unmet Load Hours
1-(VAV 1-D) Classroom 1020	150	0	150	228
2-(VAV 2-D) Classroom 1040	150	0	150	278
3-(VAV 3-D) Classroom 1050	150	0	150	291
4-(VAV 4-D) Classroom 1120	150	0	150	226
5-(VAV 5-D) Classroom 1130	150	0	150	228
6-(VAV 6-D) Classroom 1140	150	0	150	251

U. ENERGY USE SUMMARY

Energy Component	Standard Design Site (kWh/h)	Proposed Design Site (kWh/h)	Margin (kWh/h)	Standard Design Site (MBtu)	Proposed Design Site (MBtu)	Margin (MBtu)
Space Heating:	--	--	--	11.2	27.4	-16.2
Space Cooling:	11.9	8.7	3.2	--	--	--

Project Name:	Longfellow Elementary School - Building D	NRCC-PRF-01-E	Page 12 of 19
Project Address:	1101 S DWIGHT AVE, COMPTON 90220	Calculation Date/Time:	09.07, Fri, Sep 29, 2017
Compliance Scope:	Existing/Alteration	Input File Name:	2017-09-28 Longfellow ES BLDG. D - T-24.cbd16x

U. ENERGY USE SUMMARY

Energy Component	Standard Design Site (kWh/h)	Proposed Design Site (kWh/h)	Margin (kWh/h)	Standard Design Site (MBtu)	Proposed Design Site (MBtu)	Margin (MBtu)
Indoor Fans:	21.9	7.4	14.5	--	--	--
Heat Rejection	--	--	--	--	--	--
Pumps & Misc.	--	--	--	--	--	--
Domestic Hot Water.	--	--	--	39.8	33.8	6.0
Indoor Lighting	13.5	13.5	0.0	--	--	--
COMPLIANCE TOTAL	**47.3**	**29.6**	**17.7**	**51.0**	**67.2**	**-16.2**
Receptacle	14.5	14.5	0.0	--	--	--
Process	--	--	--	--	--	--
Other Ltg	--	--	--	--	--	--
TOTAL	**61.8**	**44.1**	**17.7**	**51.0**	**67.2**	**-16.2**

Project Name:	Longfellow Elementary School - Building D	NRCC-PRF-01-E	Page 13 of 19
Project Address:	1101 S DWIGHT AVE, COMPTON 90220	Calculation Date/Time:	09.07, Fri, Sep 29, 2017
Compliance Scope:	Existing/Alteration	Input File Name:	2017-09-28 Longfellow ES BLDG. D - T-24.cbd16x

DOCUMENTATION AUTHOR'S DECLARATION STATEMENT — § 10-103

I certify that this Certificate of Compliance documentation is accurate and complete.

Documentation Author Name: Jinkal Patel	
Company: Optimum Energy Design	Signature:
Address: 5200 East La Palma Avenue	Signature Date: 09/29/2017
City/State/Zip: Anaheim California 92807	CEA Certifications (if applicable):
Phone: (714)693-2277	

RESPONSIBLE PERSON'S DECLARATION STATEMENT

I certify the following under penalty of perjury, under the laws of the State of California:

1	I hereby affirm that I am eligible under the provisions of Division 3 of the Business and Professions Code to sign this document as the person responsible for its preparation; and that I am licensed in the State of California as a civil engineer; mechanical engineer, electrical engineer, or I am a licensed architect.
2	I affirm that I am eligible under the provisions of Division 3 of the Business and Professions Code by section 5537.2 or 6737.3 to sign this document as the person responsible for its preparation; and that I am a licensed contractor performing this work.
3	I affirm that I am eligible under Division 3 of the Business and Professions Code to sign this document because it pertains to a structure or type of work described as exempt pursuant to Business and Professions Code Sections 5537, 5538 and 6737.1.

Responsible Envelope Designer Name:	Signature: NOT IN SCOPE
Company: Optimum Energy Design	Date Signed:
Address: 5200 East La Palma Avenue	Declaration Statement Type:
City/State/Zip: Anaheim California 92807	Title: License #:
Phone: (714) 693-2277	
Responsible Lighting Designer Name:	Signature: NOT IN SCOPE
Company:	Date Signed:
Address:	Declaration Statement Type:
City/State/Zip:	Title: License #:
Phone:	
Responsible Mechanical Designer Name: Abby Banerjee	Signature:
Company: Optimum Energy Design	Date Signed: 09/29/2017
Address: 5200 East La Palma Avenue	Declaration Statement Type:
City/State/Zip: Anaheim California 92807	Title: License #: M29253
Phone: (714) 693-2277	

Project Name:	Longfellow Elementary School - Building D	NRCC-PRF-01-E	Page 14 of 19
Project Address:	1101 S DWIGHT AVE, COMPTON 90220	Calculation Date/Time:	09.07, Fri, Sep 29, 2017
Compliance Scope:	Existing/Alteration	Input File Name:	2017-09-28 Longfellow ES BLDG. D - T-24.cbd16x

NRCC-PRF-ENV-DETAILS -SECTION START-

A. OPAQUE SURFACE ASSEMBLY DETAILS — Confirmed: Pass ☐ Fail ☐

1. Surface Name	2. Surface Type	3. Description of Assembly Layers	4. Notes	Pass	Fail
R-13 Wall4	ExteriorWall	Stucco - 7/8 in. Vapor permeable felt - 1/8 in. Wood framed wall, Stick, OC, 2.5in., R-13 Gypsum Board - 1/2 in.		☐	☐
R-13 Roof Cathedral10	Roof	Asphalt shingles - 1/4 in. Vapor permeable felt - 1/8 in. Plywood - 1/2 in. Air - Cavity - Wall Roof Ceiling - 4 in. or more Wood framed roof, Attic, OC, 5.5in., R-13 Gypsum Board - 1/2 in.		☐	☐
Slab On Grade12	UndergroundFloor	Slab Type = UnInsulatedSlabOnGrade Insulation Orientation = None Insulation R-Value = R0		☐	☐

B. OVERHANG DETAILS (Adapted from NRCC-ENV-02-E)

This Section Does Not Apply

C. OPAQUE DOOR SUMMARY — Confirmed: Pass ☐ Fail ☐

1. Opaque Door Assembly Name / Tag or I.D.	2. Door Type	3. Certification Method	4. Operation	5. Area	6. Overall U-factor.	7. Status[1]	Pass	Fail
Wood Door7	WoodGreaterThanOrEqual1in1.75inThickDoor	Default Performance	Swinging	329.	0.500	E	☐	☐

[1] Status: N - New, E = Altered, E = Existing

Project Name:	Longfellow Elementary School - Building D	NRCC-PRF-01-E	Page 15 of 19
Project Address:	1101 S DWIGHT AVE, COMPTON 90220	Calculation Date/Time:	09.07, Fri, Sep 29, 2017
Compliance Scope:	Existing/Alteration	Input File Name:	2017-09-28 Longfellow ES BLDG. D - T-24.cbd16x

NRCC-PRF-MCH-DETAILS -SECTION START-

A. MECHANICAL VENTILATION AND REHEAT *(Adapted from 2016-NRCC-MCH-03-E)* — Confirmed: Pass ☐ Fail ☐

1. CONDITIONED ZONE NAME	ID	1. DEMAND CONTROL VENTILATION SYSTEM	1. ENERGY RECOVERY SYSTEM	1. ZONE AIR DISTRIBUTION EFFECTIVENESS	1. ZONE SECONDARY AIRFLOW SYSTEM	1. ZONE MINIMUM DISTRIBUTION AIRFLOW SYSTEM	1. ZONE DESIGN HEATING SYSTEM	2. VENTILATION (§ 120.1): VENTILATION ID	2. VENTILATION (§ 120.1): OCCUPANCY TYPES	2. VENTILATION (§ 120.1): AREA TYPES	2. VENTILATION (§ 120.1): DESIGN OCCUPANCY	2. VENTILATION (§ 120.1): AREA PER PERSON	2. VENTILATION (§ 120.1): TIME OF DAY	2. VENTILATION (§ 120.1): TIME OF WEEK	2. VENTILATION (§ 120.1): Ventilation Rate Procedure § 6.5	Pass	Fail
1-(VAV 1-D) Classroom 1020	Building D	1,400	350	0.25	NA	NA	Y	Building D	916	NA	33	15.0	343	343	NA	N	NA	☐	☐
2-(VAV 2-D) Classroom 1040	Building D	1,400	350	0.25	NA	NA	Y	Building D	916	NA	33	15.0	343	343	NA	N	NA	☐	☐
3-(VAV 3-D) Classroom 1050	Building D	1,400	350	0.25	NA	NA	Y	Building D	916	NA	23	15.0	343	343	NA	N	NA	☐	☐
4-(VAV 4-D) Classroom 1120	Building D	1,400	350	0.25	NA	NA	Y	Building D	916	NA	23	15.0	343	343	NA	N	NA	☐	☐
5-(VAV 5-D) Classroom 1130	Building D	1,400	350	0.25	NA	NA	Y	Building D	916	NA	23	15.0	343	343	NA	N	NA	☐	☐
6-(VAV 6-D) Classroom 1140	Building D	1,400	350	0.25	NA	NA	Y	Building D	916	NA	23	15.0	343	343	NA	N	NA	☐	☐
										TOTAL	0,373		NA	NA	NA			☐	☐

Project Name:	Longfellow El

STATE OF CALIFORNIA
MECHANICAL SYSTEMS
CEC-NRCC-MCH-01-E (Revised 01/16) CALIFORNIA ENERGY COMMISSION

CERTIFICATE OF COMPLIANCE	NRCC-MCH-01-E
Mechanical Systems	Page of
Project Name: Longfellow Elementary Schools-Building E	Date Prepared: 10/02/2017

A. MECHANICAL COMPLIANCE DOCUMENTS & WORKSHEETS (check box if worksheet is included)

For detailed instructions on the use of this and all Energy Efficiency Standards compliance forms, refer to the 2016 Nonresidential Manual
Note: The Enforcement Agency may require all forms to be incorporated onto the building plans.

YES	NO	Comp. Doc./Worksheet #	Title
◉	○	NRCC-MCH-01-E (Part 1 of 3)	Certificate of Compliance, Declaration. Required on plans for all submittals.
◉	○	NRCC-MCH-01-E (Part 2 of 3)	Certificate of Compliance, Required Acceptance Tests (MCH-02-A to 11-A). Required on plans for all submittals.
◉	○	NRCC-MCH-01-E (Part 3 of 3)	Certificate of Compliance, Required Acceptance Tests (MCH-12-A to 18-A). Required on plans where applicable.
◉	○	NRCC-MCH-02-E (Part 1 of 2)	Mechanical Dry Equipment Summary is required for all submittals with Central Air Systems. It is optional on plans.
○	◉	NRCC-MCH-02-E (Part 2 of 2)	Mechanical Wet Equipment Summary is required for all submittals with chilled water, hot water or condenser water systems. It is optional on plans.
◉	○	NRCC-MCH-03-E	Mechanical Ventilation and Reheat is required for all submittals with multiple zone heating and cooling systems. It is optional on plans.
○	◉	NRCC-MCH-07-E (Part 1 of 2)	Power Consumption of Fans. Required on plans where applicable
○	◉	NRCC-MCH-07-E (Part 2 of 2)	Power Consumption of Fans, Declaration. Required on plans where applicable

B. MECHANICAL HVAC ACCEPTANCE FORMS (check box for required compliance documents)

Test Performed By:

Designer:
This compliance document is to be used by the designer and attached to the plans. Listed below are all the acceptance tests for HVAC systems. The designer is required to check the applicable boxes for all acceptance tests that apply and list all equipment that requires an acceptance test. All equipment of the same type that requires a test, list the equipment description and the number of systems.

Installing Contractor:
The contractor who installed the equipment is responsible to either conduct the acceptance test themselves or have a qualified entity run the test for them. If more than one person has responsibility for the acceptance testing, each person shall sign and submit the Certificate of Acceptance applicable to the portion of the construction or installation for which they are responsible.

Enforcement Agency:
Plancheck - The NRCC-MCH-01-E compliance document is not considered a completed document and is not to be accepted by the building department unless the correct boxes are checked.

Test Description		MCH-02-A	MCH-03-A	MCH-04-A	MCH-05-A	MCH-06-A	MCH-07-A	MCH-08-A	MCH-09-A	MCH-10-A	MCH-11-A
Equipment Requiring Testing or Verification	# of Units	Outdoor Air	Single Zone Unitary	Air Distribution Ducts	Economizer Controls	Demand Controlled Ventilation (DCV)	Supply Fan VAV	Valve Leakage Test	Supply Water Temp. Reset	Hydronic System Variable Flow Control	Automatic Demand Shed Control
existing 20 Ton	1	☑	☑	☐	☐	☐	☐	☐	☐	☐	☐

Add Row | Remove Last

STATE OF CALIFORNIA
MECHANICAL SYSTEMS
CEC-NRCC-MCH-01-E (Revised 01/16) CALIFORNIA ENERGY COMMISSION

CERTIFICATE OF COMPLIANCE	NRCC-MCH-01-E
Mechanical Systems	Page of
Project Name: Longfellow Elementary Schools-Building E	Date Prepared: 10/02/2017

C. MECHANICAL HVAC ACCEPTANCE FORMS (check box for required compliance documents)

Test Performed By:

Designer:
This compliance document is to be used by the designer and attached to the plans. Listed below are all the acceptance tests for HVAC systems. The designer is required to check the applicable boxes for all acceptance tests that apply and list all equipment that requires an acceptance test. All equipment of the same type that requires a test, list the equipment description and the number of systems.

Installing Contractor:
The contractor who installed the equipment is responsible to either conduct the acceptance test themselves or have a qualified entity run the test for them. If more than one person has responsibility for the acceptance testing, each person shall sign and submit the Certificate of Acceptance applicable to the portion of the construction or installation for which they are responsible.

Enforcement Agency:
Plancheck - The NRCC-MCH-01-E compliance document is not considered a completed document and is not to be accepted by the building department unless the correct boxes are checked.
Inspector - Before occupancy permit is granted all newly installed process systems must be tested to ensure proper operations.

Test Description		MCH-12-A	MCH-13-A	MCH-14-A	MCH-15-A	MCH-16-A	MCH-17-A	MCH-18-A
Equipment Requiring Testing or Verification	# of Units	Fault Detection & Diagnostics for DX Units	Automatic Fault Detection & Diagnostics for Air & Zone	Distributed Energy Storage DX AC Systems	Thermal Energy Storage (TES) Systems	Supply Air Temperature Reset Controls	Condenser Water Reset Controls	ECMS
		☐	☐	☐	☐	☐	☐	☐

Add Row | Remove Last

STATE OF CALIFORNIA
MECHANICAL SYSTEMS
CEC-NRCC-MCH-01-E (Revised 01/16) CALIFORNIA ENERGY COMMISSION

CERTIFICATE OF COMPLIANCE	NRCC-MCH-01-E
Mechanical Systems	Page of
Project Name: Longfellow Elementary Schools-Building E	Date Prepared: 10/02/2017

DOCUMENTATION AUTHOR'S DECLARATION STATEMENT

1. I certify that this Certificate of Compliance documentation is accurate and complete.

Documentation Author Name: Jinkal Patel	Documentation Author Signature: [signature]
Company: Optimum Energy Design	Signature Date: 10/02/2017
Address: 5200 East LA Palma Avenue	CEA/ HERS Certification Identification (if applicable):
City/State/Zip: Anaheim, CA 92807	Phone: 714-693-2277

RESPONSIBLE PERSON'S DECLARATION STATEMENT

I certify the following under penalty of perjury, under the laws of the State of California:
1. The information provided on this Certificate of Compliance is true and correct.
2. I am eligible under Division 3 of the Business and Professions Code to accept responsibility for the building design or system design identified on this Certificate of Compliance (responsible designer).
3. The energy features and performance specifications, materials, components, and manufactured devices for the building design or system design identified on this Certificate of Compliance conform to the requirements of Title 24, Part 1 and Part 6 of the California Code of Regulations.
4. The building design features or system design features identified on this Certificate of Compliance are consistent with the information provided on other applicable compliance documents, worksheets, calculations, plans and specifications submitted to the enforcement agency for approval with this building permit application.
5. I will ensure that a completed signed copy of this Certificate of Compliance shall be made available with the building permit(s) issued for the building, and made available to the enforcement agency for all applicable inspections. I understand that a completed signed copy of this Certificate of Compliance is required to be included with the documentation the builder provides to the building owner at occupancy.

Responsible Designer Name: Abby Banerjee	Responsible Designer Signature: [signature]
Company: Optimum Energy Design	Date Signed: 10/02/2017
Address: 5200 East LA Palma Avenue	License: m29253
City/State/Zip: Anaheim, CA 92807	Phone: 714-693-2277

STATE OF CALIFORNIA
HVAC DRY & WET SYSTEM REQUIREMENTS
CEC-NRCC-MCH-02-E (Revised 01/16) CALIFORNIA ENERGY COMMISSION

CERTIFICATE OF COMPLIANCE	NRCC-MCH-02-E
HVAC Dry System Requirements	(Page 1 of 3)
Project Name: Longfellow Elementary Schools-Building E	Date Prepared: 10/02/2017

A. Equipment Tags and System Description[1]- Dry Systems | Existing unit

MANDATORY MEASURES	T-24 Sections	Reference to the Requirements in the Contract Documents[2]		
Heating Equipment Efficiency[3]	110.1 or 110.2(a)	Existing		
Cooling Equipment Efficiency[3]	110.1 or 110.2(a)	Existing		
HVAC or Heat Pump Thermostats	110.2(b), 110.2(c)	Existing		
Furnace Standby Loss Control	110.2(d)	Existing		
Low Leakage AHUs	110.2(f)	Existing		
Ventilation[4]	120.1(b)	Existing		
Demand Control Ventilation[5]	120.1(c)4	Existing		
Occupant Sensor Ventilation Control[6]	120.1(c)5, 120.2(e)3	Existing		
Shutoff and Reset Controls[7]	120.2(e)	Existing		
Outdoor Air and Exhaust Damper Control	120.2(f)	Existing		
Isolation Zones	120.2(g)	Existing		
Automatic Demand Shed Controls	120.2(h)	Existing		
Economizer FDD	120.2(i)	Existing		
Duct Insulation	120.4	Existing		
PRESCRIPTIVE MEASURES				
Equipment is sized in conformance with 140.4 (a & b)	140.4(a & b)	○ Yes ○ No	○ Yes ○ No	○ Yes ○ No
Supply Fan Pressure Control	140.4(c)	Existing		
Simultaneous Heat/Cool[8]	140.4(d)	Existing		
Economizer	140.4(e)	Existing		
Heat and Cool Air Supply Reset	140.4(f)	Existing		
Electric Resistance Heating[9]	140.4(g)	Existing		
Duct Leakage Sealing and Testing.[10]	140.4(l)	Existing		

Notes:
1. *Provide equipment tags (e.g. AHU 1 to 10) and system description (e.g. Single Duct VAV reheat) as appropriate. Multiple units with common requirements can be grouped together.*
2. *Provide references to plans (i.e. Drawing Sheet Numbers) and/or specifications (including Section name/number and relevant paragraphs) where each requirement is specified. Enter "N/A" if the requirement is not applicable to this system.*
3. *The referenced plans and specifications must include all of the following information: equipment tag, equipment nominal capacity, Title 24 minimum efficiency requirements, and actual rated equipment efficiencies. Where multiple efficiency requirements are applicable (e.g. full- and part-load) include all. Where appliance standards apply (110.1), identify where equipment is required to be listed per Title 20 1601 et seq.*
4. *Identify where the ventilation requirements are documented for each central HVAC system. Include references to both central unit schedules and sequences of operation. If one or more spaces is naturally ventilated identify where this is documented in the plans and specifications. Multiple zone central air systems must also provide a MCH-03-E compliance document.*
5. *If one or more spaces has demand controlled ventilation identify where it is specified including the sensor specifications and the sequence of operation.*
6. *If one or more space has occupant sensor ventilation control identify where it is specified including the sensor specifications and the sequence of operation*
7. *If the system is DDC identify the sequences for the system start/stop, optimal start, setback (if required) and setup (if required). For all systems identify the specification for the thermostats and time clocks (if applicable).*
8. *Identify where the heating, cooling and deadband airflows are scheduled for this system. Include a reference to the specification of the zone controls. Provide a MCH-03-E compliance document.*
9. *Enter N/A if there is no electric heating. If the system has electric heating indicate which exception to 140.4(g) applies.*
10. *If duct leakage sealing and testing is required, a MCH-04-A compliance document must be submitted.*

STATE OF CALIFORNIA
HVAC DRY & WET SYSTEM REQUIREMENTS
CEC-NRCC-MCH-02-E (Revised 01/16) CALIFORNIA ENERGY COMMISSION

CERTIFICATE OF COMPLIANCE	NRCC-MCH-02-E
HVAC Dry & Wet System Requirements	(Page 2 of 3)
Project Name: Longfellow Elementary Schools-Building E	Date Prepared: 10/02/2017

B. Equipment Tags and System Description[1]- Wet Systems (crossed out: N/A)

MANDATORY MEASURES	T-24 Sections	Reference to the Requirements in the Contract Documents[2]		
Heating Hot Water Equipment Efficiency[3]	110.1			
Cooling Chilled and Condenser Water Equipment Efficiency[3]	110.1, 140.4(i)			
Open and Closed Circuit Cooling Towers conductivity or flow-based controls	110.2(e) 1			
Open and Closed Circuit Cooling Towers Maximum Achievable Cycles of Concentration (LSI)[6]	110.2(e) 2			
Open and Closed Circuit Cooling Towers Flow Meter with analog output	110.2(e) 3			
Open and Closed Circuit Cooling Towers Overflow Alarm	110.2(e) 4		N/A	
Open and Closed Circuit Cooling Towers Efficient Drift Eliminators	110.2(e) 5			
Pipe Insulation	120.3			
PRESCRIPTIVE MEASURES				
Cooling Tower Fan Controls	140.4(h)2, 140.4(h)5	○ Yes ○ No	○ Yes ○ No	○ Yes ○ No
Cooling Tower Flow Controls	140.4(h)3			
Centrifugal Fan Cooling Towers[4]	140.4(h)4			
Air-Cooled Chiller Limitation[5]	140.4(j)			
Variable Flow System Design	140.4(k)			
Chiller and Boiler Isolation	140.4(k)			
CHW and HHW Reset Controls	140.4(k)			
WLHP Isolation Valves	140.4(k)			
VSD on CHW, CW & WLHP Pumps >5HP	140.4(k)			
DP Sensor Location	140.4(k)			

Notes:
1. *Provide equipment tags (e.g. CH 1 to 3) or system description (e.g. CHW loop) as appropriate. Multiple units with common requirements can be grouped together.*
2. *Provide references to plans (i.e. Drawing Sheet Numbers) and/or specifications (including Section name/number and relevant paragraphs) where each requirement is specified. Enter "N/A" if the requirement is not applicable to this system.*
3. *The referenced plans and specifications must include all of the following information: equipment tag, equipment nominal capacity, Title 24 minimum efficiency requirements, and actual rated equipment efficiencies. Where multiple efficiency requirements are applicable (e.g. full- and part-load) include all. For chillers operating at non-standard efficiencies provide the Kadj values. For chillers also note whether the efficiencies are Path A or Path B.*
4. *Identify if cooling towers have propeller fans. If towers use centrifugal fans document which exception is used.*
5. *If air-cooled chillers are used, document which exceptions have been used to comply with 140.4(j) and the total installed design capacity of the air-cooled chillers in the chilled water plant.*
6. *Identify the existence of a completed MCH-06-E when open or closed circuit cooling towers are specified to be installed, otherwise enter "N/A".*

STATE OF CALIFORNIA
HVAC SYSTEM REQUIREMENTS
CEC-NRCC-MCH-02-E (Revised 01/16) CALIFORNIA ENERGY COMMISSION

CERTIFICATE OF COMPLIANCE	NRCC-MCH-02-E
HVAC Wet System Requirements	(Page 3 of 3)
Project Name: Longfellow Elementary Schools-Building E	Date Prepared: 10/02/2017

DOCUMENTATION AUTHOR'S DECLARATION STATEMENT

1. I certify that this Certificate of Compliance documentation is accurate and complete.

Documentation Author Name: Jinkal Patel	Documentation Author Signature: [signature]
Company: Optimum Energy Design	Signature Date: 10/02/2017
Address: 5200 East LA Palma Avenue	CEA/ HERS Certification Identification (if applicable):
City/State/Zip: Anaheim, CA 92807	Phone: 714-693-2277

RESPONSIBLE PERSON'S DECLARATION STATEMENT

I certify the following under penalty of perjury, under the laws of the State of California:
1. The information provided on this Certificate of Compliance is true and correct.
2. I am eligible under Division 3 of the Business and Professions Code to accept responsibility for the building design or system design identified on this Certificate of Compliance (responsible designer).
3. The energy features and performance specifications, materials, components, and manufactured devices for the building design or system design identified on this Certificate of Compliance conform to the requirements of Title 24, Part 1 and Part 6 of the California Code of Regulations.
4. The building design features or system design features identified on this Certificate of Compliance are consistent with the information provided on other applicable compliance documents, worksheets, calculations, plans and specifications submitted to the enforcement agency for approval with this building permit application.
5. I will ensure that a completed signed copy of this Certificate of Compliance shall be made available with the building permit(s) issued for the building, and made available to the enforcement agency for all applicable inspections. I understand that a completed signed copy of this Certificate of Compliance is required to be included with the documentation the builder provides to the building owner at occupancy.

Responsible Designer Name: Abby Banerjee	Responsible Designer Signature: [signature]
Company: Optimum Energy Design	Date Signed:
Address: 5200 East LA Palma Avenue	License: m29253
City/State/Zip: Anaheim, CA 92807	Phone: 714-693-2277

STATE OF CALIFORNIA
MECHANICAL VENTILATION AND REHEAT
CEC-NRCC-MCH-03-E (Revised 05/16) CALIFORNIA ENERGY COMMISSION

CERTIFICATE OF COMPLIANCE	NRCC-MCH-03-E
Mechanical Ventilation & Reheat	Page of
Project Name: Longfellow Elementary Schools-Building E	Date Prepared: 10/02/2017

A. Mechanical Ventilation and Reheat

In lieu of this compliance document, the required outdoor ventilation rates and airflows may be shown on the plans or the calculations can be presented in a spreadsheet. Mechanical Ventilation and Reheat worksheet available on the Energy Commission's website at: http://www.energy.ca.gov/title24/2016standards/.
Note: In all of the calculations that compare a supply quantity to the REQ'D V.A. quantity, the actual percentage of outdoor air in the supply is ignored.
Areas in buildings for which natural ventilation is used should be clearly designated. Specifications must require that building operating instructions include explanations of the natural ventilation system.

ACTUAL DESIGN (FROM EQUIPMENT SCHEDULES, ETC)						AREA BASIS			OCCUPANCY BASIS			ROOM BASIS	MINIMUM		VAV REHEATED PRIMARY AIR CFM			VAV DEADBAND PRIMARY AIR CFM		
01	02	03	04	05	06	07	08	09	10	11	12	13	14	15	16	17	18	19	20	21
ZONE/SYSTEM/VAV BOX TAG	DESIGN PRIMARY COOLING AIRFLOW (CFM)	DESIGN PRIMARY DEADBAND AIRFLOW (CFM)	DESIGN PRIMARY HEATING AIRFLOW (CFM)	CONTROL TYPE DDC (Y/N)	TRANSFER AIRFLOW (CFM)	CONDITIONED AREA (ft²)	MIN CFM PER AREA	MIN CFM BY AREA	NUMBER OF PEOPLE	CFM PER PERSON	MIN CFM BY OCCUPANT	MIN CFM BY ROOM	REQ'D VENT AIRFLOW (CFM)	COMPLIES?	BASED DESIGN PRIMARY COOLING AIR	MAXIMUM REHEAT (CFM)	COMPLIES?	PRIMARY COOLING AIR	AIRFLOW	COMPLIES?
ZD-1	1600	400	1600	Yes		914	0.38	343	22.9	15	343		343	PAS						
ZD-2	1600	400	1600	Yes		914	0.38	343	22.9	15	343		343	PAS						
ZD-3	1600	400	1600	Yes		914	0.38	343	22.9	15	343		343	PAS						
ZD-4	1600	400	1600	Yes		914	0.38	343	22.9	15	343		343	PAS						
ZD-5	1600	400	1600	Yes		914	0.38	343	22.9	15	343		343	PAS						

Add Row | Remove Last

STATE OF CALIFORNIA
MECHANICAL VENTILATION AND REHEAT
CEC-NRCC-MCH-03-E (Revised 05/16) CALIFORNIA ENERGY COMMISSION

CERTIFICATE OF COMPLIANCE	NRCC-MCH-03-E
Mechanical Ventilation & Reheat	Page of
Project Name: Longfellow Elementary Schools-Building E	Date Prepared: 10/02/2017

DOCUMENTATION AUTHOR'S DECLARATION STATEMENT

1. I certify that this Certificate of Compliance documentation is accurate and complete.

Documentation Author Name: Jinkal Patel	Documentation Author Signature: [signature]
Company: Optimum Energy Design	Signature Date: 10/02/2017
Address: 5200 East LA Palma Avenue	CEA/ HERS Certification Identification (if applicable):
City/State/Zip: Anaheim, CA 92807	Phone: 714-693-2277

RESPONSIBLE PERSON'S DECLARATION STATEMENT

I certify the following under penalty of perjury, under the laws of the State of California:
1. The information provided on this Certificate of Compliance is true and correct.
2. I am eligible under Division 3 of the Business and Professions Code to accept responsibility for the building design or system design identified on this Certificate of Compliance (responsible designer).
3. The energy features and performance specifications, materials, components, and manufactured devices for the building design or system design identified on this Certificate of Compliance conform to the requirements of Title 24, Part 1 and Part 6 of the California Code of Regulations.
4. The building design features or system design features identified on this Certificate of Compliance are consistent with the information provided on other applicable compliance documents, worksheets, calculations, plans and specifications submitted to the enforcement agency for approval with this building permit application.
5. I will ensure that a completed signed copy of this Certificate of Compliance shall be made available with the building permit(s) issued for the building, and made available to the enforcement agency for all applicable inspections. I understand that a completed signed copy of this Certificate of Compliance is required to be included with the documentation the builder provides to the building owner at occupancy.

Responsible Designer Name: Abby Banerjee	Responsible Designer Signature: [signature]
Company: Optimum Energy Design	Date Signed: 10/02/2017
Address: 5200 East LA Palma Avenue	License: m29253
City/State/Zip: Anaheim, CA 92807	Phone: m29253

ARCHITECTS WLC
CLIENT FOCUSED • PASSION DRIVEN

SOUTHERN CALIFORNIA
8163 ROCHESTER AVENUE, SUITE 100
RANCHO CUCAMONGA
CALIFORNIA 91730-0729
TEL: 909-987-0909
www.wlcarchitects.com

LONGFELLOW ELEMENTARY SCHOOL HVAC REPLACEMENT
COMPTON UNIFIED SCHOOL DISTRICT
1101 S DWIGHT AVE.
COMPTON, CA 90220

LICENSED ARCHITECT MARK GRAHAM C-26046 03-31-19 STATE OF CALIFORNIA

REGISTERED PROFESSIONAL ENGINEER ABBY BANERJEE No. M29253 Exp. 6/30/19 MECHANICAL STATE OF CALIFORNIA

CONSULTANT

IDENTIFICATION STAMP
DIV. OF THE STATE ARCHITECT
OFFICE OF REGULATION SERVICES
APPL 03-118423
AC — FLS ✓ SS EY
DATE MAR 0 6 2018
FILE: 19-23

NO	DATE	BY	DESCRIPTION
#	REVISIONS		

DRAWN: KC	CHECKED:
DATE: 3/6/2018	SCALE:
PROJECT NUMBER: 570064	

TITLE 24
BUILDING E

DRAWING NUMBER: M-6.3

Project Name:	Longfellow Elementary School - Building F	NRCC-PRF-03-E	Page 1 of 19
Project Address:	1301 S DWIGHT AVE, COMPTON 90220	Calculation Date/Time:	07:26, Mon, Oct 02, 2017
Compliance Scope:	Existing/Alteration	Input File Name:	2017-09-28 Longfellow ES BLDG. F - T-24.ctd6d6x

A. PROJECT GENERAL INFORMATION

1.	Project Location (city)	COMPTON	9.	Standards Version	Compliance2016
2.	CA Zip Code	90220	9.	Compliance Software (version)	EnergyPro 7.1,
4.	Climate Zone	9	10.	Weather File	HAWTHORNE AGRITHROP-RUS_722956_CZ2010.epw
4.	Total Conditioned Floor Area in Scope	5,406 ft²	11.	Building Orientation (deg)	0[0]=Deg
5.	Total Unconditioned Floor Area	888 ft²	12.	Permitted Scope of Work	ExistingAlteration
6.	Total # of Stories (Habitable Above Grade)	1	13	Building Type(s)	Nonresidential
7.	Total # of Dwelling Units	0	14	Elev Type	NaturalGas

B. COMPLIANCE RESULTS FOR PERFORMANCE COMPONENTS (Annual TDV Energy Use, kBtu/ft² -yr) § 140.1

BUILDING COMPLIES

1. Energy Component	2. Standard Design (TDV)	3. Proposed Design (TDV)	4. Compliance Margin (TDV)	5. Percent Better than Standard
Space Heating	3.47	8.11	-4.65	-134.0%
Space Cooling	79.35	72.15	7.20	9.1%
Indoor Fans	97.97	45.37	52.60	53.5%
Heat Rejection	--	--	--	--
Pumps & Misc.	--	--	--	--
Domestic Hot Water	10.64	10.64	--	0.0%
Indoor Lighting	59.03	59.03	--	0.0%
COMPLIANCE TOTAL	**250.32**	**190.97**	**54.95**	**21.9%**
Receptacle	95.70	95.70	0.0	0.0%
Process	--	--	--	--
Other Up	--	--	--	--
TOTAL	**336.02**	**281.47**	**55.4**	**17.4%**

CA Building Energy Efficiency Standards- 2016 Nonresidential Compliance — Report Version: NRCC-PRF-01-E-00B0(2017-4377) — Report Generated at: 2017-10-02 07:42:39

Project Name:	Longfellow Elementary School - Building F	NRCC-PRF-03-E	Page 2 of 19
Project Address:	1301 S DWIGHT AVE, COMPTON 90220	Calculation Date/Time:	07:26, Mon, Oct 02, 2017
Compliance Scope:	Existing/Alteration	Input File Name:	2017-09-28 Longfellow ES BLDG. F - T-24.ctd6d6x

C. PRIORITY HVAC CHECK/ INSPECTION ITEMS (in order of highest to lowest TDV energy savings)

1st:	Indoor Fans: Check envelope and mechanical
2nd	Space Cooling: Check envelope and mechanical
3rd	Heat Rejection: Check envelope and mechanical
4th	Pumps & Misc.: Check mechanical
5th	Domestic Hot Water: Check mechanical
6th	Indoor Lighting: Check lighting
7th	Space Heating: Check envelope and mechanical

Compliance Margin by Energy Component (from Table B column H)

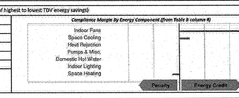

D. EXCEPTIONAL CONDITIONS

The building does not include service water heating. Verify that service water heating is not required and is not included in the design.

E. HERS VERIFICATION

This Section Does Not Apply

F. ADDITIONAL REMARKS

None Provided

CA Building Energy Efficiency Standards- 2016 Nonresidential Compliance — Report Version: NRCC-PRF-01-E-00B0(2017-4377) — Report Generated at: 2017-10-02 07:42:39

Project Name:	Longfellow Elementary School - Building F	NRCC-PRF-03-E	Page 3 of 19
Project Address:	1301 S DWIGHT AVE, COMPTON 90220	Calculation Date/Time:	07:26, Mon, Oct 02, 2017
Compliance Scope:	Existing/Alteration	Input File Name:	2017-09-28 Longfellow ES BLDG. F - T-24.ctd6d6x

G. COMPLIANCE PATH & CERTIFICATE OF COMPLIANCE SUMMARY

Identify within building components use the performance or prescriptive path for compliance. "N/A" not to project.
For components that utilize the performance plan. Indicate the plant number that includes mandatory notes on plans.

Building Component	Compliance Path	Compliance Forms (required for submittal)	Location of Mandatory Notes on Plans
Envelope	☐	Performance	NRCC-PRF-ENV-DETAILS (section of the NRCC-PRF-01-E)	
	☐	Prescriptive	NRCC-ENV-01 / 02 / 03 / 04 / 05 / 06-E	
	☒	N/A		
Mechanical	☒	Performance	NRCC-PRF-MCH-DETAILS (section of the NRCC-PRF-01-E)	
	☐	Prescriptive	NRCC-MCH-01 / 02 / 03 / 04 / 05 / 06 / 07-E	
	☐	N/A		
Domestic Hot Water	☐	Performance	NRCC-PRF-PLB-DETAILS (section of the NRCC-PRF-01-E)	
	☐	Prescriptive	NRCC-PRF-01-E	
	☒	N/A		
Lighting (Indoor Conditioned)	☐	Performance	NRCC-PRF-LTI-DETAILS (section of the NRCC-PRF-01-E)	
	☐	Prescriptive	NRCC-LTI-01 / 02 / 03 / 04 / 05-E	
	☒	N/A		
Covered Process (Commercial Kitchen)	☐	Performance	53 (section of the NRCC-PRF-01-E)	
	☐	Prescriptive	NRCC-PRC-01/ 04-E	
	☒	N/A		
Covered Process (Computer Rooms	☐	Performance	59 (section of the NRCC-PRF-01-E)	
	☐	Prescriptive	NRCC-PRC-02/ 04-E	
	☒	N/A		
Covered Process (Laboratory Exhaust	☐	Performance	54 (section of the NRCC-PRF-01-E)	
	☐	Prescriptive	NRCC-PRC-03/ 04-E	
	☒	N/A		

CA Building Energy Efficiency Standards- 2016 Nonresidential Compliance — Report Version: NRCC-PRF-01-E-00B0(2017-4377) — Report Generated at: 2017-10-02 07:42:39

Project Name:	Longfellow Elementary School - Building F	NRCC-PRF-03-E	Page 4 of 19
Project Address:	1301 S DWIGHT AVE, COMPTON 90220	Calculation Date/Time:	07:26, Mon, Oct 02, 2017
Compliance Scope:	Existing/Alteration	Input File Name:	2017-09-28 Longfellow ES BLDG. F - T-24.ctd6d6x

G. COMPLIANCE PATH & CERTIFICATE OF COMPLIANCE SUMMARY

The following building components are only eligible for prescriptive compliance. Indicate which are relevant to the project. — *The following building components may have mandatory requirements per Part 6. Indicate which are relevant to the project.*

Yes	N/A	Prescriptive Requirement	Compliance Forms	Yes	N/A	Mandatory Requirements	Compliance Forms
☒	☐	Lighting (Indoor Unconditioned) §140.6	NRCC-LTI-01 / 02 / 03 / 04 / 05-E	☐	☒	Commissioning: § 120.2 - Simple Systems Complex Systems	NRCC-CXR-01 / 02 / 03 / 04-E NRCC-CXR-01 / 20 / 04 / 05-E
☐	☒	Lighting (Outdoor) §140.7	NRCC-LTI-01-E / 02 / 03 / 04 / 05-E	☐	☒	Electrical: §130.5	NRCC-ELC-01-E
☐	☒	Lighting (Sign) §140.8	NRCC-LTI-01-E	☐	☒	Solar Ready: §110.10	NRCC-SRA-01 / 03-E
☐	☒	Solar Thermal Water Heating: §140.5	NRCC-LTI-01-E	☐ ☐ ☐ ☐ ☐ ☐	☒	Covered Process: §120.6 - Parking Garage - Commercial Refrigeration - Warehouse Refrigeration - Compressed Air - Process Boilers	NRCC-PRC-01-E NRCC-PRC-02-E NRCC-PRC-03-E NRCC-PRC-04/07/08-E NRCC-PRC-10-E NRCC-PRC-11-E

CA Building Energy Efficiency Standards- 2016 Nonresidential Compliance — Report Version: NRCC-PRF-01-E-00B0(2017-4377) — Report Generated at: 2017-10-02 07:42:39

Project Name:	Longfellow Elementary School - Building F	NRCC-PRF-03-E	Page 5 of 19
Project Address:	1301 S DWIGHT AVE, COMPTON 90220	Calculation Date/Time:	07:26, Mon, Oct 02, 2017
Compliance Scope:	Existing/Alteration	Input File Name:	2017-09-28 Longfellow ES BLDG. F - T-24.ctd6d6x

H. CERTIFICATE OF INSTALLATION, CERTIFICATE OF ACCEPTANCE & CERTIFICATE OF VERIFICATION SUMMARY (NRCI/NRCA/NRCV) –
Documentation Author to indicate which Certificates must be submitted for the features to be recognized for compliance
Obtain copies and verify forms are completed and signed to post in field for Field Inspector to verify.
See Tables 6C and H. in MCH and LTI Details Sections for Acceptance Tests and forms by equipment.

Building Component	Compliance Forms (required for submittal)	Confirmed: Pass	Confirmed: Fail
Envelope	☐ NRCI-ENV-01-E - For all buildings	☐	☐
	☐ NRCA-ENV-02-F - NFRC label verification for fenestration	☐	☐
	☒ NRCI-ENV-03-E - For all buildings with Mechanical Systems	☐	☐
	☐ NRCA-ENV-04-A - Outdoor Air	☐	☐
	☐ NRCA-MCH-03-A - Constant Volume Single Zone HVAC	☐	☐
	☐ NRCA-MCH-04-E - Air Distribution Duct Leakage	☐	☐
	☐ NRCA-MCH-05-A - Air Economizer Controls	☐	☐
	☐ NRCA-MCH-06-A - Demand Control Ventilation	☐	☐
	☒ NRCA-MCH-07-A – Supply Fan Variable Flow Controls	☐	☐
	☐ NRCA-MCH-08-A - Valve Leakage Test	☐	☐
	☐ NRCA-MCH-09-A – Supply Water Temp Reset Controls	☐	☐
	☐ NRCA-MCH-10-A - Hydronic System Variable Flow Controls	☐	☐
	☐ NRCA-MCH-11-A – Auto Demand Shed Controls	☐	☐
	☐ NRCA-MCH-12-A - Packaged Direct Expansion Units	☐	☐
	☐ NRCA-MCH-13-A - Air Handling Units and Zone Terminal Units	☐	☐
	☐ NRCA-MCH-14-A- Stabilized Energy Storage	☐	☐
	☐ NRCA-MCH-15-A – Thermal Energy Storage	☐	☐
	☒ NRCA-MCH-16-A- Supply Air Temp Reset Controls	☐	☐
	☐ NRCA-MCH-17-A – Condensate Water Temp Reset Controls	☐	☐
	☐ NRCA-MCH-18-A- Energy Management Controls Systems	☐	☐
	☐ NRCV-MCH-04-H- Duct Leakage Test	☐	☐

CA Building Energy Efficiency Standards- 2016 Nonresidential Compliance — Report Version: NRCC-PRF-01-E-00B0(2017-4377) — Report Generated at: 2017-10-02 07:42:39

Project Name:	Longfellow Elementary School - Building F	NRCC-PRF-03-E	Page 6 of 19
Project Address:	1301 S DWIGHT AVE, COMPTON 90220	Calculation Date/Time:	07:26, Mon, Oct 02, 2017
Compliance Scope:	Existing/Alteration	Input File Name:	2017-09-28 Longfellow ES BLDG. F - T-24.ctd6d6x

H. CERTIFICATE OF INSTALLATION, CERTIFICATE OF ACCEPTANCE & CERTIFICATE OF VERIFICATION SUMMARY (NRCI/NRCA/NRCV) –
Documentation Author to indicate which Certificates must be submitted for the features to be recognized for compliance
Obtain copies and verify forms are completed and signed to post in field for Field Inspector to verify.
See Tables 6C and H. in MCH and LTI Details Sections for Acceptance Tests and forms by equipment.

Building Component	Compliance Forms (required for submittal)	Confirmed: Pass	Confirmed: Fail
Plumbing	☐ NRCP-PLB-01-E - For all buildings with Plumbing Systems	☐	☐
	☐ NRCI-PLB-02-E - required on central systems in high-rise residential, hotel/motel application.	☐	☐
	☐ NRCI-PLB-03-E - Single dwelling unit systems in high-rise residential, hotel/motel application.	☐	☐
	☐ NRCI-PLB-23-E - HERS verified central systems in high-rise residential, hotel/motel application.	☐	☐
	☐ NRCI-PLB-22-E - HERS verified single dwelling unit systems in high-rise residential, hotel/motel application.	☐	☐
	☐ NRCP-PLB-23 H- HERS verified central systems in high-rise residential, hotel/motel application.	☐	☐
	☐ NRCP-PLB-22 H - HERS verified single dwelling unit systems in high-rise residential, hotel/motel application.	☐	☐
	☐ NRCA-SFM-01-E - Any solar water heating	☐	☐
	☐ NRCI-LTI-01-E – For all buildings	☐	☐
Indoor Lighting	☐ NRCI-LTI-02-E - Lighting control system, or for an Energy Management Control System (EMCS)	☐	☐
	☒ NRCI-LTI-03-E – Line-voltage track lighting integral current limiter, or for a supplementary overcurrent protection panel used to energize only line-voltage track lighting	☐	☐
	☐ NRCI-LTI-04E-Two interlocked systems serving an auditorium, a convention center, a conference room, or a theater	☐	☐
	☐ NRCI-LTI-05-E - Lighting Control Credit Power Adjustment Factor (PAF)	☐	☐
	☐ NRCI-LTI-06-E - Ambulatory/Lobby/Hallwhile a video conferencing studio	☐	☐
	☐ NRCA-LTI-10-A - Occupancy sensors and automatic time switch controls.	☐	☐
Outdoor Lighting	☐ NRCA-LTI-09-A - Automatic daylighting controls	☐	☐
	☐ NRCA-LTI-04-A - Demand responsive lighting controls	☐	☐
	☐ NRCI-LTI-01-E – Outdoor Lighting	☐	☐
	☒ NRCI-LTI-02-E - EMCS Lighting Control System	☐	☒
	☐ NRCA-LTI-02-A – Outdoor Lighting Control	☐	☐
Sign Lighting	☐ NRCI-LTI-03-E – Sign Lighting	☐	☐
Electrical	☐ NRCI-ELC-01-E – Electrical Power Distribution	☐	☐
Photovoltaic	☐ NRCI-SPV-01-E Photovoltaic Systems	☐	☐

CA Building Energy Efficiency Standards- 2016 Nonresidential Compliance — Report Version: NRCC-PRF-01-E-00B0(2017-4377) — Report Generated at: 2017-10-02 07:42:39

Project Name:	Longfellow Elementary School - Building F	NRCC-PRF-03-E	Page 7 of 19
Project Address:	1301 S DWIGHT AVE, COMPTON 90220	Calculation Date/Time:	07:26, Mon, Oct 02, 2017
Compliance Scope:	Existing/Alteration	Input File Name:	2017-09-28 Longfellow ES BLDG. F - T-24.ctd6d6x

H. CERTIFICATE OF INSTALLATION, CERTIFICATE OF ACCEPTANCE & CERTIFICATE OF VERIFICATION SUMMARY (NRCI/NRCA/NRCV) –
Documentation Author to indicate which Certificates must be submitted for the features to be recognized for compliance
Obtain copies and verify forms are completed and signed to post in field for Field Inspector to verify.
See Tables 6C and H. in MCH and LTI Details Sections for Acceptance Tests and forms by equipment.

Building Component	Compliance Forms (required for submittal)	Confirmed: Pass	Confirmed: Fail
Covered Process	☐ NRCP-PRC-01-E Refrigerated Warehouses	☐	☐
	☐ NRCA-PRC-01-E - Compressed Air Systems	☐	☐
	☐ NRCA-PRC-02-F- Kitchen Exhaust	☐	☐
	☐ NRCA-PRC-03-F – Garage Exhaust	☐	☐
	☐ NRCA-PRC-04-F- Refrigerated Warehouses- Evaporator Fan Motor Controls	☐	☐
	☐ NRCA-PRC-05-F- Refrigerated Warehouses- Evaporative Condenser Controls	☐	☐
	☐ NRCA-PRC-06-F- Refrigerated Warehouse- Air Cooled Condenser Controls	☐	☐
	☐ NRCA-PRC-07F- Refrigerated Warehouse- Variable Speed Compressor	☐	☐
	☐ NRCA-PRC-08-F- Electrical Resistance Underslab Heating System	☐	☐

I. ENVELOPE GENERAL INFORMATION (See NRCC-PRF-ENV-DETAILS for more information)

				Confirmed: Pass	Confirmed: Fail
1.	Total Conditioned Floor Area	5,406 ft²	3. Number of Floors Above Grade	1	
2.	Total Unconditioned Floor Area	888 ft²	4. Number of Floors Below Grade	0	
4.	Addition Conditioned Floor Area	0 ft²			
4.	Addition Unconditioned Floor Area	0 ft²			

5. Opaque Surfaces & Orientation	6. Total Gross Surface Area	7. Total Fenestration Area	10. Window to Wall Ratio
North Wall	2,268 ft²	468 ft²	20.6%
East Wall	486 ft²	0 ft²	00.0%
South Wall	2,268 ft²	0 ft²	00.0%
West Wall	0 ft²	0 ft²	00.0%
Total:	5,222 ft²	468 ft²	08.9%
Roof	6,464 ft²	0 ft²	00.0%

CA Building Energy Efficiency Standards- 2016 Nonresidential Compliance — Report Version: NRCC-PRF-01-E-00B0(2017-4377) — Report Generated at: 2017-10-02 07:42:39

Project Name:	Longfellow Elementary School - Building F	NRCC-PRF-03-E	Page 8 of 19
Project Address:	1301 S DWIGHT AVE, COMPTON 90220	Calculation Date/Time:	07:26, Mon, Oct 02, 2017
Compliance Scope:	Existing/Alteration	Input File Name:	2017-09-28 Longfellow ES BLDG. F - T-24.ctd6d6x

I. FENESTRATION ASSEMBLY SUMMARY § 110.6 — Confirmed: Pass / Fail

1. Fenestration Assembly Name / Tag or ID.	2. Fenestration Type / Product Type / Frame Type	3. Certification Method*	4. Assembly Method	5. Area ft²	6. Overall U-factor	7. Overall SHGC	8. Overall VT.	Pass	Fail
Single Metal Clear	Vertical/Fenestration Fixed/Window Metal/Framing	Default Performance	Sitebuilt	468	1.19	0.83	0.72	☐	☐

Hourly modeled fenestration must have a project file (.ribd2x) submitted for the CEC default values found in Table 110.6-A and Table 110.6-B. Center of Glass (COG) values are for the glass only, determined by the rating procedure, and not shown for area of assessment. Site-built fenestration values are calculated per Nonresidential Appendix NA6 and not used in the analysis.

** Tables B-4, B-5, B-6, B-7, B-8, B-9, B-10, B-11, B-12, B-13, B-14, B-15, B-16, B-17, B-18, B-19, B-20, B-21, B-22, B-23, B-24, B-25, B-26, B-27, B-28, B-29, B-30, B-31, B-32, B-33, B-34, B-35, B-36, B-37, B-38, B-39, B-40, B-41, B-42, B-43,

Project Name:	Longfellow Elementary School - Building G	NRCC-PRF-01-E	Page 1 of 19
Project Address:	1101 S DWIGHT AVE. COMPTON 90220	Calculation Date/Time:	07:54, Mon, Oct 02, 2017
Compliance Scope:	Existing/Alteration	Input File Name:	2017-09-28 Longfellow ES BLDG. G - T-24.cbd16x

A. PROJECT GENERAL INFORMATION

1.	Project Location (city)	COMPTON	
2.	CA Zip Code	90220	
3.	Climate Zone	9	
4.	Total Conditioned Floor Area in Scope:	2,639 ft²	
5.	Total Unconditioned Floor Area	466 ft²	
6.	Total # of Stories (Website Above Grade)	1	
7.	Total # of dwelling units	0	
8.	Standards Version	Compliance2016	
9.	Compliance Software (version)	Energy Pro 7.1	
10.	Weather File	HWATHORNE_NORTHROP-RSD_723956_CZ2010.epw	
11.	Building Orientation (deg)	270 deg	
12.	Permitted Scope of Work	Existing/Alteration	
13	Building Type(s)	Nonresidential	
14	Gas Type	Naturalgas	

B. COMPLIANCE RESULTS FOR PERFORMANCE COMPONENTS (Annual TDV Energy Use, kBtu/ft ²-yr) — § 140.1

BUILDING COMPLIES

1. Energy Component	2. Standard Design (TDV)	3. Proposed Design (TDV)	4. Compliance Margin (TDV)	5. Percent Better than Standard
Space Heating	3.58	8.03	-4.45	-124.3%
Space Cooling	79.59	54.51	25.09	31.5%
Indoor Fans	99.43	25.71	73.72	74.1%
Heat Rejection	--	--	--	--
Pumps & Misc.	--	--	--	--
Domestic Hot Water	12.39	12.39	--	0.0%
Indoor Lighting	59.89	59.89	--	0.0%
COMPLIANCE TOTAL	**254.47**	**160.03**	**94.44**	**37.1%**
Receptacle	66.50	65.70	0.8	0.0%
Process	--	--	--	--
Other tbg:				
TOTAL	**320.17**	**233.73**	**94.4**	**29.5%**

CA Building Energy Efficiency Standards- 2016 Nonresidential Compliance — Report Version: NRCC-PRF-01-E-08082017-4377 — Report Generated at: 2017-10-02 07:58:50

Project Name:	Longfellow Elementary School - Building G	NRCC-PRF-01-E	Page 2 of 19
Project Address:	1101 S DWIGHT AVE. COMPTON 90220	Calculation Date/Time:	07:54, Mon, Oct 02, 2017
Compliance Scope:	Existing/Alteration	Input File Name:	2017-09-28 Longfellow ES BLDG. G - T-24.cbd16x

C. PRIORITY PLAN CHECK/ INSPECTION ITEMS (In order of highest to lowest TDV energy savings):

1st	Indoor Fans: Check envelope and mechanical
2nd	Space Cooling: Check envelope and mechanical
3rd	Heat Rejection: Check envelope and mechanical
4th	Pumps & Misc.: Check mechanical
5th	Domestic Hot Water: Check mechanical
6th	Indoor Lighting: Check lighting
7th	Space Heating: Check envelope and mechanical

Compliance Margin by Energy Component (from Table B column 4)

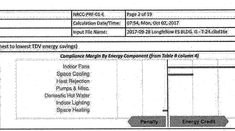

G. EXCEPTIONAL CONDITIONS

The building does not include service water heating. Verify that service water heating is not required and it is not included in the design.

E. HERS VERIFICATION

This Section Does Not Apply

F. ADDITIONAL REMARKS

None Provided

CA Building Energy Efficiency Standards- 2016 Nonresidential Compliance — Report Version: NRCC-PRF-01-E-08082017-4377 — Report Generated at: 2017-10-02 07:58:50

Project Name:	Longfellow Elementary School - Building G	NRCC-PRF-01-E	Page 3 of 19
Project Address:	1101 S DWIGHT AVE. COMPTON 90220	Calculation Date/Time:	07:54, Mon, Oct 02, 2017
Compliance Scope:	Existing/Alteration	Input File Name:	2017-09-28 Longfellow ES BLDG. G - T-24.cbd16x

G. COMPLIANCE PATH & CERTIFICATE OF COMPLIANCE SUMMARY

Identify which building components use the performance or prescriptive path for compliance. "N/A" not in project.
For components that utilize the performance path, indicate the sheet number that includes mandatory notes on plans.

Building Component	Compliance Path	Compliance Forms (required for submittal)	Location of Mandatory Notes on Plans
Envelope	☐ Performance	NRCC-PRF-ENV-DETAILS (section of the NRCC-PRF-01-E)	
	☐ Prescriptive	NRCC-ENV-01 / 02 / 03 / 04 / 05 / 06-E	
	☒ N/A		
Mechanical	☒ Performance	NRCC-PRF-MCH-DETAILS (section of the NRCC-PRF-01-E)	
	☐ Prescriptive	NRCC-MCH-01 / 02 / 03 / 04 / 05 / 06 / 07-E	
	☐ N/A		
Domestic Hot Water	☐ Performance	NRCC-PRF-PLB-DETAILS (section of the NRCC-PRF-01-E)	
	☐ Prescriptive	NRCC-PLB-01-E	
	☒ N/A		
Lighting (Indoor Conditioned)	☐ Performance	NRCC-PRF-LTI-DETAILS (section of the NRCC-PRF-01-E)	
	☐ Prescriptive	NRCC-LTI-01 / 02 / 03 / 04 / 05-E	
	☒ N/A		
Covered Process: Commercial Kitchens	☐ Performance	52 (section of the NRCC-PRF-01-E)	
	☐ Prescriptive	NRCC-PRC-01 / 03-E	
	☒ N/A		
Covered Process: Computer Rooms	☐ Performance	53 (section of the NRCC-PRF-01-E)	
	☐ Prescriptive	NRCC-PRC-02/ 03-E	
	☒ N/A		
Covered Process: Laboratory Exhaust	☐ Performance	54 (section of the NRCC-PRF-01-E)	
	☐ Prescriptive	NRCC-PRC-02/ 03-E	
	☒ N/A		

CA Building Energy Efficiency Standards- 2016 Nonresidential Compliance — Report Version: NRCC-PRF-01-E-08082017-4377 — Report Generated at: 2017-10-02 07:59:50

Project Name:	Longfellow Elementary School - Building G	NRCC-PRF-01-E	Page 4 of 19
Project Address:	1101 S DWIGHT AVE. COMPTON 90220	Calculation Date/Time:	07:54, Mon, Oct 02, 2017
Compliance Scope:	Existing/Alteration	Input File Name:	2017-09-28 Longfellow ES BLDG. G - T-24.cbd16x

G. COMPLIANCE PATH & CERTIFICATE OF COMPLIANCE SUMMARY

The following building components are only eligible for prescriptive compliance. Indicate which are relevant to the project. — *The following building components may have mandatory requirements per Part 6, indicate which are relevant to the project.*

Yes	NA	Prescriptive Requirement	Compliance Forms	Yes	NA	Mandatory Requirement	Compliance Forms
☐	☒	Lighting (Indoor Unconditioned) §140.6	NRCC-LTI-01 / 02 / 03 / 04 / 05-E	☐	☑	Commissioning: §110.8 Simple Systems: Complex Systems:	NRCC-CXR-01 / 02 / 03 / 05-E NRCC-CXR-01 / 02 / 04 / 05-E
☐	☒	Lighting (Outdoor) §147.7	NRCC-LTO-01 / 02 / 03-E	☐	☑	Electrical: §130.5	NRCC-ELC-01-E
☐	☒	Lighting (Sign) §140.8	NRCC-LTI-01-E	☐	☑	Solar Ready: §110.10	NRCC-SRA-01 / 03-E
				☐	☑	Covered Process: §120.6 Parking Garage:	NRCC-PRC-01-E NRCC-PRC-02-E
☐	☒	Solar Thermal Water Heating: §140.5	NRCC-LTI-01-E	☐	☑	Commercial Refrigeration Warehouse Refrigeration	NRCC-PRC-03-E NRCC-PRC-04/05-E
				☐	☑	Compressed Air Process Boilers:	NRCC-PRC-10-E NRCC-PRC-11-E

CA Building Energy Efficiency Standards- 2016 Nonresidential Compliance — Report Version: NRCC-PRF-01-E-08082017-4377 — Report Generated at: 2017-10-02 07:59:50

Project Name:	Longfellow Elementary School - Building G	NRCC-PRF-01-E	Page 5 of 19
Project Address:	1101 S DWIGHT AVE. COMPTON 90220	Calculation Date/Time:	07:54, Mon, Oct 02, 2017
Compliance Scope:	Existing/Alteration	Input File Name:	2017-09-28 Longfellow ES BLDG. G - T-24.cbd16x

H. CERTIFICATE OF INSTALLATION, CERTIFICATE OF ACCEPTANCE & CERTIFICATE OF VERIFICATION SUMMARY (NRCI/NRCA/NRCV) –
Documentation Author to indicate which Certificates must be submitted for the features to be recognized for compliance.
(Retain copies and verify forms are completed and signed to post in field for Field Inspector to verify).
See Tables G, and H, in MCH and ETI Details Sections for Acceptance Tests and forms by equipment.

Building Component	Compliance Forms (required for submittal)	Confirmed: Post	Confirmed: Fail
Envelope	☐ NRCI-ENV-01-E – For all buildings	☐	☐
	☐ NRCA-ENV-02-F- NFRC Label verification for fenestration	☐	☐
	☒ NRCI-MCH-01-E - For all buildings with Mechanical Systems:	☐	☐
	☒ NRCA-MCH-02-A- Outdoor Air	☐	☐
	☐ NRCA-MCH-03-A – Constant Volume Single Zone HVAC	☐	☐
	☐ NRCA-MCH-04-A- Air Distribution Duct Leakage	☐	☐
	☒ NRCA-MCH-05-A- Air Economizer Controls	☐	☐
	☐ NRCA-MCH-06-A- Demand Control Ventilation	☐	☐
	☒ NRCA-MCH-07A-A – Supply Fan Variable Flow Controls	☐	☐
	☐ NRCA-MCH-08-A- Valve Leakage Test	☐	☐
	☐ NRCA-MCH-09-A – Supply Water Temp Reset Controls	☐	☐
	☐ NRCA-MCH-10-A- Hydronic System Variable Flow Controls	☐	☐
	☒ NRCA-MCH-11-A – Auto Demand Shed Controls	☐	☐
	☒ NRCA-MCH-12-A- Packaged Direct Expansion Units	☐	☐
	☐ NRCA-MCH-13-A- Air Handling Units and Zone Terminal Units	☐	☐
	☐ NRCA-MCH-14-A- Distributed Energy Storage	☐	☐
	☐ NRCA-MCH-15-A – Thermal Energy Storage	☐	☐
	☒ NRCA-MCH-16-A- Supply Air Temp Reset Controls	☐	☐
	☐ NRCA-MCH-17A – Condensing Water Temp Reset Controls	☐	☐
	☐ NRCA-MCH-18-A- Energy Management Controls Systems	☐	☐
	☐ NRCV-MCH-04-H- Duct Leakage Test	☐	☐

CA Building Energy Efficiency Standards- 2016 Nonresidential Compliance — Report Version: NRCC-PRF-01-E-08082017-4377 — Report Generated at: 2017-10-02 07:59:50

Project Name:	Longfellow Elementary School - Building G	NRCC-PRF-01-E	Page 6 of 19
Project Address:	1101 S DWIGHT AVE. COMPTON 90220	Calculation Date/Time:	07:54, Mon, Oct 02, 2017
Compliance Scope:	Existing/Alteration	Input File Name:	2017-09-28 Longfellow ES BLDG. G - T-24.cbd16x

H. CERTIFICATE OF INSTALLATION, CERTIFICATE OF ACCEPTANCE & CERTIFICATE OF VERIFICATION SUMMARY (NRCI/NRCA/NRCV) –
Documentation Author to indicate which Certificates must be submitted for the features to be recognized for compliance.
(Retain copies and verify forms are completed and signed to post in field for Field Inspector to verify).
See Tables G, and H, in MCH and ETI Details Sections for Acceptance Tests and forms by equipment.

Building Component	Compliance Forms (required for submittal)	Confirmed: Post	Confirmed: Fail
Plumbing	☐ NRCI-PLB-01-E – For all buildings with Plumbing Systems	☐	☐
	☐ NRCI-PLB-02-E – required on-central systems in high-rise residential, hotel/motel application.	☐	☐
	☐ NRCI-PLB-03-E – Single dwelling unit systems in high-rise residential, hotel/motel application.	☐	☐
	☐ NRCI-PLB-12-E – HERS verified central systems in high-rise residential, hotel/motel application.	☐	☐
	☐ NRCI-PLB-23-E – HERS verified single dwelling unit systems in high-rise residential, hotel/motel application.	☐	☐
	☐ NRCI-PLB-24-N- HERS verified central systems in high-rise residential, hotel/motel application.	☐	☐
	☐ NRCV-PLB-22-H – HERS verified single dwelling unit systems in high-rise residential, hotel/motel application.	☐	☐
	☐ NRCI-STH-01-E – Any solar water heating	☐	☐
Indoor Lighting	☐ NRCI-LTI-01-E – For all buildings	☐	☐
	☐ NRCI-LTI-03-E – Lighting control system, or for an Energy Management Control System (EMCS)	☐	☐
	☐ NRCI-LTI-05-E – Line-voltage track lighting integral current limiter, or for a supplementary overcurrent protective panel used to energize only line-voltage track lighting	☐	☐
	☐ NRCI-LTI-07-E – Two Interlocked systems serving an auditorium, a convention center, a conference room, or a theater	☐	☐
	☐ NRCI-LTI-05-E – Lighting Control Credit Power Adjustment Factor (PAF)	☐	☐
	☐ NRCI-LTI-06-E – Additional wattage installed in a video conferencing studio	☐	☐
	☐ NRCA-LTI-02-A – Occupancy sensors and automatic time switch controls.	☐	☐
Outdoor Lighting	☐ NRCA-LTI-03-A – Automatic daylighting controls	☐	☐
	☐ NRCA-LTI-04-A – Demand responsive lighting controls	☐	☐
	☐ NRCI-LTO-01-E — Outdoor Lighting	☐	☐
	☐ NRCI-LTO-02-E- EMCS Lighting Control System	☐	☐
	☐ NRCA-LTO-03-A – Outdoor Lighting Control	☐	☐
Sign Lighting	☐ NRCI-LTS-01-E – Sign Lighting	☐	☐
Electrical	☐ NRCI-ELC-01-E – Electrical Power Distribution	☐	☐
Photovoltaic	☐ NRCI-LPO-01-E Photovoltaic Systems	☐	☐

CA Building Energy Efficiency Standards- 2016 Nonresidential Compliance — Report Version: NRCC-PRF-01-E-08082017-4377 — Report Generated at: 2017-10-02 07:59:50

Project Name:	Longfellow Elementary School - Building G	NRCC-PRF-01-E	Page 7 of 19
Project Address:	1101 S DWIGHT AVE. COMPTON 90220	Calculation Date/Time:	07:54, Mon, Oct 02, 2017
Compliance Scope:	Existing/Alteration	Input File Name:	2017-09-28 Longfellow ES BLDG. G - T-24.cbd16x

H. CERTIFICATE OF INSTALLATION, CERTIFICATE OF ACCEPTANCE & CERTIFICATE OF VERIFICATION SUMMARY (NRCI/NRCA/NRCV) –
Documentation Author to indicate which Certificates must be submitted for the features to be recognized for compliance.
(Retain copies and verify forms are completed and signed to post in field for Field Inspector to verify).
See Tables G, and H, in MCH and ETI Details Sections for Acceptance Tests and forms by equipment.

Building Component	Compliance Forms (required for submittal)	Confirmed: Post	Confirmed: Fail
Covered Process:	☐ NRCI-PRC-01-E- Refrigerated Warehouse	☐	☐
	☐ NRCI-PRC-03-E- Compressed Air Systems	☐	☐
	☐ NRCA-PRC-03-E- Kitchen Exhaust	☐	☐
	☐ NRCA-PRC-04/05-E- Garage Exhaust	☐	☐
	☐ NRCA-PRC-04/05-E- Refrigerated Warehouse- Evaporator Fan Motor Controls	☐	☐
	☐ NRCA-PRC-05-E- Refrigerated Warehouse- Evaporative Condenser Controls	☐	☐
	☐ NRCA-PRC-07-E- Refrigerated Warehouse- Air Cooled Condenser Controls	☐	☐
	☐ NRCA-PRC-07E- Refrigerated Warehouse- Variable Speed Compressor.	☐	☐
	☐ NRCA-PRC-08-E- Electrical Resistance Underslab Heating System	☐	☐

CA Building Energy Efficiency Standards- 2016 Nonresidential Compliance — Report Version: NRCC-PRF-01-E-08082017-4377 — Report Generated at: 2017-10-02 07:59:50

Project Name:	Longfellow Elementary School - Building G	NRCC-PRF-01-E	Page 8 of 19
Project Address:	1101 S DWIGHT AVE. COMPTON 90220	Calculation Date/Time:	07:54, Mon, Oct 02, 2017
Compliance Scope:	Existing/Alteration	Input File Name:	2017-09-28 Longfellow ES BLDG. G - T-24.cbd16x

I. FENESTRATION ASSEMBLY SUMMARY — § 110.6 — Confirmed: Post / Fail

1. Fenestration Assembly Name / Tag or I.D.	2. Fenestrative Type / Product Type / Frame Type	3. Certification Method¹	4. Assembly Method	5. Area ft²	6. Overall U-factor	7. Overall SHGC	8. Overall VT	9. Exempt	Post	Fail
Single Metal Clear	VerticalFenestration FixedWindow MetalFraming	Default Performance	Slidebilt	234	1.19	0.81	0.77	E	☐	☐

¹ Area weighted fenestration must have a certified NFRC Label Certificate or use the CEC default tables found in Nefa 1116 4-4 and Tbl# 116 6-8. Center of Glass (COG) values are for the glass only, determined by the manufacturer/entity and not chosen by rated of fenestration. Use dual fenestration values; see calculated per Nonresidential Appendix NA6 and site-built NA 6 for details.
² Status: A – New, E – Altered, R – Existing

Taking compliance credit for fenestration shading devices? (If "Yes", see NRCC-PRF-ENV-DETAILS for more information) — No

K. OPAQUE SURFACE ASSEMBLY SUMMARY — § 120.7 / § 140.3 — Confirmed: Post / Fail

1. Surface Name	2. Surface Type	3. Area (ft²)	4. Framing Type	5. Cavity R-Value	6. Continuous R-Value	Cool Roof	Post	Fail
R-12 Walls	ExteriorWall	3624	Wood	13	NA		☐	☐
R-13 Roof Cathedral11	Roof	3520	Wood	19	NA		☐	☐
Slab On Grade13	UndergroundFloor	3520	NA	0	NA		☐	☐

* Enter R - Value, A – Allowed, E – Existing

L. ROOFING PRODUCT SUMMARY — § 140.3 — Confirmed: Post / Fail

1. Product Type	2. Product Density (lb/ft³)	3. Aged Solar Reflectance	4. Thermal Emittance	5. SRI	6. Cool Roof Credit	7. Roofing Product Description	Post	Fail
R-11 Roof Cathedral11	4.65104	0.08	0.75	NA	No	NA	☐	☐

CA Building Energy Efficiency Standards- 2016 Nonresidential Compliance — Report Version: NRCC-PRF-01-E-08082017-4377 — Report Generated at: 2017-10-02 07:59:50

Project Name:	Longfellow Elementary School - Building G	NRCC-PRF-01-E	Page 9 of 19
Project Address:	1101 S DWIGHT AVE. COMPTON 90220	Calculation Date/Time:	07:54, Mon, Oct 02, 2017
Compliance Scope:	Existing/Alteration	Input File Name:	2017-09-28 Longfellow ES BLDG. G - T-24.cbd16x

M. HVAC SYSTEM SUMMARY (use NRCC-PRF-MCH-DETAILS for more information) — § 110.1 / § 110.2

Dry System Equipment * Dryer & Economizer info included below in Table M]

1. Equip Name	2. Equip Type	3. System Type (Simple ¹ or Complex ²)	4. Qty	5. Total Heating Output (kBtu/h)	6. Equip Heat Source (Y/N)	7. Total Cooling Output (kBtu/h)	8. Efficiency Cooling	Heating	9. Acceptance Testing Required? (Y/N) *	10. Economizer	Post	Fail
Building G	PVAV (PackagedDXTerm)	Complex	1	518	No	0	110	EER-12.0	AFUE-85.0	Yes	N	☐	☐

¹ Dry System Equipment includes furnaces, air-handling units, limit arrows, etc.
² Simple (county must complete NRCC-CXR-02E covering design review form
³ Complex Systems must complete NRCC-CXR-04 E nonresidential design review form
* Acceptance Testing Required may be applicable in accordance to NRCC-PRF-MCH-DETAILS

Unit System Equipment Section Does Not Apply

Discrepancy between modeled and designed equipment sizing? (If "Yes", see Table G "Additional Remarks" for an explanation) — No

N. ECONOMIZER & FAN SYSTEMS SUMMARY* — § 140.4 — Confirmed: Post / Fail

1. Equip Name	2. Outside Air	3. Supply Fan CFM	3. Supply Fan HP	3. Supply Fan BHP	3. Supply Fan TSP (Inch WC)	3. Supply Fan Control	4. Return Fan CFM	4. Return Fan HP	4. Return Fan BHP	4. Return Fan TSP (Inch WC)	4. Return Fan Control	5. Economizer Type [if present]	Post	Fail
Building G	1060	3750	2.620	2.620	0.65	VariableSpeedDrive	NA	NA	NA	NA	NA	FixedDryBulb	☐	☐

* Mechanical ventilation calculations and exhaust fans are declared in the NRCC-PRF-MCH-DETAILS section

CA Building Energy Efficiency Standards- 2016 Nonresidential Compliance — Report Version: NRCC-PRF-01-E-08082017-4377 — Report Generated at: 2017-10-02 07:59:50

Project Name:	Longfellow Elementary School - Building G	NRCC-PRF-01-E	Page 10 of 19
Project Address:	1101 S DWIGHT AVE. COMPTON 90220	Calculation Date/Time:	07:54, Mon, Oct 02, 2017
Compliance Scope:	Existing/Alteration	Input File Name:	2017-09-28 Longfellow ES BLDG. G - T-24.cbd16x

O. EQUIPMENT CONTROLS — § 120.2 — Confirmed: Post / Fail

1. Equip Name	2. Equip Type	3. Controls	Post	Fail
Building G	PVAV	No DCV Controls, DCV Controls Fixed Drybulb Economizer Warmest Zone Supply Air Temp. Reset Optimum Start No Evaporative Cooler	☐	☐

P. SYSTEM DISTRIBUTION SUMMARY — § 120.4/ § 140.4[j]

Dry System Distribution							Confirmed: Post	Fail
1. Equip Name	2. Equip Type	3. Duct Leakage and Sealing Required per 140.4[l]	4. Duct Leakage will be verified per NA1 and NA2	5. Ducts: Insulation R-Value	Location			
Building G	PVAV	No	No	8	Unconditioned		☐	☐

Does the Project Include Zonal Systems? (If "Yes", see NRCC-PRF-MCH-DETAILS for system information)	No
Does the Project Include a Solar Hot Water System? (If "Yes", see NRCC-PRF-MCH-DETAILS for system information)	No
Multifamily or Hotel/ Motel Occupancy? (If "Yes", see NRCC-PRF-MCH-DETAILS for DHW system information)	No

Q. INDOOR CONDITIONED LIGHTING GENERAL INFO (use NRCC-PRF-LTI-DETAILS for more info)[f] — § 140.6 — Confirmed: Post / Fail

1. Occupancy Type 1*	2. Conditioned Floor Area ² (ft²)	3. Installed Lighting Power (Watts)	4. Lighting Control Credit: (Watts)	5. Additional (Custom) Allowance: Area Category Footnotes (Watts)	5. Additional (Custom) Allowance: Tailored Method (Watts)	Post	Fail
						☐	☐
Building Totals:				0	0		

* See Table 140-C
² Non-MCH CFA-E-Zero square-foot spaces :
³ Lighting adjustments for missing lighting controls credited if not installed in the table
⁴ Multiple entries for an Occupancy Type may be listed in the table as those items were aggregated for Building Totals for ease of review.

CA Building Energy Efficiency Standards- 2016 Nonresidential Compliance — Report Version: NRCC-PRF-01-E-08082017-4377 — Report Generated at: 2017-10-02 07:59:50

Project Name:	Longfellow Elementary School - Building G	NRCC-PRF-01-E	Page 11 of 19
Project Address:	1101 S DWIGHT AVE. COMPTON 90220	Calculation Date/Time:	07:54, Mon, Oct 02, 2017
Compliance Scope:	Existing/Alteration	Input File Name:	2017-09-28 Longfellow ES BLDG. G - T-24.cbd16x

R. INDOOR CONDITIONED LIGHTING SCHEDULE (Adopted from NRCI-LTI-01-E)[f] — § 130.0

This Section Does Not Apply

[f] Lighting power densities were used in the compliance model. Building Departments will need to check subsystem forms for Luminaire Schedule details.

S1. COVERED PROCESS SUMMARY – ENCLOSED PARKING GARAGES — § 140.9

This Section Does Not Apply

S2. COVERED PROCESS SUMMARY – COMMERCIAL KITCHENS — § 140.9

This Section Does Not Apply

S3. COVERED PROCESS SUMMARY – COMPUTER ROOMS — § 140.9

This Section Does Not Apply

S4. COVERED PROCESS SUMMARY – LABORATORY EXHAUSTS — § 140.9

This Section Does Not Apply.

T. UNMET LOAD HOURS

Thermal Zone Name	Cooling Unmet Load Hour Limit for Thermal Zone	Proposed Cooling Unmet Load Hours	Heating Unmet Load Hour Limit for Thermal Zone	Proposed Heating Unmet Load Hours
1-(VAV 1-6) Classroom 1060	150	0	150	2387.5
2-(VAV 2-6) Classroom 1070	150	0	150	257
3-(VAV 3-6) KinderGarden 10	150	0	150	320.25
4-(VAV 4-6) Speech Room 101	150	0	150	161.75

U. ENERGY USE SUMMARY

Energy Component	Standard Design Site (kWh)	Proposed Design Site (kWh)	Margin (kWh)	Standard Design Site (kBtu)	Proposed Design Site (kBtu)	Margin (kBtu)
Space Heating	--	--	--	6.0	14.3	-8.3
Space Cooling	6.5	3.3	3.2	--	--	--
Indoor Fans	11.5	2.2	9.3	--	--	--
Heat Rejection	--	--	--	--	--	--

CA Building Energy Efficiency Standards- 2016 Nonresidential Compliance — Report Version: NRCC-PRF-01-E-08082017-4377 — Report Generated at: 2017-10-02 07:59:50

Project Name:	Longfellow Elementary School - Building G	NRCC-PRF-01-E	Page 12 of 19
Project Address:	1101 S DWIGHT AVE. COMPTON 90220	Calculation Date/Time:	07:54, Mon, Oct 02, 2017
Compliance Scope:	Existing/Alteration	Input File Name:	2017-09-28 Longfellow ES BLDG. G - T-24.cbd16x

U. ENERGY USE SUMMARY

Energy Component	Standard Design Site (kWh)	Proposed Design Site (kWh)	Margin (kWh)	Standard Design Site (kBtu)	Proposed Design Site (kBtu)	Margin (kBtu)
Pumps & Misc.	--	--	--	--	--	--
Domestic Hot Water	--	--	--	26.2	24.2	0.0
Indoor Lighting	6.9	6.9	0.0	--	--	--
COMPLIANCE TOTAL	**24.0**	**12.4**	**12.1**	**32.2**	**38.5**	**-8.3**
Receptacle	7.5	2.5	0.0	--	--	--
Process	--	--	--	--	--	--
Other tbg	--	--	--	--	--	--
TOTAL	**32.0**	**19.9**	**12.1**	**32.2**	**38.5**	**-8.3**

CA Building Energy Efficiency Standards- 2016 Nonresidential Compliance — Report Version: NRCC-PRF-01-E-08082017-4377 — Report Generated at: 2017-10-02 07:59:50

Project Name:	Longfellow Elementary School - Building G	NRCC-PRF-01-E	Page 13 of 19
Project Address:	1101 S DWIGHT AVE. COMPTON 90220	Calculation Date/Time:	07:54, Mon, Oct 02, 2017
Compliance Scope:	Existing/Alteration	Input File Name:	2017-09-28 Longfellow ES BLDG. G - T-24.cbd16x

DOCUMENTATION AUTHOR'S DECLARATION STATEMENT — § 10-103

I certify that this Certificate of Compliance documentation is accurate and complete.

Documentation Author Name: Ankul Patel	
Company: Optimum Energy Design	Signature:
Address: 5200 East La Palma Avenue	Signature Date: 10/02/2017
City/State/Zip: Anaheim California 92807	CEA Identification (if applicable):
Phone: (714)699-2277	

RESPONSIBLE PERSON'S DECLARATION STATEMENT

I certify the following under penalty of perjury, under the laws of the State of California:

1	I hereby affirm that I am eligible under the provisions of Division 3 of the Business and Professions Code to sign this document as the person responsible for its preparation; and that I am licensed in the State of California as a civil engineer, mechanical engineer, electrical engineer, or I am a licensed architect.
2	I affirm that I am eligible under the provisions of Division 3 of the Business and Professions Code by section 5537.2 or 6737.2 to sign this document as the person responsible for its preparation; and that I am a licensed contractor performing this work.
3	I affirm that I am eligible under Section 5 of the Business and Professions Code to sign this document because it pertains to a structure or type of work described in exempt pursuant to Business and Professions Code Sections 5537, 5538 and 6737.1.

Responsible Envelope Designer Name:	Signature: NOT IN SCOPE
Company: Optimum Energy Design	
Address: 5200 East La Palma Avenue	Date Signed:
City/State/Zip: Anaheim California 92807	Declaration Statement Type:
Phone: (714) 699-2277	Title: License #:
Responsible Lighting Designer Name:	Signature: NOT IN SCOPE
Company:	
Address:	Date Signed:
City/State/Zip:	Declaration Statement Type:
Phone:	Title: License #:
Responsible Mechanical Designer Name: Abby Banerjee	Signature:
Company: Optimum Energy Design	
Address: 5200 East La Palma Avenue	Date Signed: 10/02/2017
City/State/Zip: Anaheim California 92807	Declaration Statement Type:
Phone: (714) 699-2277	Title: License #: M29253

CA Building Energy Efficiency Standards- 2016 Nonresidential Compliance — Report Version: NRCC-PRF-01-E-08082017-4377 — Report Generated at: 2017-10-02 07:59:50

Project Name:	Longfellow Elementary School - Building G	NRCC-PRF-01-E	Page 14 of 19
Project Address:	1101 S DWIGHT AVE. COMPTON 90220	Calculation Date/Time:	07:54, Mon, Oct 02, 2017
Compliance Scope:	Existing/Alteration	Input File Name:	2017-09-28 Longfellow ES BLDG. G - T-24.cbd16x

NRCC-PRF-ENV-DETAILS -SECTION START-

A. OPAQUE SURFACE ASSEMBLY DETAILS — Confirmed: Post / Fail

1. Surface Name	2. Surface Type	3. Description of Assembly Layers	4. Notes	Post	Fail
R-13 Wall4	ExteriorWall	Stucco - 7/8 in. Vapor permeable felt - 1/8 in. Wood framed wall, 16in. OC, 3.5in.; R-13 Gypsum Board - 1/2 in.		☐	☐
R-13 Roof Cathedral11	Roof	Asphalt Shingles - 1/4 in. Vapor permeable felt - 1/8 in. Plywood - 1/2 in. Air - Cavity - Wood Roof Cathedral - 4 in. or more Wood framed roof, 16in. OC, 3.5in., R-13 Gypsum Board - 1/2 in.		☐	☐
Slab On Grade13	UndergroundFloor	Slab Type = UnInsulatedSlabOnGrade Insulation Orientation = None Insulation R-Value = R0		☐	☐

B. OVERHANG DETAILS (Adopted from NRCC-ENV-02-E)

This Section Does Not Apply

C. OPAQUE DOOR SUMMARY — Confirmed: Pass / Fail

1. Opaque Door Assembly Name / Tag or I.D.	2. Door Type	3. Certification Method	4. Operation.	5. Area	6. Overall U-factor	7. Status[2]	Pass	Fail
Wood Door7	WoodGreaterThanOrEqual61.75inThickDoor	Default Performance	Swinging	210	0.500	E	☐	☐

[2] Status: R - New, A – Altered, E – Existing

CA Building Energy Efficiency Standards- 2016 Nonresidential Compliance — Report Version: NRCC-PRF-01-E-08082017-4377 — Report Generated at: 2017-10-02 07:59:50

Project Name:	Longfellow Elementary School - Building G	NRCC-PRF-01-E	Page 15 of 19
Project Address:	1101 S DWIGHT AVE. COMPTON 90220	Calculation Date/Time:	07:54, Mon, Oct 02, 2017
Compliance Scope:	Existing/Alteration	Input File Name:	2017-09-28 Longfellow ES BLDG. G - T-24.cbd16x

NRCC-PRF-MCH-DETAILS -SECTION START-

A. MECHANICAL VENTILATION AND REHEAT *(Adopted from 2016-NRCC-MCH-03-E)* — Confir

Project Name:	Longfellow Elementary School - Building K	NRCC-PRF-01-E	Page 3 of 19
Project Address:	1101 S DWIGHT AVE. COMPTON 90220	Calculation Date/Time:	08:04, Mon, Oct 02, 2017
Compliance Scope:	Existing/Alteration	Input File Name:	2017-10-02 Longfellow ES BLDG. K - T-24.cbd16x

C. PRIORITY PLAN CHECK/ INSPECTION ITEMS (in-order of highest to lowest TDV energy savings)

1st	Indoor Fans: Check envelope and mechanical
2nd	Heat Rejection: Check envelope and mechanical
3rd	Pumps & Misc.: Check mechanical
4th	Domestic Hot Water: Check mechanical
5th	Indoor Lighting: Check lighting
6th	Space Cooling: Check envelope and mechanical
7th	Space Heating: Check envelope and mechanical

Compliance Margin By Energy Component (from Table 4 column 4)

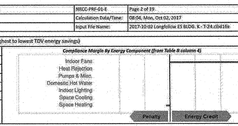

D. EXCEPTIONAL CONDITIONS

The building does not include service water heating. Verify that service water heating is not required and is not included in the design.

E. HERS VERIFICATION

This Section Does Not Apply

F. ADDITIONAL REMARKS

None Provided

CA Building Energy Efficiency Standards- 2016 Nonresidential Compliance | Report Version: NRCC-PRF-01-E-08082017-4377 | Report Generated at: 2017-10-02 08:10:53

Project Name:	Longfellow Elementary School - Building K	NRCC-PRF-01-E	Page 4 of 19
Project Address:	1101 S DWIGHT AVE. COMPTON 90220	Calculation Date/Time:	08:04, Mon, Oct 02, 2017
Compliance Scope:	Existing/Alteration	Input File Name:	2017-10-02 Longfellow ES BLDG. K - T-24.cbd16x

G. COMPLIANCE PATH & CERTIFICATE OF COMPLIANCE SUMMARY

Identify which building components use the performance or prescriptive path for compliance. "N/A" is not in project. For components that utilize the performance path, indicate the short-number that includes mandatory notes on plans.

Building Component	Compliance Path		Compliance Forms *(required for submittal)*	Location of Mandatory Notes on Plans
Envelope	☐	Performance	NRCC-PRF-ENV-DETAILS (section of the NRCC-PRF-01-E)	
	☐	Prescriptive	NRCC-ENV-01 / 02 / 03 / 04 / 05 / 06-E	
	☒	N/A		
Mechanical	☒	Performance	NRCC-PRF-MCH-DETAILS (section of the NRCC-PRF-01-E)	
	☐	Prescriptive	NRCC-MCH-01 / 02 / 03 / 04 / 05 / 06 / 07-E	
	☐	N/A		
Domestic Hot Water	☐	Performance	NRCC-PRF-PLB-DETAILS (section of the NRCC-PRF-01-E)	
	☐	Prescriptive	NRCC-PLB-05-E	
	☒	N/A		
Lighting (Indoor/Conditioned)	☒	Performance	NRCC-PRF-LTI-DETAILS (section of this NRCC-PRF-01-E)	
	☐	Prescriptive	NRCC-LTI-01E / 02 / 03 / 04 / 05-E	
	☒	N/A		
Covered Process: Commercial Kitchens	☐	Performance	12 (section of the NRCC-PRF-01-E)	
	☐	Prescriptive	NRCC-PRC-02-E	
	☒	N/A		
Covered Process: Computer Rooms	☐	Performance	13 (section of the NRCC-PRF-01-E)	
	☐	Prescriptive	NRCC-PRC-01-E	
	☒	N/A		
Covered Process: Laboratory Exhaust	☐	Performance	14 (section of the NRCC-PRF-01-E)	
	☐	Prescriptive	NRCC-PRC-03-E	
	☒	N/A		

CA Building Energy Efficiency Standards- 2016 Nonresidential Compliance | Report Version: NRCC-PRF-01-E-08082017-4377 | Report Generated at: 2017-10-02 08:10:53

Project Name:	Longfellow Elementary School - Building K	NRCC-PRF-01-E	Page 5 of 19
Project Address:	1101 S DWIGHT AVE. COMPTON 90220	Calculation Date/Time:	08:04, Mon, Oct 02, 2017
Compliance Scope:	Existing/Alteration	Input File Name:	2017-10-02 Longfellow ES BLDG. K - T-24.cbd16x

H. CERTIFICATE OF INSTALLATION, CERTIFICATE OF ACCEPTANCE & CERTIFICATE OF VERIFICATION SUMMARY (NRCI/NRCA/NRCV) –
Documentation Author to indicate which Certificates must be submitted for the features to be recognized for compliance (Retain copies and verify forms are completed and signed to post in field for Field Inspector to verify).
See Tables G, and H. in MCH and LTI Details Sections for Acceptance Tests and forms by equipment.

Confirmed

Building Component	Compliance Forms *(required for submittal)*	Pass	Fail
Envelope	☐ NRCI-ENV-01-E *for all buildings*	☐	☐
	☐ NRCA-ENV-02-E - NFRC label verification for fenestration	☐	☐
	☒ NRCI-ENV-03-E - For all buildings with Mechanical Systems:	☐	☐
	☒ NRCA-MCH-02-A: *Outdoor Air*	☐	☐
	☐ NRCA-MCH-03-A – *Constant Volume Single Zone HVAC*	☐	☐
	☐ NRCA-MCH-04-A- Air Distribution Duct Leakage	☐	☐
	☒ NRCA-MCH-05-A- Air Economizer Controls	☐	☐
	☐ NRCA-MCH-06-A- Demand Control Ventilation	☐	☐
	☒ NRCA-MCH-07A.- Supply Fan Variable Flow Controls	☐	☐
	☐ NRCA-MCH-08-A- Valve Leakage Test	☐	☐
	☐ NRCA-MCH-09A.– Supply Water Temp Reset Controls	☐	☐
	☐ NRCA-MCH-10-A- Hydronic System Variable Flow Controls	☐	☐
	☒ NRCA-MCH-11-A. – Auto Demand Shed Controls	☐	☐
	☐ NRCA-MCH-12-A- Packaged Direct Expansion Units	☐	☐
	☐ NRCA-MCH-13-A- Air Handling Units and Zone Terminal Units	☐	☐
	☐ NRCA-MCH-14-A- Distributed Energy Storage	☐	☐
	☐ NRCA-MCH-15-A – Thermal Energy Storage	☐	☐
	☒ NRCA-MCH-16.A- Supply Air Temp Reset Controls	☐	☐
	☐ NRCA-MCH-17-A – Condenscate Water Temp Reset Controls	☐	☐
	☐ NRCA-MCH-18-A- Energy Management Controls Systems	☐	☐
	☐ NRCV-MCH-04-H- Duct Leakage Test	☐	☐

CA Building Energy Efficiency Standards- 2016 Nonresidential Compliance | Report Version: NRCC-PRF-01-E-08082017-4377 | Report Generated at: 2017-10-02 08:10:53

Project Name:	Longfellow Elementary School - Building K	NRCC-PRF-01-E	Page 6 of 19
Project Address:	1101 S DWIGHT AVE. COMPTON 90220	Calculation Date/Time:	08:04, Mon, Oct 02, 2017
Compliance Scope:	Existing/Alteration	Input File Name:	2017-10-02 Longfellow ES BLDG. K - T-24.cbd16x

H. CERTIFICATE OF INSTALLATION, CERTIFICATE OF ACCEPTANCE & CERTIFICATE OF VERIFICATION SUMMARY (NRCI/NRCA/NRCV) –
Documentation Author to indicate which Certificates must be submitted for the features to be recognized for compliance (Retain copies and verify forms are completed and signed to post in field for Field Inspector to verify).
See Tables G, and H. in MCH and LTI Details Sections for Acceptance Tests and forms by equipment.

Confirmed

Building Component	Compliance Forms *(required for submittal)*	Pass	Fail
Plumbing	☐ NRCI-PRC-01-E Refrigerated Warehouse.	☐	☐
	☐ NRCA-PRC-01-E- *Compressed Air Systems*	☐	☐
	☐ NRCA-PRC-03-E- Kitchen Exhood:	☐	☐
	☐ NRCA-PRC-04-E- Garage Exhaust:	☐	☐
	☐ NRCA-PRC-04-F- Refrigerated Warehouse- Evaporator Fan Motor Controls	☐	☐
	☐ NRCA-PRC-05-F- Refrigerated Warehouse- Evaporative Condenser Controls	☐	☐
	☐ NRCA-PRC-06-F- Refrigerated Warehouse- Air Cooled Condenser Controls	☐	☐
	☐ NRCA-PRC-07E- Refrigerated Warehouse- Variable Speed Compressor.	☐	☐
	☐ NRCA-PRC-08-F- Electrical Resistance Underslab Heating System:	☐	☐

CA Building Energy Efficiency Standards- 2016 Nonresidential Compliance | Report Version: NRCC-PRF-01-E-08082017-4377 | Report Generated at: 2017-10-02 08:10:53

Project Name:	Longfellow Elementary School - Building K	NRCC-PRF-01-E	Page 7 of 19
Project Address:	1101 S DWIGHT AVE. COMPTON 90220	Calculation Date/Time:	08:04, Mon, Oct 02, 2017
Compliance Scope:	Existing/Alteration	Input File Name:	2017-10-02 Longfellow ES BLDG. K - T-24.cbd16x

I. ENVELOPE GENERAL INFORMATION (See NRCC-PRF-ENV-DETAILS for more information)

						Confirmed	
1.	Total Conditioned Floor Area :	5,194 ft²	4.	Number of Floors Above Grade	1		
2.	Total Unconditioned Floor Area	768 ft²	5.	Number of Floors Below Grade	0		
3.	Addition Conditioned Floor Area	0 ft²				Pass	Fail
4.	Addition Unconditioned Floor Area	0 ft²					

7. Opaques Surfaces & Orientation	8. Total Gross Surface Area	9. Total Fenestration Area	10. Window to Wall Ratio	Confirmed Pass	Confirmed Fail
North Wall	1,059 ft²	111 ft²	10.5%	☐	☐
East Wall	1,939 ft²	150 ft²	07.8%	☐	☐
South Wall	1,059 ft²	30 ft²	02.8%	☐	☐
West Wall	968 ft²	0 ft²	00.0%	☐	☐
Total	4,933 ft²	293 ft²	05.9%	☐	☐
Roof	3,394 ft²	0 ft²	00.0%	☐	☐

CA Building Energy Efficiency Standards- 2016 Nonresidential Compliance | Report Version: NRCC-PRF-01-E-08082017-4377 | Report Generated at: 2017-10-02 08:10:53

Project Name:	Longfellow Elementary School - Building K	NRCC-PRF-01-E	Page 8 of 19
Project Address:	1101 S DWIGHT AVE. COMPTON 90220	Calculation Date/Time:	08:04, Mon, Oct 02, 2017
Compliance Scope:	Existing/Alteration	Input File Name:	2017-10-02 Longfellow ES BLDG. K - T-24.cbd16x

J. FENESTRATION ASSEMBLY SUMMARY — § 110.6

1. Fenestration Assembly Name / Tag or I.D.	2. Fenestration Type / Product Type / Frame Type	3. Certification Method*	4. Assembly Method	5. Area ft²	6. Overall U-factor	7. Overall SHGC	8. Overall VT	Confirmed Pass	Confirmed Fail
Single Metal Clear	Vertical/Fenestration Fixed/Window Metal/Framing	Default Performance	Slidebolt	325	1.19	0.83	0.77	☐	☐

*Newly installed fenestration shall have a certified NFRC certificate or use the CEC default table found in Table 110.6-A and Table 110.6-B. Energy-Efficiency (EER) values are for the glass only, determined by the manufacturer, but are shown for ease of enforcement. Use default assumptions when not calculated per recommended Appendix NA6 and site-built fen NA analysis.

† Frames: M = Metal, W = Wood, V = Vinyl/Clad

Taking compliance credit for fenestration shading devices? (If "Yes", see NRCC-PRF-ENV-DETAILS for more information)	No

K. OPAQUE SURFACE ASSEMBLY SUMMARY — § 120.7/ § 140.3

1. Surface Name	2. Surface Type	Area (ft²)	3. Framing Type	4. Cavity R-Value	5. Continuous R-Value	6. U-factor / F-Factor / C-Factor	Confirmed Pass	Confirmed Fail
R-22 Wall4	Exterior Wall	1892	Wood	19	NA	U-Factor: 0.112	☐	☐
R-13 Roof Cathedral1E	Roof	4159	Wood	13	NA	U-Factor: 0.067	☐	☐
Slab On Grade14	Underground Floor	4159	NA	0	NA	F-Factor: 0.730	☐	☐
R-13 Wall41	Interior Wall	356	Wood	13	NA	U-Factor: 0.093	☐	☐

† Frames: M = Metal, W = Wood, V = Vinyl/Clad

L. ROOFING PRODUCT SUMMARY — § 140.3

1. Product Type	2. Product Density (lb/ft³)	3. Aged Solar Reflectance	4. Thermal Emittance	5. SRI	6. Cool Roof Credit	7. Roofing Product Description	Confirmed Pass	Confirmed Fail
R-13 Roof Cathedral13	4.00124	0.08	0.75	NA	No	NA	☐	☐

CA Building Energy Efficiency Standards- 2016 Nonresidential Compliance | Report Version: NRCC-PRF-01-E-08082017-4377 | Report Generated at: 2017-10-02 08:10:53

Project Name:	Longfellow Elementary School - Building K	NRCC-PRF-01-E	Page 9 of 19
Project Address:	1101 S DWIGHT AVE. COMPTON 90220	Calculation Date/Time:	08:04, Mon, Oct 02, 2017
Compliance Scope:	Existing/Alteration	Input File Name:	2017-10-02 Longfellow ES BLDG. K - T-24.cbd16x

M. HVAC SYSTEM SUMMARY (see NRCC-PRF-MCH-DETAILS for more information) — § 110.1 / § 110.2

Dry System Equipment * (Fan & Economizer info included below in Table M)

1. Equip Name	2. Equip Type	3. System Type (Simple or Complex*)	4. Qty	5. Total Heating Output (kBtu/h)	6. Supp Heat Source (Y/N)	7. Supp Heat Output (kBtu/h)	8. Total Cooling Output (kBtu/h)	9. Efficiency: Cooling	9. Efficiency: Heating	10. Acceptance Testing Required? (Y/N) +	11. Confirmed: Pass	11. Confirmed: Fail
Building K	PUHV (Parlor.split3Three)	Complex	1	142	No	0	195	EER-12.0	AFUE-81.0	Yes	☐	☐

† Dry-System Equipment includes furnaces, air handling units, fan-coil units, etc.
‡ Simple Systems must complete NRCA-MCH-03-A if cooling capacity is greater than or equal to 54,000 Btu/h.
* Complex Systems must complete NRCA-MCH-04 if constructed using sealed ceiling plenums.
+ Testing is required for all equipment types applicable as provided in NRCC-PRF-MCH-DETAILS
^ Values: N = None, A = Advanced, C = Conventional

Wall System Equipment Section Does Not Apply	
Discrepancy between modelled and designed equipment sizing? (If "Yes", see Table F: "Additional Remarks" for an explanation)	No

N. ECONOMIZER & FAN SYSTEMS SUMMARY* — § 140.4

1. Equip Name	2. Supply Fan: Outside Air	2. Supply Fan: CFM	2. Supply Fan: FHP	2. Supply Fan: BHP	2. Supply Fan: TSP (Inch WC)	2. Supply Fan: Control	3. Return Fan: CFM	3. Return Fan: FHP	3. Return Fan: BHP	3. Return Fan: TSP (Inch WC)	3. Return Fan: Control	4. Economizer Type (if present)	Confirmed: Pass	Confirmed: Fail
Building K	1275	6575	7.500	7.942	4.00	VariableSpeedDrive	NA	NA	NA	NA	NA	FixedDrybulb	☐	☐

* Mechanical ventilation calculations and exhaust fans are included in the NRCC-PRF-MCH-DETAILS section

CA Building Energy Efficiency Standards- 2016 Nonresidential Compliance | Report Version: NRCC-PRF-01-E-08082017-4377 | Report Generated at: 2017-10-02 08:10:53

Project Name:	Longfellow Elementary School - Building K	NRCC-PRF-01-E	Page 10 of 19
Project Address:	1101 S DWIGHT AVE. COMPTON 90220	Calculation Date/Time:	08:04, Mon, Oct 02, 2017
Compliance Scope:	Existing/Alteration	Input File Name:	2017-10-02 Longfellow ES BLDG. K - T-24.cbd16x

O. EQUIPMENT CONTROLS — § 120.2

1. Equip Name	2. Equip Type	3. Controls	Confirmed: Pass	Confirmed: Fail
Building K	PUHV	No DCV Controls; DDC Controls Fixed Drybulb Economizer Warmest Zone-Supply Air Temp. Reset Optimum Start No Evaporative Cooler	☐	☐

P. SYSTEM DISTRIBUTION SUMMARY — § 120.4/ § 140.4(l)

		Dry System Distribution				Confirmed	
1.	2.	3.	4.			Pass	Fail
Equip Name	Equip Type	Duct Leakage and Sealing Required per 140.4(l)	Duct Leakage will be verified per 6A1 and 5A2	Duct Insulation: Insulation R-Value	Location		
Building K	PUHV	No	No	0	Unconditioned	☐	☐

Does the Project include Zonal Systems? (If "Yes", see NRCC-PRF-MCH-DETAILS for system information)	No
Does the Project include a Solar Ready Buffer? (If "Yes", see NRCC-PRF-MCH-DETAILS for system information)	No
Multifamily or Hotel/ Motel Occupancy? (If "Yes", see NRCC-PRF-MCH-DETAILS for DHW system information)	No

Q. INDOOR CONDITIONED LIGHTING GENERAL INFO (see NRCC-PRF-LTI-DETAILS for more info)* — § 140.6

1. Occupancy Type**	2. Conditioned Floor Area † (ft²)	3. Installed Lighting Power (Watts)	4. Lighting Control Credits (Watts)	5. Additional (Custom) Allowance: Area Category Footnotes (Watts)	5. Additional (Custom) Allowance: Tailored Method (Watts)	Confirmed: Pass	Confirmed: Fail
						☐	☐
Building Totals:			0	0	0		

* For Table 140.6-C
** See NRCC-PRF-01-E for space-conditioned spaces :
† Lighting adjustments for walking surface lighting are not included in the table
‡ Multiple zones for an Occupancy Type may not be tallied on the table as the total floor area appropriate for Building Stories that have five-zone floor multipliers

CA Building Energy Efficiency Standards- 2016 Nonresidential Compliance | Report Version: NRCC-PRF-01-E-08082017-4377 | Report Generated at: 2017-10-02 08:10:53

Project Name:	Longfellow Elementary School - Building K	NRCC-PRF-01-E	Page 11 of 19
Project Address:	1101 S DWIGHT AVE. COMPTON 90220	Calculation Date/Time:	08:04, Mon, Oct 02, 2017
Compliance Scope:	Existing/Alteration	Input File Name:	2017-10-02 Longfellow ES BLDG. K - T-24.cbd16x

R. INDOOR CONDITIONED LIGHTING SCHEDULE (Adapted from NRCC-LTI-01-E)* — § 130.0

This Section Does Not Apply

*If lighting power densities were used in the compliance model Building Inspectors will need to check prescriptive forms for luminaire Schedule details.

S1. COVERED PROCESS SUMMARY – ENCLOSED PARKING GARAGES — § 140.9

This Section Does Not Apply

S2. COVERED PROCESS SUMMARY – COMMERCIAL KITCHENS — § 140.9

This Section Does Not Apply

S3. COVERED PROCESS SUMMARY – COMPUTER ROOMS — § 140.9

This Section Does Not Apply

S4. COVERED PROCESS SUMMARY – LABORATORY EXHAUSTS — § 140.9

This Section Does Not Apply

T. UNMET LOAD HOURS

Thermal Zone Name	Cooling Unmet Load Hour Limit for Thermal Zone	Proposed Cooling Unmet Load Hours	Heating Unmet Load Hour Limit for Thermal Zone	Proposed Heating Unmet Load Hours
1-(UNI 1-K) KinderGarten 11	150	0	150	154.25
2-(UNI 2-K) KinderGarten CL	150	0	150	208.5
3-(UNI 3-K) KinderGarten 10	150	0	150	244.25

U. ENERGY USE SUMMARY

Energy Component	Standard Design Site (MWh)	Proposed Design Site (MWh)	Margin (MWh)	Standard Design Site (MBtu)	Proposed Design Site (MBtu)	Margin (MBtu)
Space Heating	—	—	—	6.4	15.3	-8.9
Space Cooling	6.3	6.5	-0.2	—	—	—
Indoor Fans	17.6	8.3	13.3	—	—	—
Heat Rejection	—	—	—	—	—	—
Pumps & Misc.	—	—	—	—	—	—

CA Building Energy Efficiency Standards- 2016 Nonresidential Compliance | Report Version: NRCC-PRF-01-E-08082017-4377 | Report Generated at: 2017-10-02 08:10:53

Project Name:	Longfellow Elementary School - Building K	NRCC-PRF-01-E	Page 12 of 19
Project Address:	1101 S DWIGHT AVE. COMPTON 90220	Calculation Date/Time:	08:04, Mon, Oct 02, 2017
Compliance Scope:	Existing/Alteration	Input File Name:	2017-10-02 Longfellow ES BLDG. K - T-24.cbd16x

U. ENERGY USE SUMMARY

Energy Component	Standard Design Site (kWh)	Proposed Design Site (kWh)	Margin (kWh)	Standard Design Site (MBtu)	Proposed Design Site (MBtu)	Margin (MBtu)
Domestic Hot Water	—	—	—	17.5	17.3	0.0
Indoor Lighting	8.3	8.3	0.0	—	—	—
COMPLIANCE TOTAL	31.2	18.7	13.5	35.7	42.6	-8.9
Receptacle	9.0	9.0	0.0	—	—	—
Process	—	—	—	—	—	—
Other Ltg	—	—	—	—	—	—
TOTAL	41.3	27.7	13.5	35.7	42.6	-8.9

CA Building Energy Efficiency Standards- 2016 Nonresidential Compliance | Report Version: NRCC-PRF-01-E-08082017-4377 | Report Generated at: 2017-10-02 08:10:53

Project Name:	Longfellow Elementary School - Building K	NRCC-PRF-01-E	Page 13 of 19
Project Address:	1101 S DWIGHT AVE. COMPTON 90220	Calculation Date/Time:	08:04, Mon, Oct 02, 2017
Compliance Scope:	Existing/Alteration	Input File Name:	2017-10-02 Longfellow ES BLDG. K - T-24.cbd16x

DOCUMENTATION AUTHOR'S DECLARATION STATEMENT — § 10-103

I certify that this Certificate of Compliance documentation is accurate and complete.

Documentation Author Name: Jaisal Patel	Signature:
Company: Optimum Energy Design	Signature Date: 10/02/2017
Address: 5200 East La Palma Avenue	CEA/ Verification ID (if applicable):
City/State/Zip: Anaheim California 92807	
Phone: (714)693-2277	

RESPONSIBLE PERSON'S DECLARATION STATEMENT

I certify the following under penalty of perjury, under the laws of the State of California:

1	I hereby affirm that I am eligible under the provisions of Division 3 of the Business and Professions Code to sign this document as the person responsible for its preparation; and that I am licensed in the State of California as a civil engineer, mechanical engineer, electrical engineer, or I am a licensed architect.
2	I affirm that I am eligible under the provisions of Division 3 of the Business and Professions Code by section 5537.2 or 6737.3 to sign this document as the person responsible for its preparation; and that I am a licensed contractor performing this work.
3	I affirm that I am eligible under Division 3 of the Business and Professions Code or sign this document because it pertains to a structure or type of work described as exempt pursuant to Business and Professions Code Sections 5537, 5538 and 6737.1.

Responsible Envelope Designer Name:	Signature: NOT IN SCOPE
Company: Optimum Energy Design	Date Signed:
Address: 5200 East La Palma Avenue	Declaration Statement Type:
City/State/Zip: Anaheim California 92807	Title: License #:
Phone: (714) 693-2277	
Responsible Lighting Designer Name:	Signature: NOT IN SCOPE
Company:	Date Signed:
Address:	Declaration Statement Type:
City/State/Zip:	Title: License #:
Responsible Mechanical Designer Name: Abby Banerjee	Signature:
Company: Optimum Energy Design	Date Signed: 10/02/2017
Address: 5200 East La Palma Avenue	Declaration Statement Type:
City/State/Zip: Anaheim California 92807	Title: License #: M29253
Phone: (714) 693-2277	

CA Building Energy Efficiency Standards- 2016 Nonresidential Compliance | Report Version: NRCC-PRF-01-E-08082017-4377 | Report Generated at: 2017-10-02 08:10:53

Project Name:	Longfellow Elementary School - Building K	NRCC-PRF-01-E	Page 14 of 19
Project Address:	1101 S DWIGHT AVE. COMPTON 90220	Calculation Date/Time:	08:04, Mon, Oct 02, 2017
Compliance Scope:	Existing/Alteration	Input File Name:	2017-10-02 Longfellow ES BLDG. K - T-24.cbd16x

NRCC-PRF-ENV-DETAILS -SECTION START-

A. OPAQUE SURFACE ASSEMBLY DETAILS

1. Surface Name	2. Surface Type	3. Description of Assembly Layers	4. Notes	Confirmed: Pass	Confirmed: Fail
R-13 Wall4	Exterior Wall	Stucco - 7/8 in. Vapor permeable felt - 3/8 in. Wood framed wall, 16in. OC, 3.5in.; R-13 Exposed Batt - 1/2 in.		☐	☐
R-13 Roof Cathedral02	Roof	Asphalt shingles - 1/4 in. Vapor permeable felt - 1/8 in. Plywood - 1/2 in. Air - Cavity - Wall Roof Ceiling - 4 in. or more Wood framed roof, 16in. OC, 5.5in.; R-13 Exposed Batt - 1/2 in.		☐	☐
Slab On Grade14	Underground Floor	Slab Type = UnheatedSlabOnGrade Insulation Orientation = None Insulation R-Value = R0		☐	☐
R-13 Wall41	Interior Wall	Stucco - 7/8 in. Vapor permeable felt - 3/8 in. Wood framed wall, 16in. OC, 3.5in.; R-13 Exposed Batt - 1/2 in.		☐	☐

B. OVERHANG DETAILS (Adapted from NRCC-ENV-02-E)

This Section Does Not Apply.

C. OPAQUE DOOR SUMMARY — Confirmed

1. Opaque Door Assembly Name / Tag or I.D.	2. Door Type	3. Certification Method	4. Operation	5. Area	6. Overall U-factor	7. Status†	Pass	Fail
Wood Door2	WoodAlmostHalfGlassWithLT50PctGlass	DefaultPerformance	Swinging	108	0.560	E	☐	☐

† Status: N = New, E = Altered, C = Existing

CA Building Energy Efficiency Standards- 2016 Nonresidential Compliance | Report Version: NRCC-PRF-01-E-08082017-4377 | Report Generated at: 2017-10-02 08:10:53

Project Name:	Longfellow Elementary School - Building K	NRCC-PRF-01-E	Page 15 of 19
Project Address:	1101 S DWIGHT AVE. COMPTON 90220	Calculation Date/Time:	08:04, Mon, Oct 02, 2017
Compliance Scope:	Existing/Alteration	Input File Name:	2017-10-02 Longfellow ES BLDG. K - T-24.cbd16x

NRCC-PRF-MCH-DETAILS -SECTION START-

A. MECHANICAL VENTILATION AND REHEAT *(Adapted from 2016-NRCC-MCH-03-E)* — Confirmed

1. DESIGN AIR FLOWS												2. VENTILATION (§ 120.1)												Confirmed	
CONDITIONED ZONE NAME	ID	DESIGN SPACE OCCUPANCY	DESIGN AIR FLOW	MINIMUM OUTDOOR AIR FLOW	MINIMUM EXHAUST AIR FLOW	MINIMUM RECIRCULATION AIR FLOW	MINIMUM OUTDOOR AIR FRACTION	MINIMUM SUPPLY AIR TEMPERATURE	MAXIMUM SUPPLY AIR TEMPERATURE	MAXIMUM ZONE AIR TEMPERATURE	DESIGN HEATING LOAD	VENT SYSTEM ID	OCCUPANCY TYPE	AREA	PEOPLE	OUTDOOR AIR RATE	MIN. OUTDOOR AIR FLOW	MIN. EXHAUST AIR FLOW	MIN. RECIRCULATION AIR FLOW	MIN. OUTDOOR AIR FRACTION	DESIGN SUPPLY AIR TEMP	DESIGN ZONE AIR TEMP	TRANSFER AIR	OCCUPANT DIVERSITY	Controls & Minimum Stops (see § 140.1 and 140.2(b)1)	Pass	Fail
1-(UNI 1-K) KinderGarten 11	Building K	2,000	400	0.20	NA	NA	Y	Building K	1,058	NA	25	15.0	981	281	NA	N	NA								☐	☐
2-(UNI 2-K) KinderGarten CL	Building K	2,800	560	0.20	NA	NA	Y	Building K	1,363	NA	34	15.0	511	511	NA	N	NA								☐	☐
3-(UNI 3-K) KinderGarten 10	Building K	3,200	400	0.16	NA	NA	Y	Building K	1,036	NA	25	15.0	381	381	NA	N	NA								☐	☐
								TOTAL	4,162			NA		NA	NA										☐	☐

B. ZONAL SYSTEM AND TERMINAL UNIT SUMMARY — § 140.4

1. System ID	2. System Type	3. Qty	4. Rated Capacity (kBtu/h) Heating	4. Rated Capacity (kBtu/h) Cooling	5. Economizer	6. Zone Name	7. Airflow (cfm) Design	7. Airflow (cfm) Min. Ratio	8. Fan BHP	8. Fan Cyclics	8. Fan ECM Motor	Confirmed: Pass	Confirmed: Fail
3-(UNI 3-K) KinderGarten 10-Trm	VAVReheatNoMax	1	NA	NA	NA	3-(UNI 3-K) KinderGarten 10	2000	400	0.29	NA	NA	☐	☐
2-(UNI 2-K) KinderGarten CL-Trm	VAVReheatNoMax	1	NA	NA	NA	2-(UNI 2-K) KinderGarten CL	2800	560	0.29	NA	NA	☐	☐
1-(UNI 1-K) KinderGarten 11-Trm	VAVReheatNoMax	1	NA	NA	NA	1-(UNI 1-K) KinderGarten 11	2000	400	0.29	NA	NA	☐	☐

CA Building Energy Efficiency Standards- 2016 Nonresidential Compliance | Report Version: NRCC-PRF-01-E-08082017-4377 | Report Generated at: 2017-10-02 08:10:53

Project Name:	Longfellow Elementary School - Building K	NRCC-PRF-01-E	Page 16 of 19
Project Address:	1101 S DWIGHT AVE. COMPTON 90220	Calculation Date/Time:	08:04, Mon, Oct 02, 2017
Compliance Scope:	Existing/Alteration	Input File Name:	2017-10-02 Longfellow ES BLDG. K - T-24.cbd16x

C. EXHAUST FAN SUMMARY

This Section Does Not Apply

D. DHW EQUIPMENT SUMMARY – *(Adapted from NRCC-PLB-01)*

This Section Does Not Apply

E. MULTI-FAMILY CENTRAL DHW SYSTEM DETAILS

This Section Does Not Apply

F. SOLAR HOT WATER HEATING SUMMARY (Adapted from NRCC-STH-01)

This Section Does Not Apply

G. MECHANICAL HVAC ACCEPTANCE TESTS & FORMS *(Adapted from 2016-NRCC-MCH-01-E)* — § RA4

Declaration of Required Acceptance Certificates (NRCA) – Acceptance Certificates that may be submitted. (Retain copies and verify forms are completed and signed to post in field for Field Inspector to verify).

Test Description	NRCA-MCH-02-A	NRCA-MCH-03-A	NRCA-MCH-04-A	NRCA-MCH-05-A	NRCA-MCH-06-A	NRCA-MCH-07-A	NRCA-MCH-08-A	NRCA-MCH-09-A	NRCA-MCH-10-A	NRCA-MCH-11-A	NRCA-MCH-12-A	NRCA-MCH-13-A	NRCA-MCH-14-A	NRCA-MCH-15-A	NRCA-MCH-16-A	NRCA-MCH-17-A	NRCA-MCH-18-A	Confirmed: Pass	Confirmed: Fail
Equipment Requiring Testing or Verification	Outdoor Air	Single Zone Systems	Air Duct Leaks	Economizer Controls	DCV	Variable Flow Systems	Valve Leakage	Supply Water Temp Reset	Hydronic Variable Flow Control	Auto Demand Shed Controls	Packaged DX Units	Air Handling Units and Zone Terminal Units	Distributed Energy Storage	Thermal Energy Storage	Supply Air Temp Reset Controls	Condenser Water Temp Reset Controls	Energy Management Control Systems		
Nonhydronic Heating/Cooling Systems	—	—	—	—	—	—	—	—	—	—	—	—	—	—	—	—	—	☐	☐
Building K	X	—	—	X	—	X	—	—	—	—	—	X	—	—	—	—	—	☐	☐

H. EVAPORATIVE COOLER SUMMARY

This Section Does Not Apply

CA Building Energy Efficiency Standards- 2016 Nonresidential Compliance | Report Version: NRCC-PRF

GENERAL NOTES

1. THIS CONTRACTOR SHALL SUPPLY POWER TO AND MAKE CONNECTION TO ALL MOTORS AND EQUIPMENT REQUIRING ELECTRICAL CONNECTIONS AS SHOWN ON THE MECHANICAL AND PLUMBING DRAWINGS, INCLUDING ALL FRACTIONAL HORSEPOWER MOTORS. IT SHALL BE THE RESPONSIBILITY OF THE CONTRACTOR TO REVIEW THE MECHANICAL AND PLUMBING DRAWINGS FOR DUCTS, LINES AND EQUIPMENT.

2. ALL COMMUNICATIONS WORK SHALL BE COORDINATED WITH THE COMMUNICATION SYSTEMS EQUIPMENT MANUFACTURER AND THE SCHOOL DISTRICT MAINTENANCE DEPARTMENT PRIOR TO ROUGH -IN AND INSTALLATION OF ANY AND ALL COMMUNICATION SYSTEM DEVICES AND RELATED CONDUIT AND WIRE.

3. THE CONTRACTOR SHALL SECURE AND PAY FOR PERMITS AND FEES NECESSARY FOR EXECUTION AND COMPLETION OF ELECTRICAL WORK, INCLUDING ALL CHARGES BY THE LOCAL GOVERNMENT AGENCIES AND THE UTILITY COMPANIES.

4. UNLESS OTHERWISE NOTED, MOUNTING HEIGHTS INDICATED ON ELECTRICAL OUTLETS ARE FROM FINISHED FLOOR TO CENTER OF OUTLETS.

5. NO CONDUIT SHALL BE RUN HORIZONTALLY IN CONCRETE FLOOR SLABS.

6. ALL FINAL CONNECTIONS TO OWNER-FURNISHED EQUIPMENT SHALL BE MADE BY THIS CONTRACTOR.

7. MEP COMPONENT ANCHORAGE NOTE

ALL MECHANICAL, PLUMBING, AND ELECTRICAL COMPONENTS SHALL BE ANCHORED AND INSTALLED PER THE DETAILS ON THE DSA APPROVED CONSTRUCTION DOCUMENTS. WHERE NO DETAIL IS INDICATED, THE FOLLOWING COMPONENTS SHALL BE ANCHORED OR BRACED TO MEET THE FORCE AND DISPLACEMENT REQUIREMENTS PRESCRIBED IN THE 2016 CBC, SECTIONS 1616A.1.18 THROUGH 1616A.1.26 AND ASCE 7-10 CHAPTER 13, 26 AND 30.

1. ALL PERMANENT EQUIPMENT AND COMPONENTS.
2. TEMPORARY OR MOVABLE EQUIPMENT THAT IS PERMANENTLY ATTACHED (E.G. HARD WIRED) TO THE BUILDING UTILITY SERVICES SUCH AS ELECTRICITY, GAS OR WATER.
3. MOVABLE EQUIPMENT WHICH IS STATIONED IN ONE PLACE FOR MORE THAN 8 HOURS AND HEAVIER THAN 400 POUNDS OR HAS A CENTER OF MASS LOCATED 4 FEET OR MORE ABOVE THE ADJACENT FLOOR OR ROOF LEVEL THAT DIRECTLY SUPPORT THE COMPONENT ARE REQUIRED TO BE ANCHORED WITH TEMPORARY ATTACHMENT.

THE FOLLOWING MECHANICAL AND ELECTRICAL COMPONENTS SHALL BE POSITIVELY ATTACHED TO THE STRUCTURE, BUT THE ATTACHMENT NEED NOT BE DETAILED ON THE PLANS. THESE COMPONENTS SHALL HAVE FLEXIBLE CONNECTIONS PROVIDED BETWEEN THE COMPONENT AND ASSOCIATED DUCTWORK, PIPING, AND CONDUIT.

A. COMPONENTS WEIGHING LESS THAN 400 POUNDS AND HAVE A CENTER OF MASS LOCATED 4 FEET OR LESS ABOVE THE ADJACENT FLOOR OR ROOF LEVEL THAT DIRECTLY SUPPORT THE COMPONENT.

B. COMPONENTS WEIGHING LESS THAN 20 POUNDS, OR IN THE CASE OF DISTRIBUTED SYSTEMS, LESS THAN 5 POUNDS PER FOOT, WHICH ARE SUSPENDED FROM A ROOF OR FLOOR OR HUNG FROM A WALL.

FOR THOSE ELEMENTS THAT DO NOT REQUIRE DETAILS ON THE APPROVED DRAWINGS, THE INSTALLATION SHALL BE SUBJECT TO THE APPROVAL OF THE DESIGN PROFESSIONAL IN GENERAL RESPONSIBLE CHARGE OR STRUCTURAL ENGINEER DELEGATED RESPONSIBILITY AND THE DSA DISTRICT STRUCTURAL ENGINEER. THE PROJECT INSPECTOR WILL VERIFY THAT ALL COMPONENTS AND EQUIPMENT HAVE BEEN ANCHORED IN ACCORDANCE WITH ABOVE REQUIREMENTS.

PIPING, DUCTWORK, AND ELECTRICAL DISTRIBUTION SYSTEM BRACING NOTE

PIPING, DUCTWORK, AND ELECTRICAL DISTRIBUTION SYSTEMS SHALL BE BRACED TO COMPLY WITH THE FORCES AND DISPLACEMENTS PRESCRIBED IN ASCE 7-10 SECTION 13.3 AS DEFINED IN ASCE 7-10 SECTION 13.6.5.6, 13.6.7, 13.6.8, AND 2016 CBC, SECTIONS 1616A.1.24, 1616A.1.25 AND 1616A.1.26.

THE METHOD OF SHOWING BRACING AND ATTACHMENTS TO THE STRUCTURE FOR THE IDENTIFIED DISTRIBUTION SYSTEM ARE AS NOTED BELOW. WHEN BRACING AND ATTACHMENTS ARE BASED ON A PREAPPROVED INSTALLATION GUIDE (E.G., SMACNA OR OSHPD OPM), COPIES OF THE BRACING SYSTEM INSTALLATION GUIDE OR MANUAL SHALL BE AVAILABLE ON THE JOBSITE PRIOR TO THE START OF AND DURING THE HANGING AND BRACING OF THE DISTRIBUTION SYSTEMS. THE STRUCTURAL ENGINEER OF RECORD SHALL VERIFY THE ADEQUACY OF THE STRUCTURE TO SUPPORT THE HANGER AND BRACE LOADS.

MECHANICAL PIPING (MP), MECHANICAL DUCTS (MD), PLUMBING PIPING (PP), ELECTRICAL DISTRIBUTION SYSTEM (E):

MP☐MD☐PP☐ E☒ – OPTION 1: DETAILED ON THE APPROVED DRAWINGS WITH PROJECTS SPECIFIC NOTES AND DETAILS.

MP☐MD☐PP☐ E☐ – OPTION 2: SHALL COMPLY WITH THE APPLICABLE OSHPD PRE-APPROVAL (OPM #) # _____ .

MP☐MD☐PP☐ – OPTION 3: SHALL COMPLY WITH SMACNA SEISMIC RESTRAINT MANUAL, OSHPD EDITION (2009), INCLUDING ANY ADDENDA. FASTENERS AND OTHER ATTACHMENTS NOT SPECIFICALLY IDENTIFIED IN THE SMACNA SEISMIC RESTRAINT MANUAL, OSHPD EDITION, ARE DETAILED ON THE APPROVED DRAWING WITH PROJECT SPECIFIC NOTES AND DETAILS. THE DETAILS SHALL ACCOUNT FOR THE APPLICABLE SEISMIC HAZARD LEVEL _____ AND CONNECTION LEVEL_____ FOR THE PROJECT AND CONDITIONS.

8. SHUT DOWN OF EXISTING ELECTRICAL SYSTEMS SERVING THE REST OF THE SCHOOL WILL NOT BE ALLOWED.

9. THIS CONTRACTOR SHALL COORDINATE ALL LINE AND LOW VOLTAGE COMPONENTS AND WIRING TYPES TO, MATCH EXISTING SYSTEMS, WITH THE SCHOOL DISTRICT PRIOR TO BID AND INCLUDE ALL COSTS FOR A COMPLETE OPERABLE SYSTEM EXPANSION.

10. ALL EXPOSED CONDUIT AND ELECTRICAL EQUIPMENT SUPPORT INFRASTRUCTURE SHALL BE PAINTED TO MATCH EXISTING FINISH. COLOR TO BE SELECTED BY THE OWNER. SEE SPECIFICATION 26 00 00 SECTION 2.1 I(1).

11. THE NUMERAL(S) SHOWN AT TOP LIGHT FIXTURE IDENTIFICATION SYMBOL WHICH INDICATES NUMBER OF LIGHT FIXTURES REQUIRED SHALL NOT BE USED BY THE CONTRACTOR FOR HIS QUANTITY TAKE-OFF AT BIDDING OR FOR DETERMINATION OF HOW MANY FIXTURES WILL BE INSTALLED. THE CONTRACTOR SHALL INSTALL A LIGHT FIXTURE WHEREVER A FIXTURE OUTLET IS SHOWN ON DRAWINGS.

12. IDENTIFICATION NAME PLATES FOR PANELS AND SWITCHBOARDS/DISTRIBUTION PANEL FEEDER CIRCUIT BREAKERS SHALL MATCH THE NOMENCLATURE PROVIDED BY THE OWNER AT THE END OF THE CONTRACT.

13. ALL EXTERIOR MOUNTED EQUIPMENT SHALL BE WEATHERPROOF AND PROVIDED IN A WEATHERPROOF ENCLOSURE.

14. INSTALL RACEWAY SYSTEMS AS FOLLOWS:

A. RIGID GALVANIZED STEEL IN ALL OUTDOOR LOCATIONS AND IN INDOOR LOCATIONS WHERE SUBJECT TO PHYSICAL DAMAGE.

B. I.M.C. OR E.M.T. IN ALL INDOOR AREAS.

C. FLEXIBLE METAL CONDUIT FOR FINAL CONNECTIONS TO LIGHT FIXTURES, MOTORS, VIBRATING ELECTRICAL EQUIPMENT AND HORIZONTAL RUNS IN WOOD STUD WALLS.

D. PVC CONDUIT FOR UNDERGROUND RUNS. USE 20 MIL PVC TAPED RIGID STEEL RISER ELBOWS AND RISERS FOR CONDUIT STUB-UPS.

E. USE COMPRESSION TYPE FITTINGS FOR ALL METALLIC CONDUIT.

F. 1" CONDUIT MINIMUM FOR UNDERGROUND INSTALLATIONS.

15. ALL NEW WIRING SHALL BE COPPER.

16. PROVIDE THE OWNER AND THIS ENGINEER WITH ONE SET OF ELECTRICAL "AS-BUILTS" AT THE COMPLETION OF JOB.

17. CONDUIT ROUTING INDICATED ON THESE PLANS IS DIAGRAMMATIC. ACTUAL ROUTING OF CONDUITS SHALL BE COORDINATED IN THE FIELD TO AVOID INTERFERENCE WITH OTHER UTILITIES AND TRADES. THE CONTRACTOR SHALL INSTALL ALL CONDUIT, JUNCTION/PULL BOXES, ETC., AS REQUIRED FOR A COMPLETE SYSTEM IN FULL COMPLIANCE WITH ALL APPLICABLE CODES.

18. ALL OUTLET LOCATIONS SHALL BE COORDINATED WITH ARCHITECTURAL ELEVATIONS PRIOR TO INSTALLATION.

19. NOT USED.

20. ELECTRICAL CONTRACTOR SHALL PERFORM ALL WORK IN STRICT ACCORDANCE WITH GOVERNING CODES.

21. ALL EQUIPMENT SHALL BE NEW AND BEAR A "UL" LABEL – U.O.N..

22. COMPLETE ELECTRICAL INSTALLATION SHALL BE GUARANTEED IN WRITING FOR A PERIOD OF (1) YEAR – U.O.N..

23. ELECTRICAL CONTRACTOR SHALL VISIT SITE PRIOR TO BID DATE, TO VERIFY ALL EXISTING CONDITIONS TO BE ENCOUNTERED IN THE INSTALLATION OF ALL NEW EQUIPMENT, FIXTURES DEVICES, FEEDERS, ETC.. EXACT INSTALLATION METHOD AND REQUIREMENTS SHALL BE VERIFIED AND DETERMINED PRIOR TO BID DATE. CONTRACTORS SHALL IMMEDIATELY NOTIFY THIS ENGINEER OF ANY REQUIRED MODIFICATIONS WHICH ARE NOT SHOWN ON THESE DRAWINGS. SUBMITTAL OF BID INDICATES CONTRACTOR IS COGNIZANT OF ALL JOB SITE CONDITIONS AND WORK TO BE PERFORMED.

24. ALL EQUIPMENT ELECTRICAL CHARACTERISTICS, LOCATIONS, AND CONNECTION REQUIREMENTS SHALL BE VERIFIED PRIOR TO ANY ROUGH-IN WORK.

25. ALL POWER AND LIGHTING BRANCH CIRCUITS SHALL BE INSTALLED WITH A #12 GREEN GROUND WIRE U.O.N. THE COMPLETE ELECTRICAL SYSTEM SHALL BE GROUNDED IN ACCORDANCE WITH ARTICAL 250 OF THE CALIFORNIA ELECTRICAL CODE (CEC).

26. IT SHALL BE THIS CONTRACTOR'S RESPONSIBILITY TO DO ALL CORING, CUTTING, PATCHING AND REFINISHING OF WALLS AND SURFACES WHEREVER IT IS NECESSARY FOR HIM TO PENETRATE FOR HIS WORK. ALL OPENINGS MADE SHALL BE SEALED TO MEET THE RATED INTEGRITY OF THE PARTICULAR WALL, FLOOR OR CEILING.

27. THE CONTRACTOR SHALL STRATEGICALLY LOCATE JUNCTION BOXES AND PULL BOXESBOXES, ETC., IN ACCESSIBLE CEILING SPACES. PROVIDE ACCESS PANELS WHERE JUNCTION/PULL BOXES ARE LOCATED IN INACCESSIBLE CEILING SPACES. COORDINATE LOCATION OF REQUIRED ACCESS PANELS PRIOR TO ROUGH-IN.

28. ALL WIRING AND ELECTRICAL EQUIPMENT INSTALLED FOR MECHANICAL AND PLUMBING EQUIPMENT SHALL BE IN ACCORDANCE WITH THESE DRAWINGS AND THE WIRING DIAGRAMS OF THE MECHANICAL AND PLUMBING DRAWINGS.

29. UNLESS SPECIFICALLY SHOWN ON THESE PLANS NO STRUCTURAL MEMBER SHALL BE CUT, DRILLED, NOR NOTCHED WITHOUT PRIOR WRITTEN AUTHORIZATION FROM THE STRUCTURAL ENGINEER AND THE DISTRICT STRUCTURAL ENGINEER FROM THE DIVISION OF THE STATE ARCHITECT.

APPLCIABLE CODES
ALL WORK SHALL BE PERFORMED IN ACCORDANCE WITH ALL APPLICABLE LAWS AND REGULATIONS, AND THE REQUIREMENTS OF THE CALIFORNIA CODE OF REGULATIONS (C.C.R.), TITLE 24, INCLUSIVE OF:
2016 CALIFORNIA ADMINISTRATIVE CODE (CAC), C.C.R. TITLE 24, PART 1
2016 CALIFORNIA BUILDING CODE (CBC), C.C.R. TITLE 24, PART 2, BASED ON 2015 INTERNATIONAL BUILDING CODE.
2016 CALIFORNIA ELECTRICAL CODE (CEC), C.C.R. TITLE 24, PART 3, BASED ON 2014 NATIONAL ELECTRICAL CODE (NEC).
2016 CALIFORNIA MECHANICAL CODE (CMC), C.C.R. TITLE 24, PART 4, BASED ON 2015 UNIFORM MECHANICAL CODE (UMC).
2016 CALIFORNIA PLUMBING CODE (CPC), C.C.R. TITLE 24, PART 5, BASED ON 2015 UNIFORM PLUMBING CODE (UPC).
2016 CALIFORNIA ENERGY CODE, C.C.R. TITLE 24, PART 6.
2016 CALIFORNIA FIRE CODE (CFC), C.C.R. TITLE 24, PART 9, BASED ON 2015 INTERNATIONAL FIRE CODE.
2016 CALIFORNIA EXISTING BUILDING CODE, C.C.R. TITLE 24, PART 10, BASED ON 2015 INTERNATIONAL EXISTING BUILDING CODE.
2016 CALIFORNIA REFERENCED STANDARDS CODE, C.C.R. TITLE 24, PART 12.

DEMOLITION NOTES

1. ALL ELECTRICAL EQUIPMENT, OUTLETS, DEVICES, ETC., THAT ARE MARKED FOR DELETION SHALL BE REMOVED COMPLETELY, INCLUDING CONDUIT AND WIRES BACK TO THE LAST REMAINING FIXTURE, OUTLET, DEVICE, SERVING PANEL, ETC.

2. WHERE EXISTING OUTLET/DEVICES TO REMAIN ARE FED BY OUTLETS BEING REMOVED BY WORK UNDER THIS CONTRACT, THE CONTRACTOR SHALL ROUTE NEW CONDUIT, WIRE, ETC., AS REQUIRED TO MAINTAIN THE SUBJECT OUTLETS IN OPERATION.

3. THE ELECTRICAL CONTRACTOR SHALL COORDINATE WITH THE OWNER PRIOR TO REMOVAL OF EXISTING ELECTRICAL/LOW VOLTAGE EQUIPMENT AND TURN OVER REMOVED EQUIPMENT THAT THE OWNER REQUESTS, IN AS-FOUND CONDITION. EQUIPMENT THAT IS TO BE TURNED OVER SHALL BE BOXED AND TAGGED TO IDENTIFY THE SPECIFIC EQUIPMENT.

4. ALL EXISTING CONDUITS WITHIN PROJECT AREA FOR LIGHTING FIXTURES, RECEPTACLES, OTHER BRANCH CIRCUITS LOADS AND COMMUNICATIONS/SIGNAL SYSTEMS, WHETHER SHOWN ON PLANS OR NOT, SHALL BE A PART OF THIS CONTRACT.

5. IN GENERAL, THE DEMOLITION PLAN SHOWS EXISTING EQUIPMENT THAT IS TO REMAIN, BE REMOVED OR REMOVED AND RELOCATED. HOWEVER, ELECTRICAL EQUIPMENT WHETHER SHOWN ON THIS DRAWING OR NOT, THAT IS LOCATED IN A REMOVED WALL OR CEILING, SHALL BE REMOVED UNLESS OTHERWISE NOTED.

6. WHERE EXISTING EQUIPMENT IS REMOVED BY WORK UNDER THIS CONTRACT, EXISTING CONDUIT FEEDS UP THROUGH THE FLOOR SHALL BE CUT OFF AND PLUGGED FLUSH WITH FLOOR AND CONDUCTORS REMOVED FROM THAT POINT BACK TO THE LAST OUTLET REMAINING IN SERVICE. WHERE THE SUBJECT CONDUIT FEEDS OUTLETS/ DEVICES REMAINING IN OPERATION THE CONTRACTOR SHALL REROUTE THE SUBJECT CONDUIT AND CONDUCTORS AS REQUIRED TO MAINTAIN OPERATION OF SUCH CIRCUITS/SYSTEMS. IT IS THE CONTRACTOR'S RESPONSIBILITY TO IDENTIFY AND DIMENSION ALL SUCH CONDUITS ON THE "RECORD" DRAWINGS.

7. WHERE EXISTING ROOF MOUNTED EQUIPMENT IS REMOVED BY WORK UNDER THIS CONTRACT, THE EXISTING CONDUIT FEEDS UP THROUGH THE ROOF SHALL BE REMOVED FROM THAT POINT BACK TO THE SERVING PANEL OR LAST EQUIPMENT REMAINING IN SERVICE. WHERE THE SUBJECT CONDUIT FEEDS EQUIPMENT REMAINING IN OPERATION THE CONTRACTOR SHALL REROUTE THE SUBJECT CONDUIT AND CONDUCTORS AS REQUIRED TO MAINTAIN OPERATION OF SUCH EQUIPMENT. THE CONTRACTOR SHALL PATCH, REPAIR AND REFINISH ALL WALL AND ROOF PENETRATIONS AFFECTED BY THE REMOVAL OF THE CONDUIT.

8. IT SHALL BE THE RESPONSIBILITY OF THIS CONTRACTOR TO MAINTAIN CONTINUITY OF ALL ELECTRICAL AND COMMUNICATION SYSTEMS, EQUIPMENT, ETC., REMAINING IN OPERATION. MAINTAINING CONTINUITY SHALL CONSIST OF RE-ROUTING CONDUIT, WIRE, ETC., AS REQUIRED TO MAINTAIN THE SUBJECT SERVICES IN OPERATION.

9. EXISTING CIRCUITS THAT ARE REMOVED AND NOT RE-USED SHALL BE IDENTIFIED ON THE PANEL SCHEDULE AS "SPARE".

10. REFER TO GENERAL NOTES, THIS SHEET, FOR ADDITIONAL REQUIREMENTS.

REFERENCES & ABBREVIATIONS

⊖	DETAIL REFERENCE
1	KEYNOTE REFERENCE
A.F.F.	ABOVE FINISH FLOOR
U.O.N.	UNLESS OTHERWISE NOTED
C.O.	CONDUIT ONLY W/PULL ROPE
WP	WEATHER PROOF
CU.	COPPER
M.L.O.	MAIN LUGS ONLY
E or (E)	EXISTING TO REMAIN

MCB	MAIN CIRCUIT BREAKER
FLA	FULL LOAD AMPS
C.	CONDUIT
V.	VOLTS
A	AMPS
GFI	GROUND FAULT INTERRUPTER
GND	GROUND
V.L.	VERIFY LOCATION
A.C.	ABOVE COUNTER
N.L.	NIGHT LIGHT

SYMBOL LIST

———	CONDUIT RUN, CONCEALED IN CEILING, WALLS OR UNDER FLOOR 3/4" MIN. IN CEILING OR WALLS, 1"C. MINIMUM FOR UNDERGROUND / UNDER FLOOR.
———●	CONDUIT TURNED DOWN.
———○	CONDUIT TURNED UP.
— — —	CONDUIT RUN UNDERGROUND. 1"C. MINIMUM. PROVIDE SIZE PER PLAN.
#10	CROSS LINES ON CONDUIT RUNS INDICATE NUMBER OF #12 WIRES CONTAINED THEREIN. TWO #12 ARE INDICATED WHEN CROSS LINES ARE NOT SHOWN. NUMERALS ADJACENT TO CROSS LINES ON CONDUIT RUNS INDICATE SIZE OF CONDUCTORS IN LIEU OF #12.
B-1,3	CONDUIT HOME RUN TO PANELBOARD. LETTER AND NUMERALS INDICATES ELECTRICAL PANEL AND CIRCUIT NUMBER.
A 3 +20'-0"	LIGHTING FIXTURE IDENTIFICATION SYMBOL. LETTER INDICATES TYPE OF FIXTURE. NUMERAL AT TOP OF HEXAGON INDICATES NUMBER OF FIXTURES REQUIRED. NUMBER AT BOTTOM OF HEXAGON INDICATES MOUNTING HEIGHT FROM FLOOR TO BOTTOM OF FIXTURE. OMMISSION OF MOUNTING HEIGHT INDICATES CEILING MOUNTING.
WP	WEATHERPROOF.
	BRANCH CIRCUIT PANEL, MOUNTING AS SHOWN ON SCHEDULES.
	MOLDED CASE CIRCUIT BREAKER (SINGLE LINE DIAGRAM).
AT	CIRCUIT BREAKER AMPERE TRIP RATING (SINGLE LINE DIAGRAM).
— E —	EXISTING CONDUIT AND CONDUCTORS TO REMAIN IN PLACE.
— R —	EXISTING CONDUIT TO BE COMPLETELY DISCONNECTED AND REMOVED.
— EN —	EXISTING CONDUIT WITH NEW CONDUCTORS.
— EX —	EXISTING CONDUIT TO BE RE-USED. CONDUCTORS TO BE DISCONNECTED AND REMOVED.
(E)	EXISTING EQUIPMENT TO REMAIN IN OPERATION.
(R)	EXISTING EQUIPMENT TO DISCONNECTED AND REMOVED.
(N)	NEW EQUIPMENT.
AS/P/AF	FUSED DISCONNECT SWITCH. HEAVY DUTY TYPE WITH REQUIRED QUANTITY OF DUAL ELEMENT TIME DELAY FUSES. NEMA 3R FOR OUTDOOR USE. AS=SWITCH AMPERE RATING. P=NUMBER OF POLES. AF=FUSE AMPERE RATING.
1	NOTE IDENTIFICATION SYMBOL.
X E4X	DETAIL IDENTIFICATION SYMBOL.
S_m	MANUAL MOTOR STARTER WITH THERMAL OVERLOAD. RATING AND NUMBER OF POLES PER THE EQUIPMENT NAMEPLATE DATA.
J C WP	JUNCTION BOX. C = CEILING MOUNTED. WP = WEATHER PROOF NEMA 3R.
	DUPLEX RECEPTACLE, FLUSH IN WALL, GROUNDING TYPE (20 AMP, 120V., WALL PLATE TO MATCH DEVICE) MTD. AT +18".
GFI	DUPLEX RECEPTACLE, WITH GROUND FAULT INTERRUPTER (20 AMP, 120V., 3W, WALL PLATE TO MATCH DEVICE) MTD. AT +18". RECEPTACLE SHALL BE PROVIDED COMPLETE WITH WEATHERPROOF COVERS U.L. LISTED FOR WET LOCATIONS WHEN IN USE.
AC 1	EQUIPMENT DESIGNATION. SEE MECHANICAL PLANS.
DD	FIRE ALARM DUCT SMOKE DETECTOR.

FIRE ALARM SYMBOL LIST

SYMBOL	MFG.	QTY	PART NO.	DESCRIPTION	BACKBOX/BASE	MNTG. HEIGHT/DETAILS	CSFM LISTING NO.
FACP	FIRE-LITE	1	MS-9600	EXISTING FIRE ALARM CONTROL PANEL A#03-108237	PROVIDED WITH PANEL	WALL	7165-0075:0217
DD	FIRE-LITE	10	D355PL(A)/DNRW	DUCT SMOKE DETECTOR	14.75"L x 5.5"W x 2.75"D	HVAC UNIT	3242-0075:0221

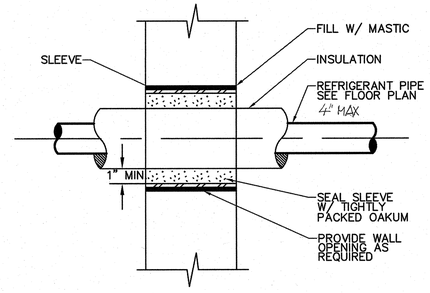

NON FIRE RATED WALL PENETRATION — SCALE: NONE — 1

ARCHITECTS
WLC
CLIENT FOCUSED • PASSION DRIVEN

SOUTHERN CALIFORNIA
8163 ROCHESTER AVENUE, SUITE 100
RANCHO CUCAMONGA
CALIFORNIA 91730-0729

TEL: 909-987-0909
www.wlcarchitects.com

LONGFELLOW ELEMENTARY SCHOOL
HVAC REPLACEMENT
COMPTON UNIFIED SCHOOL DISTRICT
1101 S DWIGHT AVE.
COMPTON, CA 90220

LICENSED ARCHITECT — RICHARD E. MARK GRAHAM — C-26046 — 03-31-19 — STATE OF CALIFORNIA
REGISTERED PROFESSIONAL ENGINEER — RICHARD E. STATEN — No. E17229 — 6/30/18 — STATE OF CALIFORNIA

CONSULTANT
A&P ENGINEERING GROUP, INC.
9320 BASELINE RD., SUITE C, RANCHO CUCAMONGA, CA 91701
TEL: (909) 941-3008 FAX: (909) 941-3021

IDENTIFICATION STAMP
DIV. OF THE STATE ARCHITECT
OFFICE OF REGULATION SERVICES
APPL 03-118423
AC — FLS — SS — EY
DATE — MAR 06 2018
FILE: 19-23

NO	DATE	BY	DESCRIPTION
1			REVISIONS

DRAWN: LS | CHECKED: RES
DATE: 3/6/2018 | SCALE: AS NOTED
PROJECT NUMBER: 1723400

GENERAL NOTES, SYMBOL LIST & DETAILS

DRAWING NUMBER: E0.1

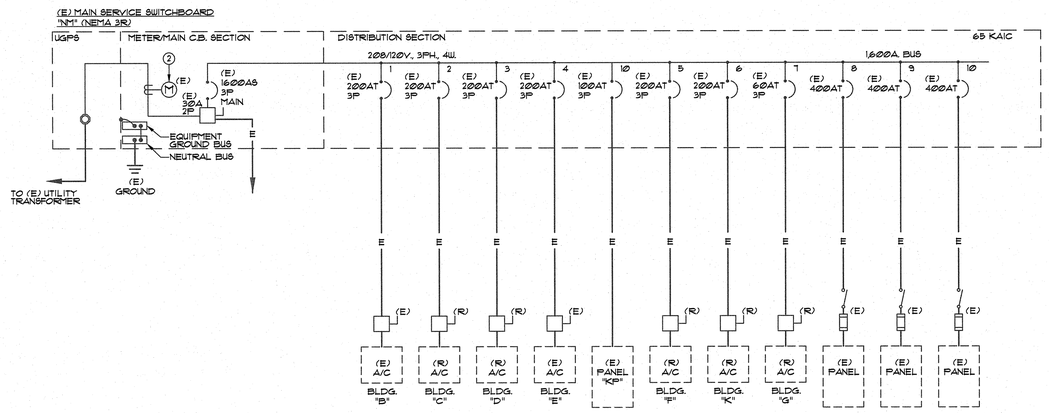

SINGLE LINE NOTES

1. REFER TO GENERAL NOTES, DRAWING E0.1, FOR ADDITIONAL REQUIREMENTS.
2. EXISTING SCE METER NUMBER 3591150-001963.

DEMOLITION SINGLE LINE DIAGRAM | NONE | 1

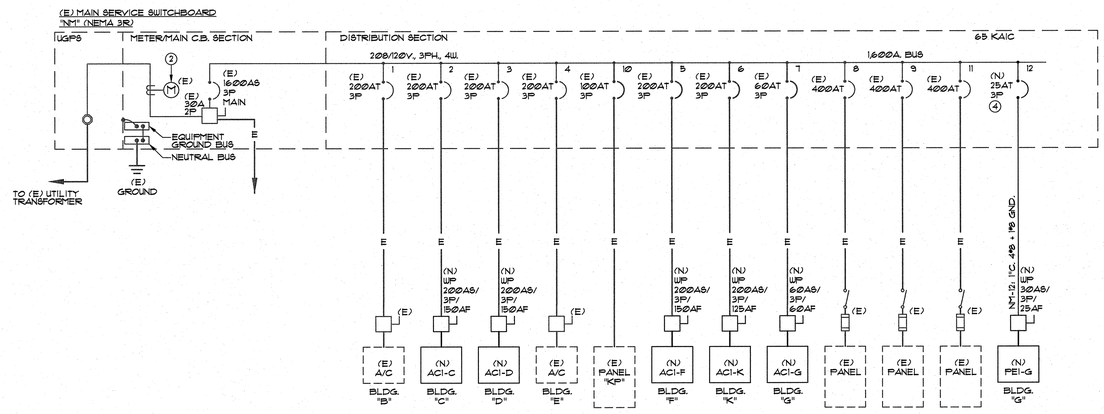

"NM" LOAD SUMMARY	
EXISTING LOAD	778.0 A.
+25% PER CEC 220-87	194.5 A.
NEW LOAD (HVAC)	42.9 A.
NEW LOAD (BUILDING PANELS)	10.43 A.
TOTAL LOAD	1,025.81 A.

* BASED ON 12 MONTHS ENERGY USAGE DATA.

HVAC EQUIPMENT LOAD SUMMARY	
REMOVED LOAD	
BUILDING "A" A/C	- 38.3 A.
BUILDING "C" A/C	- 114.0 A.
BUILDING "D" A/C	- 114.0 A.
BUILDING "F" A/C	- 114.0 A.
BUILDING "G" A/C	- 47.3 A.
BUILDING "K" A/C	- 130.2 A.
TOTAL	- 557.8 A.
ADDED LOAD	
BUILDING "A" ACI-A	+ 38.3 A.
BUILDING "C" ACI-C	+ 130.8 A.
BUILDING "D" ACI-D	+ 130.8 A.
BUILDING "F" ACI-F	+ 130.8 A.
BUILDING "G" ACI-G	+ 54.0 A.
BUILDING "K" ACI-K	+ 104.6 A.
BUILDING "G" PEI-G (POWER EXHAUST)	+ 11.38 A.
TOTAL	+600.7 A.
NET LOAD INCREASE	+ 42.9 A.

SINGLE LINE NOTES

1. REFER TO GENERAL NOTES, DRAWING E0.1, FOR ADDITIONAL REQUIREMENTS.
2. EXISTING SCE METER NUMBER 3591150-001963.
3. CONTRACTOR TO PROVIDE UPDATED NAME PLATES TO IDENTIFY THE NEW CIRCUIT BREAKERS WITHIN THE MAIN SWITCHBOARD AND DISTRIBUTION BOARD UPON COMPLETION OF REMODEL WORK.
4. NEW CIRCUIT BREAKER TO MATCH EXISTING IN MANUFACTURER, SHORT CIRCUIT RATING SHALL BE EQUAL TO OR GREATER THAN THE HIGHEST AIC RATING OF ANY EXISTING CIRCUIT BREAKER IN THE SWITCHBOARD.

REMODEL SINGLE LINE DIAGRAM | NONE | 2

ARCHITECTS
WLC
CLIENT FOCUSED • PASSION DRIVEN

SOUTHERN CALIFORNIA
8163 ROCHESTER AVENUE, SUITE 100
RANCHO CUCAMONGA
CALIFORNIA 91730-0729

TEL: 909-987-0909
www.wlcarchitects.com

LONGFELLOW ELEMENTARY SCHOOL HVAC REPLACEMENT

COMPTON UNIFIED SCHOOL DISTRICT
1101 S DWIGHT AVE.
COMPTON, CA 90220

LICENSED ARCHITECT
MARK GRAHAM
C-26046
03-31-19
STATE OF CALIFORNIA

REGISTERED PROFESSIONAL ENGINEER
RICHARD E. SOTO
No. E17229
6/30/18
STATE OF CALIFORNIA

CONSULTANT
A&F ENGINEERING GROUP, INC.
9320 BASELINE RD., SUITE C, RANCHO CUCAMONGA, CA 91701
TEL. (909) 941-3008 FAX. (909) 941-8211

IDENTIFICATION STAMP
DIV. OF THE STATE ARCHITECT
OFFICE OF REGULATION SERVICES
APPL 03-118423
FILE: 19-23
AC — FLS — SS EY
DATE MAR 6 2018

NO	DATE	BY	DESCRIPTION
			REVISIONS

DRAWN: LS | CHECKED: RES
DATE: 3/6/2018 | SCALE: AS NOTED
PROJECT NUMBER: 1723400

DEMOLITION AND REMODEL SINGLE LINE DIAGRAM

DRAWING NUMBER: E-0.2

PANEL "AA"

VOLTAGE: 240/120V-3-WIRE | LOCATION: BUILDING "A" | MAIN BREAKER: 225A. | BUS SIZE COPPER: 225A. | SCA: 10 KAIC | MOUNT: SURFACE | ENTRY: BOTTOM

	DESCRIPTION	CKT	BKR	P	LTS	REC	MSC	MTR	A-VA	B-VA	AMPS
*	EXISTING LOAD	1	20	1							
	EXISTING LOAD	3a	20	1							
	COPY MACHINE	3b	20	1							
	MASTER CLOCK BELLS	5	20	1							
	EXISTING LOAD	7	20	1							
	EXISTING LOAD	9	20	1							
	LOUNGE LTS	11	20	1							
	REFRIG	13a	20	1							
	COPY MACHINE	13b	20	1							
	OUTSIDE VENDING	15a	20	1							
	OUTSIDE VENDING	15b	20	1							
								SUB TOTAL VOLT/AMPS:		0	0
*	EXISTING LOAD	2	20	1							
	MASTER CLOCK	4	20	1							
	OUTLETS, TIME CLOCK	6	20	1							
	DATA	8	30	1							
	EXISTING LOAD	10a	20	1							
	EXISTING LOAD	10b	20	1							
	SODA MACHINE	12a	20	1							
	SODA MACHINE	12b	20	1							
Δ	ACT-A	14a	50	2							
Δ	W/CKT. 14a	14b	—	—							
*	EXISTING LOAD	16a	20	1							
*	EXISTING LOAD	16b	20	1							
								SUB TOTAL VOLT/AMPS:		0	0

CONNECTED: 0 VA | TOTAL VOLT/AMPS: 0 | 0
25% OF MTR: VA | TOTAL AMPS/PHASE: 0 | 0
25% OF LCL: 0 VA
CALCULATED: 0 VA = 0.00 AMPS 0.00 ACTUAL AMPS

* = INDICATES EXISTING LOAD TO REMAIN.
Δ = INDICATES NEW LOAD ON EXISTING CIRCUIT BREAKER. NEW AC UNIT IS ONE FOR ONE REPLACEMENT. NO INCREASED LOAD.

PANEL "C"

VOLTAGE: 240/120V-3-WIRE | LOCATION: BUILDING "F" | MAIN BREAKER: 225A. | BUS SIZE COPPER: 225A. | SCA: 10 KAIC | MOUNT: SURFACE | ENTRY: BOTTOM

	DESCRIPTION	CKT	BKR	P	LTS	REC	MSC	MTR	A-VA	B-VA	AMPS
*	OUTSIDE LTS	1	20	1							
*	BATHROOM LTS	3	20	1							
	SPARE	5	20	1							
	SPARE	7	20	1							
*	RM 20 LTS	9	20	1							
	RM 20 LTS	11	20	1							
	RM 20 PLUGS	13	20	1							
	RM 19 LTS	15	20	1							
	SPARE	17	20	1							
	SPARE	19	20	1							
	SPARE	21	20	1							
	SPARE	23	20	1							
	SPARE	25	20	1							
	SPARE	27	20	1							
	SPARE	29	20	1							
□	VAV1-F THRU VAV6-F	31	20	1				6		300	
	SPACE	33									
	SPACE	35									
	SPACE	37									
	SPACE	39									
	SPACE	41									
								SUB TOTAL VOLT/AMPS:		0	300
*	RM 18 LTS	2	20	1							
	RM 18 LTS	4	20	1							
	RM 18 LTS	6	20	1							
	RM 20 PLUGS	8	20	1							
	SPARE	10	20	1							
	RM 18 PLUGS	12	20	1							
	RM 18 & 19 PLUGS	14	20	1							
	RM 18 PLUGS	16	20	1							
	RM 19 PLUGS	18	20	1							
	RM 19 PLUGS	20	20	1							
	SPARE	22	20	1							
	SPARE	24	20	1							
	SPARE	26	20	1							
	SPARE	28	20	1							
	SPARE	30	20	1							
	SPACE	32									
	SPACE	34									
	SPACE	36									
	SPACE	38									
	SPACE	40									
	SPACE	42									
								SUB TOTAL VOLT/AMPS:		0	0

CONNECTED: 300 VA | TOTAL VOLT/AMPS: 0 | 300
25% OF MTR: VA | TOTAL AMPS/PHASE: 0 | 3
25% OF LCL: 0 VA
CALCULATED: 300 VA = 1.25 AMPS 1.25 ACTUAL AMPS

* = INDICATES EXISTING LOAD TO REMAIN.
□ = INDICATES NEW LOAD AND NEW CIRCUIT BREAKER AT EXISTING SPACE. NEW CIRCUIT BREAKER SHALL MATCH THE HIGHEST EXISTING AIC RATED CIRCUIT BREAKER WITHIN THIS PANEL. NEW CIRCUIT BREAKER TO MATCH EXISTING CIRCUIT BREAKERS IN MANUFACTURER.

PANEL "F2"

VOLTAGE: 240/120V-3-WIRE | LOCATION: BUILDING "D" | MAIN BREAKER: 225A. | BUS SIZE COPPER: 225A. | SCA: 10 KAIC | MOUNT: SURFACE | ENTRY: BOTTOM

	DESCRIPTION	CKT	BKR	P	LTS	REC	MSC	MTR	A-VA	B-VA	AMPS
*	EXISTING LOAD	1	20	1							
	EXISTING LOAD	3	20	1							
	EXISTING LOAD	5	20	1							
	EXISTING LOAD	7	20	1							
	EXISTING LOAD	9	20	1							
	EXISTING LOAD	11	20	1							
	EXISTING LOAD	13	20	1							
	EXISTING LOAD	15	20	1							
□	VAV1-D THRU VAV6-D	17	20	1				6		300	
	SPACE	19									
	SPACE	21									
	SPACE	23									
	SPACE	25									
	SPACE	27									
	SPACE	29									
	SPACE	31									
	SPACE	33									
	SPACE	35									
	SPACE	37									
	SPACE	39									
	SPACE	41									
								SUB TOTAL VOLT/AMPS:		300	0
*	EXISTING LOAD	2	20	1							
	EXISTING LOAD	4	20	1							
	EXISTING LOAD	6	20	1							
	EXISTING LOAD	8	20	1							
	EXISTING LOAD	10	20	1							
	EXISTING LOAD	12	20	1							
	EXISTING LOAD	14	20	1							
	SPACE	16									
	SPACE	18									
	SPACE	20									
	SPACE	22									
	SPACE	24									
	SPACE	26									
	SPACE	28									
	SPACE	30									
	SPACE	32									
	SPACE	34									
	SPACE	36									
	SPACE	38									
	SPACE	40									
	SPACE	42									
								SUB TOTAL VOLT/AMPS:		0	0

CONNECTED: 300 VA | TOTAL VOLT/AMPS: 300 | 0
25% OF MTR: VA | TOTAL AMPS/PHASE: 3 | 0
25% OF LCL: 0 VA
CALCULATED: 300 VA = 1.25 AMPS 1.25 ACTUAL AMPS

* = INDICATES EXISTING LOAD TO REMAIN.
□ = INDICATES NEW LOAD AND NEW CIRCUIT BREAKER AT EXISTING SPACE. NEW CIRCUIT BREAKER SHALL MATCH THE HIGHEST EXISTING AIC RATED CIRCUIT BREAKER WITHIN THIS PANEL. NEW CIRCUIT BREAKER TO MATCH EXISTING CIRCUIT BREAKERS IN MANUFACTURER.

PANEL "D"

VOLTAGE: 240/120V-3-WIRE | LOCATION: BUILDING "G" | MAIN BREAKER: 225A. | BUS SIZE COPPER: 225A. | SCA: 10 KAIC | MOUNT: SURFACE | ENTRY: BOTTOM

	DESCRIPTION	CKT	BKR	P	LTS	REC	MSC	MTR	A-VA	B-VA	AMPS
□	VAV1-G THRU VAV3-G	1	20	1			3		150		
	SPARE	3	20	1							
	SPARE	5	20	1							
	SPARE	7	20	1							
	SPARE	9	20	1							
	SPARE	11	20	1							
	SPARE	13	20	1							
	SPARE	15	20	1							
	SPARE	17	20	1							
	SPARE	19	20	1							
	SPARE	21	20	1							
	SPARE	23	20	1							
	SPARE	25	20	1							
	SPARE	27	20	1							
	SPARE	29	20	1							
	SPARE	31	20	1							
	SPARE	33	20	1							
	SPARE	35	20	1							
	SPARE	37	20	1							
	SPARE	39	20	1							
	SPARE	41	20	1							
								SUB TOTAL VOLT/AMPS:		150	0
*	RM	2	20	1							
	PLUG	4	20	1							
	PLUG	6	20	1							
	RM 25 LTS	8	20	1							
	PARENT RM PLUGS	10	20	1							
	PARENT RM LTS	12	20	1							
	RM 25 PLUGS	14	20	1							
	RM 25 PLUGS	16	20	1							
	EXISTING LOAD	18	20	1							
	EXISTING LOAD	20	20	1							
	EXISTING LOAD	22	20	1							
	EXISTING LOAD	24	20	1							
	EXISTING LOAD	26	20	1							
	EXISTING LOAD	28	20	1							
	EXISTING LOAD	30	20	1							
	EXISTING LOAD	32	20	1							
	EXISTING LOAD	34	20	1							
	EXISTING LOAD	36	20	1							
	EXISTING LOAD	38	20	1							
	EXISTING LOAD	40	20	1							
	EXISTING LOAD	42	20	1							
								SUB TOTAL VOLT/AMPS:		0	0

CONNECTED: 150 VA | TOTAL VOLT/AMPS: 150 | 0
25% OF MTR: VA | TOTAL AMPS/PHASE: 1 | 0
25% OF LCL: 0 VA
CALCULATED: 150 VA = 0.63 AMPS 0.63 ACTUAL AMPS

* = INDICATES EXISTING LOAD TO REMAIN.
□ = INDICATES NEW LOAD AND NEW CIRCUIT BREAKER AT EXISTING SPACE. NEW CIRCUIT BREAKER SHALL MATCH THE HIGHEST EXISTING AIC RATED CIRCUIT BREAKER WITHIN THIS PANEL. NEW CIRCUIT BREAKER TO MATCH EXISTING CIRCUIT BREAKERS IN MANUFACTURER.

PANEL "E2"

VOLTAGE: 240/120V-3-WIRE | LOCATION: BUILDING "C" | MAIN BREAKER: 225A. | BUS SIZE COPPER: 225A. | SCA: 10 KAIC | MOUNT: SURFACE | ENTRY: BOTTOM

	DESCRIPTION	CKT	BKR	P	LTS	REC	MSC	MTR	A-VA	B-VA	AMPS
*	OUTSIDE LTS	1	20	1							
	OUTSIDE LTS	3	20	1							
	RM 3 RECEPT	5	20	1							
	RM 1 RECEPT	7	20	1							
	STORAGE RM RECEPT	9	20	1							
	SPACE	11									
	SPACE	13									
	SPACE	15									
	SPACE	17									
	SPACE	19									
	SPACE	21									
	SPACE	23									
	SPACE	25									
	SPACE	27									
	SPACE	29									
	SPACE	31									
	SPACE	33									
	SPACE	35									
	SPACE	37									
□	VAV1-C THRU VAV6-C	39	20	1			6			300	
	SPACE	41									
								SUB TOTAL VOLT/AMPS:		0	300
*	RM 2 LTS	2	20	1							
	RM 2 RECEPT	4	20	1							
	RM 1 LTS	6	20	1							
	RM 2 RECEPT	8	20	1							
	RM 3 LTS	10	20	1							
	RM 2	12	20	1							
	RM 2	14	20	1							
	RESTROOM & STORAGE LTS	16	20	1							
	SPACE	18									
	SPACE	20									
	SPACE	22									
	SPACE	24									
	SPACE	26									
	SPACE	28									
	SPACE	30									
	SPACE	32									
	SPACE	34									
	SPACE	36									
	SPACE	38									
	SPACE	40									
	SPACE	42									
								SUB TOTAL VOLT/AMPS:		0	0

CONNECTED: 300 VA | TOTAL VOLT/AMPS: 0 | 300
25% OF MTR: VA | TOTAL AMPS/PHASE: 0 | 3
25% OF LCL: 0 VA
CALCULATED: 300 VA = 1.25 AMPS 1.25 ACTUAL AMPS

* = INDICATES EXISTING LOAD TO REMAIN.
□ = INDICATES NEW LOAD AND NEW CIRCUIT BREAKER AT EXISTING SPACE. NEW CIRCUIT BREAKER SHALL MATCH THE HIGHEST EXISTING AIC RATED CIRCUIT BREAKER WITHIN THIS PANEL. NEW CIRCUIT BREAKER TO MATCH EXISTING CIRCUIT BREAKERS IN MANUFACTURER.

PANEL "G"

VOLTAGE: 240/120V-3-WIRE | LOCATION: BUILDING "K" | MAIN BREAKER: 225A. | BUS SIZE COPPER: 225A. | SCA: 10 KAIC | MOUNT: SURFACE | ENTRY: BOTTOM

	DESCRIPTION	CKT	BKR	P	LTS	REC	MSC	MTR	A-VA	B-VA	AMPS
*	EXISTING LOAD	1	20	1							
	EXISTING LOAD	3	20	1							
	EXISTING LOAD	5	20	1							
	EXISTING LOAD	7	20	1							
	EXISTING LOAD	9	20	1							
	EXISTING LOAD	11	20	1							
	EXISTING LOAD	13	20	1							
	EXISTING LOAD	15	20	1							
	EXISTING LOAD	17	20	1							
	EXISTING LOAD	19	20	1							
	EXISTING LOAD	21	20	1							
	FIRE ALARM	23	20	1							
	EXISTING LOAD	25	20	1							
	EXISTING LOAD	27	20	1							
	EXISTING LOAD	29	20	1							
	EXISTING LOAD	31	20	1							
	EXISTING LOAD	33	20	1							
	EXISTING LOAD	35	20	1							
	EXISTING LOAD	37	20	1							
	EXISTING LOAD	39	20	1							
	EXISTING LOAD	41	20	1							
								SUB TOTAL VOLT/AMPS:		0	0
*	EXISTING LOAD	2	20	1							
	EXISTING LOAD	4	20	1							
	EXISTING LOAD	6	20	1							
	EXISTING LOAD	8	20	1							
	EXISTING LOAD	10	20	1							
	EXISTING LOAD	12	20	1							
	EXISTING LOAD	14	20	1							
	EXISTING LOAD	16	20	1							
	EXISTING LOAD	18	20	1							
○	VAV1-K THRU VAV3-K	20	20	1			3			150	
*	EXISTING LOAD	22	20	1							
	EXISTING LOAD	24	20	1							
	EXISTING LOAD	26	20	1							
	EXISTING LOAD	28	20	1							
	EXISTING LOAD	30	20	1							
	EXISTING LOAD	32	20	1							
	EXISTING LOAD	34	20	1							
	EXISTING LOAD	36	20	1							
	EXISTING LOAD	38	20	1							
	EXISTING LOAD	40	20	1							
	EXISTING LOAD	42	20	1							
								SUB TOTAL VOLT/AMPS:		0	150

CONNECTED: 150 VA | TOTAL VOLT/AMPS: 0 | 150
25% OF MTR: VA | TOTAL AMPS/PHASE: 0 | 1
25% OF LCL: 0 VA
CALCULATED: 150 VA = 0.63 AMPS 0.63 ACTUAL AMPS

* = INDICATES EXISTING LOAD TO REMAIN.
○ = INDICATES NEW LOAD ON EXISTING SPARE CIRCUIT BREAKER. CONTRACTOR TO VERIFY THIS BREAKER IS SPARE PRIOR TO BEGINNING WORK AND NOTIFY THE ENGINEER OF RECORD IF NOT SPARE.

PANEL "G2"

VOLTAGE: 240/120V-3-WIRE | LOCATION: BUILDING "E" | MAIN BREAKER: 225A. | BUS SIZE COPPER: 225A. | SCA: 10 KAIC | MOUNT: SURFACE | ENTRY: BOTTOM

	DESCRIPTION	CKT	BKR	P	LTS	REC	MSC	MTR	A-VA	B-VA	AMPS
*	RM 14 LTS	1	20	1							
	SPARE	3	20	1							
	RM 14 PLUGS	5	20	1							
	OUTSIDE LTS	7	20	1							
	OUTSIDE LTS	9	20	1							
	OUTSIDE LTS	11	20	1							
	SPARE	13	20	1							
	SPARE	15	20	1							
	SPARE	17	20	1							
	SPARE	19	20	1							
	SPARE	21	20	1							
	SPARE	23	20	1							
	SPARE	25	20	1							
□	ZD1-E THRU ZD5-E & BP1	27	20	1				6		300	
□	ZONE DAMPER CONTROLLER	29	20	1				1	500		
□	BY PASS CONTROLLER	31	20	1				1		500	
	SPACE	33									
	SPACE	35									
	SPACE	37									
	SPACE	39									
	SPACE	41									
								SUB TOTAL VOLT/AMPS:		500	800
*	RM 13 LTS	2	20	1							
	RM 13 PLUGS	4	20	1							
	RM 14 PLUGS	6	20	1							
	RECEPTS	8	20	1							
	RM 14 LTS	10	20	1							
	RM 13 RECEPT	12	20	1							
	RM 13 RECEPT	14	20	1							
	FL OUTLET	16	20	1							
	FL OUTLET	18	20	1							
	FL OUTLET	20	20	1							
	FL OUTLET	22	20	1							
	SPARE	24	20	1							
	SPARE	26	20	1							
	SPARE	28	20	1							
	SPACE	30									
	SPACE	32									
	SPACE	34									
	SPACE	36									
	SPACE	38									
	SPACE	40									
	SPACE	42									
								SUB TOTAL VOLT/AMPS:		0	0

CONNECTED: 1300 VA | TOTAL VOLT/AMPS: 500 | 800
25% OF MTR: VA | TOTAL AMPS/PHASE: 4 | 7
25% OF LCL: 0 VA
CALCULATED: 1300 VA = 5.42 AMPS 5.42 ACTUAL AMPS

* = INDICATES EXISTING LOAD TO REMAIN.
□ = INDICATES NEW LOAD AND NEW CIRCUIT BREAKER AT EXISTING SPACE. NEW CIRCUIT BREAKER SHALL MATCH THE HIGHEST EXISTING AIC RATED CIRCUIT BREAKER WITHIN THIS PANEL. NEW CIRCUIT BREAKER TO MATCH EXISTING CIRCUIT BREAKERS IN MANUFACTURER.

ARCHITECTS
WLC
CLIENT FOCUSED • PASSION DRIVEN

SOUTHERN CALIFORNIA
8163 ROCHESTER AVENUE, SUITE 100
RANCHO CUCAMONGA
CALIFORNIA 91730-0729

TEL: 909-987-0909
www.wlcarchitects.com

LONGFELLOW ELEMENTARY SCHOOL
HVAC REPLACEMENT
COMPTON UNIFIED SCHOOL DISTRICT
1101 S DWIGHT AVE.
COMPTON, CA 90220

LICENSED ARCHITECT — MARK GRAHAM C-20046 03-31-19 — STATE OF CALIFORNIA

REGISTERED PROFESSIONAL ENGINEER — RICARDO E. STEED No. 517229 6/30/18 — STATE OF CALIFORNIA

CONSULTANT

A&F ENGINEERING GROUP, INC.
9320 BASELINE RD., SUITE C, RANCHO CUCAMONGA, CA 91701
TEL. (909) 941-3008 FAX (909) 941-0211

DSA IDENTIFICATION STAMP
DIV. OF THE STATE ARCHITECT
OFFICE OF REGULATION SERVICES
APPL 03-118423
AC — FLS — SS — EY
DATE MAR 06 2018
FILE: 19-23

NO	DATE	BY	DESCRIPTION
			REVISIONS

DRAWN: LS | CHECKED: RES
DATE: 3/6/2018 | SCALE: AS NOTED
PROJECT NUMBER: 1723400

PANEL SCHEDULES

DRAWING NUMBER: E-0.3

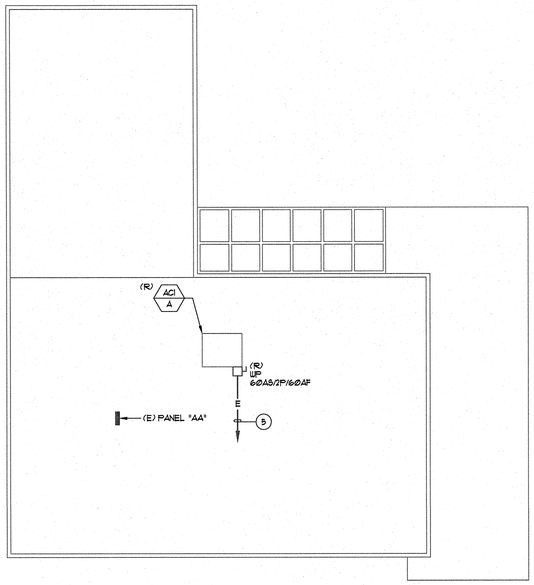

NORTH

BUILDING A - DEMOLITION ROOF PLAN | 1/8" = 1'-0" | 1

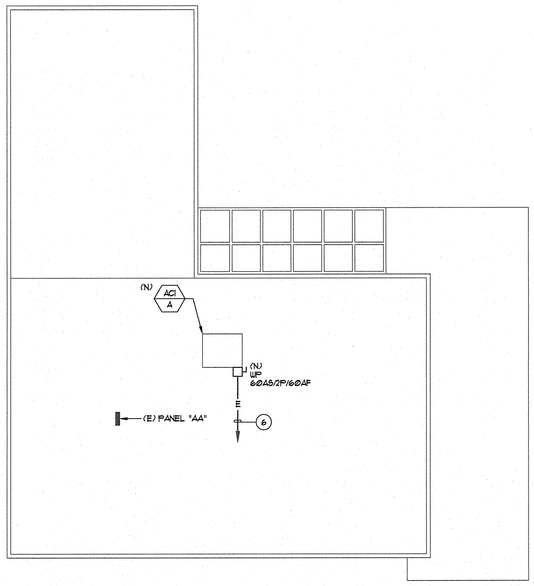

NORTH

BUILDING A - REMODEL ROOF PLAN | 1/8" = 1'-0" | 2

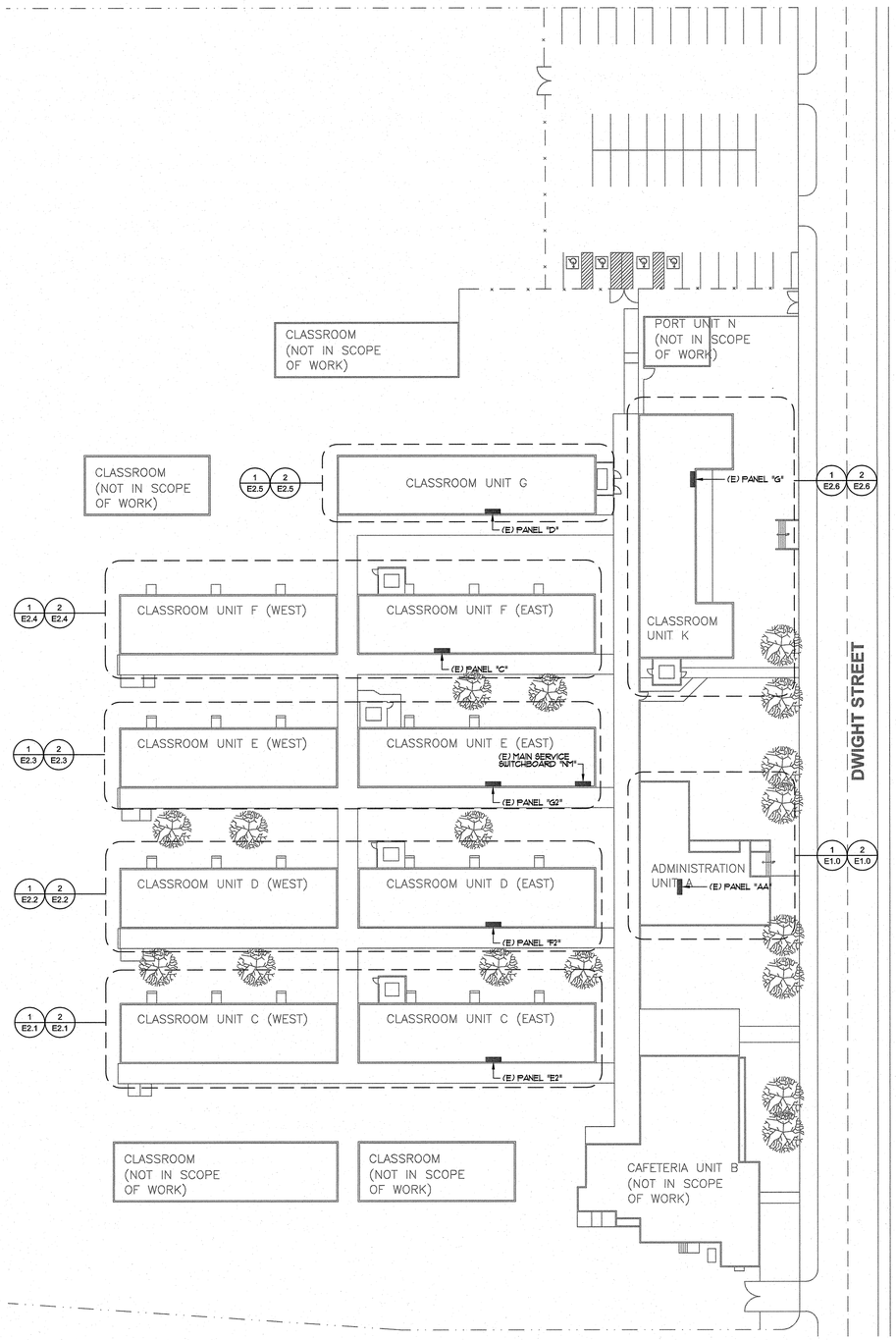

NORTH

SITE PLAN | 1" = 30'-0" | 3

PLAN NOTES:

1. REFER TO GENERAL NOTES AND DEMOLITION NOTES, DRAWING E-Ø1, FOR ADDITIONAL REQUIREMENTS.
2. IT SHALL BE THIS CONTRACTOR'S RESPONSIBILITY TO MAINTAIN REQUIRED CLEARANCES BETWEEN UNDERGROUND ELECTRICAL CONDUITS AND FOOTINGS. CONDUIT STUB-UPS SHALL NOT BE INSTALLED IN FOOTINGS, EXACT METHOD FOR STUBBING-UP CONDUITS AT FOOTING LOCATIONS SHALL BE COORDINATED IN THE FIELD WITH THE GENERAL CONTRACTOR AND THE ARCHITECT.
3. REFER TO SINGLE LINE DIAGRAM, DRAWING E-Ø2, FOR ADDITIONAL REQUIREMENTS.
4. THE CONTRACTOR SHALL NOTE THE DRAWINGS ARE DIAGRAMMATIC. EXACT ROUTING OF NEW CONDUITS AND LOCATION OF JUNCTION BOXES AND PULL BOXES SHALL BE COORDINATED AND DETERMINED IN THE FIELD. NEW CONDUIT, JUNCTION BOXES AND PULL BOXES SHALL BE ROUTED CONCEALED IN THE CEILING SPACE BELOW AND IN SUCH A MANNER AS TO AVOID INTERFERENCE WITH EXISTING BUILDING STRUCTURES, UTILITIES AND THE WORK BEING PERFORMED BY OTHER TRADES. NEW CONDUIT, JUNCTION AND PULL BOXES WILL NOT BE ALLOWED TO BE INSTALLED EXPOSED ON THE ROOF.
5. CONTRACTOR TO REMOVE AC UNIT AND DISCONNECT SWITCH ONLY. EXISTING CONDUIT AND CONDUCTORS TO BE USED TO ENERGIZE THE NEW ENERGY EFFICIENT AC UNIT. NO NEW LOAD INCREASE. REFER TO REMODEL PLAN FOR ADDITIONAL REQUIREMENTS.
6. CONTRACTOR TO CONNECT NEW AC UNIT TO THE EXISTING CONDUCTORS PREVIOUSLY FEEDING THE REMOVED AC UNIT. CONTRACTOR TO PROVIDE AND EXTEND NEW CONDUIT / CONDUCTORS AS REQUIRED TO ENSURE A FULLY OPERABLE AC UNIT UPON COMPLETION OF INSTALLATION.

WLC ARCHITECTS
CLIENT FOCUSED • PASSION DRIVEN

SOUTHERN CALIFORNIA
8163 ROCHESTER AVENUE, SUITE 100
RANCHO CUCAMONGA
CALIFORNIA 91730-0729
TEL: 909-987-0909
www.wlcarchitects.com

LONGFELLOW ELEMENTARY SCHOOL
HVAC REPLACEMENT
COMPTON UNIFIED SCHOOL DISTRICT
1101 S DWIGHT AVE.
COMPTON, CA 90220

LICENSED ARCHITECT MARK GRAHAM C-26046 03-31-19 STATE OF CALIFORNIA

REGISTERED PROFESSIONAL ENGINEER RICHARD E. STOTZER No. E17229 6/30/18 STATE OF CALIFORNIA

CONSULTANT
A&F ENGINEERING GROUP, INC.
9320 BASELINE RD., SUITE C, RANCHO CUCAMONGA, CA 91701
TEL. (909) 941-3008 FAX (909) 941-3211

IDENTIFICATION STAMP
DIV. OF THE STATE ARCHITECT
OFFICE OF REGULATION SERVICES
APPL 03-118423
FILE: 19-23
AC — FLS — SS EY
DATE MAR 0 6 2018

NO	DATE	BY	DESCRIPTION
			REVISIONS

DRAWN: LS	CHECKED: RES
DATE: 3/6/2018	SCALE: AS NOTED
PROJECT NUMBER: 1723400	

SITE PLAN

DRAWING NUMBER: E1.0

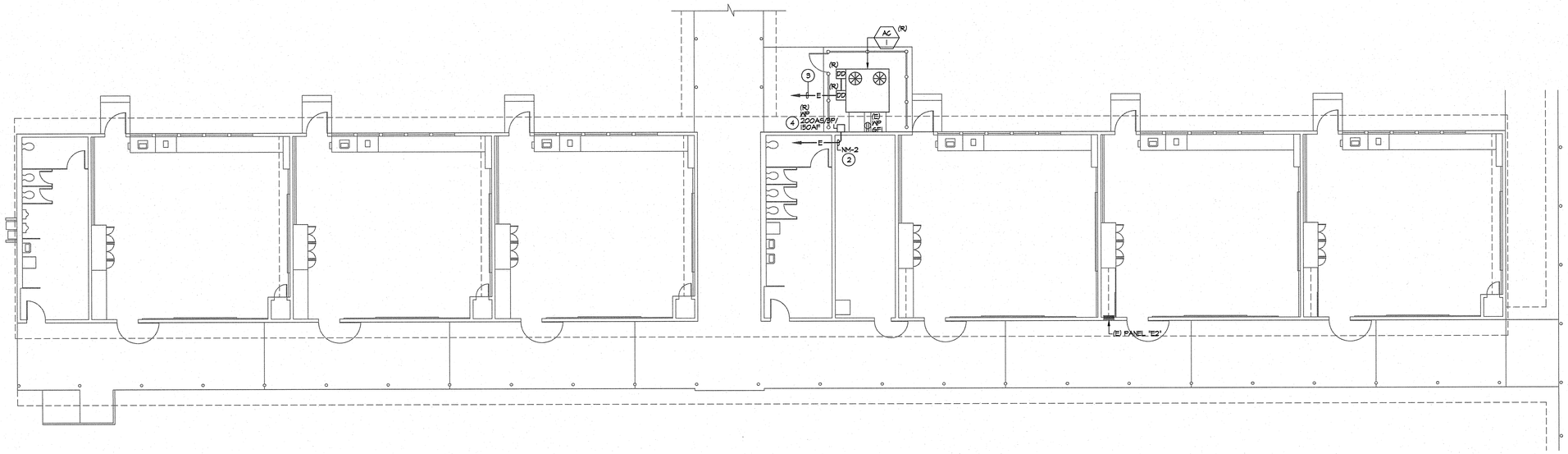

DEMOLITION NOTES:

1. REFER TO GENERAL NOTES AND DEMOLITION NOTES, DRAWING E.01, FOR ADDITIONAL REQUIREMENTS.
2. CONTRACTOR TO REMOVE AC UNIT AND DISCONNECT SWITCH ONLY. EXISTING CONDUIT AND CONDUCTORS TO BE USED TO ENERGIZE THE NEW AC UNIT. NO NEW LOAD INCREASE. REFER TO REMODEL PLAN FOR ADDITIONAL REQUIREMENTS.
3. CONTRACTOR TO REMOVE DUCT DETECTORS ONLY. EXISTING CONDUIT AND CONDUCTORS TO BE USED TO ENERGIZE THE NEW DUCT DETECTORS. REFER TO REMODEL PLAN FOR ADDITIONAL REQUIREMENTS.
4. CONTRACTOR TO REMOVE AC UNIT AND DISCONNECT SWITCH ONLY. HE SHALL PROVIDE A NEW 12"X12"X6" NEMA 3R PULL BOX IN ITS PLACE TO EXTEND NEW CONDUIT AND CONDUCTORS TO THE NEW DISCONNECT SWITCH LOCATION. REFER TO REMODEL PLAN FOR ADDITIONAL REQUIREMENTS.

NORTH

BUILDING C - DEMOLITION POWER PLAN | 1/8" = 1'-0" | 1

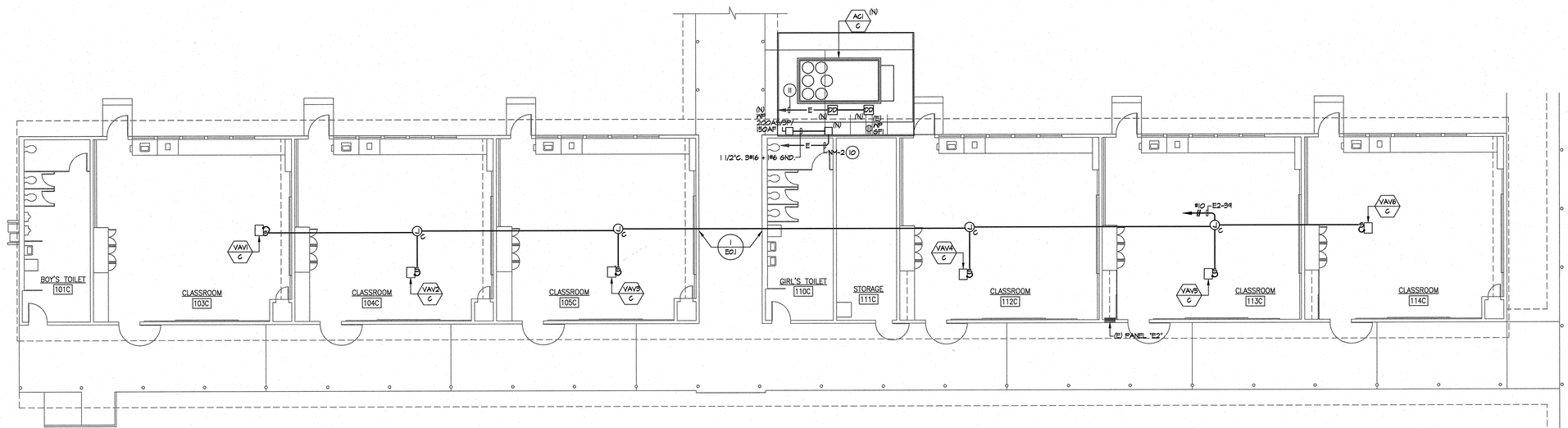

REMODEL NOTES:

1. REFER TO GENERAL NOTES AND DEMOLITION NOTES, DRAWING E.01, FOR ADDITIONAL REQUIREMENTS.
2. CONTRACTOR TO UPDATE PANEL DIRECTORY FOR ALL REMOVED AND ADDED HVAC EQUIPMENT.
3. THE CONTRACTOR SHALL NOTE THAT THE DRAWING IS DIAGRAMMATIC. EXACT ROUTING OF NEW CONDUITS AND LOCATION OF JUNCTION BOXES AND PULL BOXES SHALL BE COORDINATED AND DETERMINED IN THE FIELD. NEW CONDUIT, JUNCTION BOXES AND PULL BOXES SHALL BE ROUTED / PLACED IN SUCH A MANNER AS TO ADHERE TO ALL APPLICABLE CODES AND TO AVOID INTERFERENCE WITH EXISTING BUILDING STRUCTURES, UTILITIES AND THE WORK BEING PERFORMED BY OTHER TRADES. ALL EXTERIOR CONDUIT, FITTINGS, JUNCTION BOXES AND PULL BOXES TO BE WEATHER PROOF TYPE: NEMA 3R.
4. EXTERIOR MOUNTED DEVICES SHALL BE PROVIDED COMPLETE WITH WEATHERPROOF COVERS UL. LISTED FOR WET LOCATIONS WHEN IN USE. PLASTIC COVERS NOT ALLOWED.
5. CIRCUITS INDICATED ON THE PANEL SCHEDULES, WHETHER SHOWN ON THE DRAWING OR NOT, SHALL BE A PART OF THIS CONTRACT AND THE RESPONSIBILITY OF THE CONTRACTOR TO PROVIDE REQUIRED CONDUIT AND WIRE AS REQUIRED TO MEET THE INTENT OF THE PLANS AND SPECIFICATIONS.
6. SEE SINGLE LINE DIAGRAM, DRAWING E.02 FOR CONDUIT SIZE AND WIRE SIZE AND QUANTITIES REQUIRED FOR ALL ELECTRICAL EQUIPMENT.
7. THE CONTRACTOR SHALL PROVIDE AN UPDATED TYPED PANEL DIRECTORY FOR ALL PANELS WITHIN SCOPE OF WORK UPON COMPLETION OF WORK. HAND WRITTEN DIRECTORY NOT ALLOWED.
8. THE CONTRACTOR SHALL REFER TO THE MECHANICAL AND PLUMBING DRAWINGS FOR EXACT EQUIPMENT LOCATIONS AND ELECTRICAL CONNECTIONS REQUIREMENTS. CONTRACTOR SHALL PROVIDE ALL POWER AND CONTROL CONNECTIONS AS INDICATED ON THE MECHANICAL AND PLUMBING DRAWINGS.
9. ALL CIRCUITS SERVING THE REMODEL AREA, WHETHER IDENTIFIED ON PLAN OR NOT, SHALL BE TRACED AND IDENTIFIED PRIOR TO START OF THE DEMOLITION PHASE. CIRCUITS AFFECTED BY THE REMODEL THAT SERVE AREAS OF THE BUILDING THAT ARE NOT A PART OF THE REMODEL SHALL BE MAINTAINED IN OPERATION DURING THE CONSTRUCTION PHASE. INTERRUPTION OF SERVICE WILL NOT BE ALLOWED.
10. CONTRACTOR TO CONNECT NEW AC UNIT TO THE EXISTING CONDUCTORS PREVIOUSLY FEEDING THE REMOVED AC UNIT. CONTRACTOR TO PROVIDE AND EXTEND NEW CONDUIT / CONDUCTORS FROM THE NEW PULL BOX AS REQUIRED TO ENSURE A FULLY OPERABLE AC UNIT UPON COMPLETION OF INSTALLATION.
11. CONTRACTOR TO CONNECT NEW DUCT DETECTORS TO THE EXISTING CONDUIT

NORTH

BUILDING C - REMODEL POWER PLAN | 1/8" = 1'-0" | 2

ARCHITECTS
WLC
CLIENT FOCUSED • PASSION DRIVEN

SOUTHERN CALIFORNIA
8163 ROCHESTER AVENUE, SUITE 100
RANCHO CUCAMONGA
CALIFORNIA 91730-0729
TEL: 909-987-0909
www.wlcarchitects.com

LONGFELLOW ELEMENTARY SCHOOL
HVAC REPLACEMENT
COMPTON UNIFIED SCHOOL DISTRICT
1101 S DWIGHT AVE.
COMPTON, CA 90220

LICENSED ARCHITECT — MARK GRAHAM C-28046 03-31-19 — STATE OF CALIFORNIA
REGISTERED PROFESSIONAL ENGINEER — RICARDO E. SOTO No. E17229 6/30/18 — STATE OF CALIFORNIA

CONSULTANT
A&F ENGINEERING GROUP, INC.
9320 BASELINE RD., SUITE C, RANCHO CUCAMONGA, CA 91701
TEL. (909) 941-3006 FAX (909) 941-3211

IDENTIFICATION STAMP
DIV. OF THE STATE ARCHITECT
OFFICE OF REGULATION SERVICES
APPL 03-118423
AC FLS SS FY
DATE OCT 02 2018
FILE: 19-23

NO	DATE	BY	DESCRIPTION
			REVISIONS

DRAWN: LS	CHECKED: RES
DATE: 3/6/2018	SCALE: AS NOTED
PROJECT NUMBER: 1723400	

BUILDING C
DEMOLITION AND
REMODEL PLANS

DRAWING NUMBER: E2.1

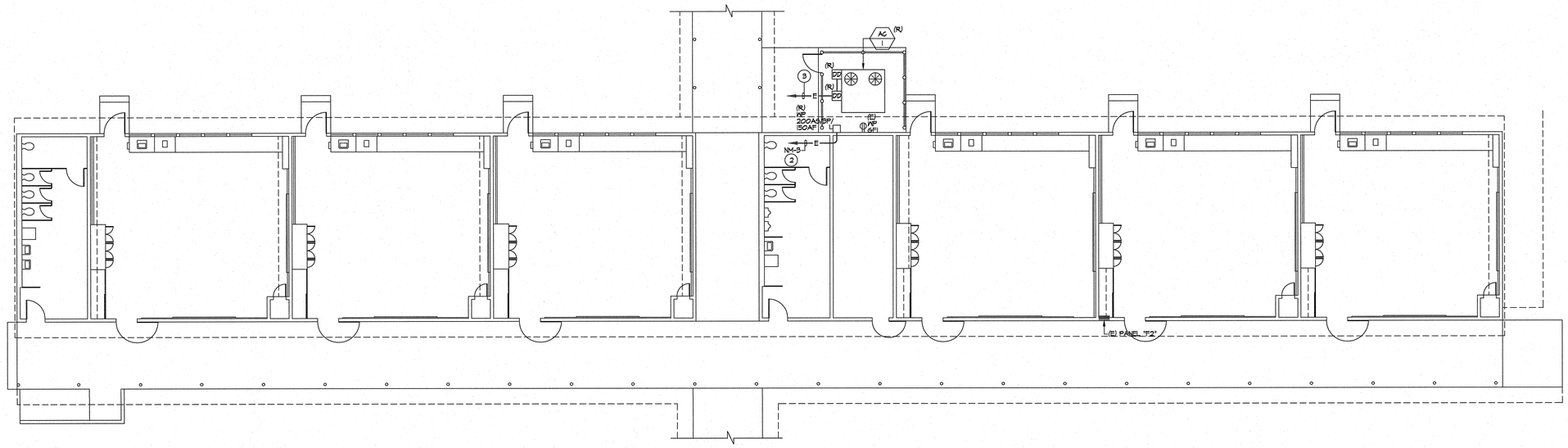

DEMOLITION NOTES:

1. REFER TO GENERAL NOTES AND DEMOLITION NOTES, DRAWING E.01, FOR ADDITIONAL REQUIREMENTS.
2. CONTRACTOR TO REMOVE AC UNIT AND DISCONNECT SWITCH ONLY. EXISTING CONDUIT AND CONDUCTORS TO BE USED TO ENERGIZE THE NEW AC UNIT. NO NEW LOAD INCREASE. REFER TO REMODEL PLAN FOR ADDITIONAL REQUIREMENTS.
3. CONTRACTOR TO REMOVE DUCT DETECTORS ONLY. EXISTING CONDUIT AND CONDUCTORS TO BE USED TO ENERGIZE THE NEW DUCT DETECTORS. REFER TO REMODEL PLAN FOR ADDITIONAL REQUIREMENTS.

NORTH

BUILDING D - DEMOLITION POWER PLAN — 1/8" = 1'-0" — 1

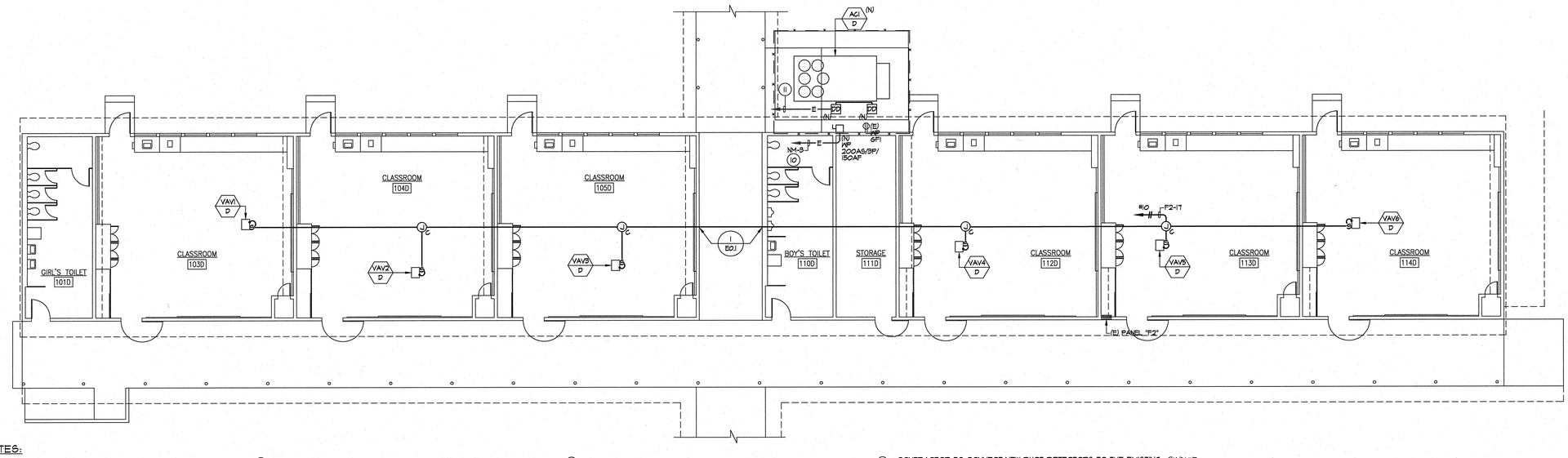

REMODEL NOTES:

1. REFER TO GENERAL NOTES AND DEMOLITION NOTES, DRAWING E.01, FOR ADDITIONAL REQUIREMENTS.
2. CONTRACTOR TO UPDATE PANEL DIRECTORY FOR ALL REMOVED AND ADDED HVAC EQUIPMENT.
3. THE CONTRACTOR SHALL NOTE THAT THE DRAWING IS DIAGRAMMATIC. EXACT ROUTING OF NEW CONDUITS AND LOCATION OF JUNCTION BOXES AND PULL BOXES SHALL BE COORDINATED AND DETERMINED IN THE FIELD. NEW CONDUIT, JUNCTION BOXES AND PULL BOXES SHALL BE ROUTED / PLACED IN SUCH A MANNER AS TO ADHERE TO ALL APPLICABLE CODES AND TO AVOID INTERFERENCE WITH EXISTING BUILDING STRUCTURES, UTILITIES AND THE WORK BEING PERFORMED BY OTHER TRADES. ALL EXTERIOR CONDUIT, FITTINGS, JUNCTION BOXES AND PULL BOXES TO BE WEATHER PROOF TYPE: NEMA 3R.
4. EXTERIOR MOUNTED DEVICES SHALL BE PROVIDED COMPLETE WITH WEATHERPROOF COVERS U.L. LISTED FOR WET LOCATIONS WHEN IN USE. PLASTIC COVERS NOT ALLOWED.
5. CIRCUITS INDICATED ON THE PANEL SCHEDULES, WHETHER SHOWN ON THE DRAWING OR NOT, SHALL BE A PART OF THIS CONTRACT AND THE RESPONSIBILITY OF THE CONTRACTOR TO PROVIDE REQUIRED CONDUIT AND WIRE AS REQUIRED TO MEET THE INTENT OF THE PLANS AND SPECIFICATIONS.
6. SEE SINGLE LINE DIAGRAM, DRAWING E.02 FOR CONDUIT SIZE AND WIRE SIZE AND QUANTITIES REQUIRED FOR ALL ELECTRICAL EQUIPMENT.
7. THE CONTRACTOR SHALL PROVIDE AN UPDATED TYPED PANEL DIRECTORY FOR ALL PANELS WITHIN SCOPE OF WORK UPON COMPLETION OF WORK. HAND WRITTEN DIRECTORY NOT ALLOWED.
8. THE CONTRACTOR SHALL REFER TO THE MECHANICAL AND PLUMBING DRAWINGS FOR EXACT EQUIPMENT LOCATIONS AND ELECTRICAL CONNECTIONS REQUIREMENTS. CONTRACTOR SHALL PROVIDE ALL POWER AND CONTROL CONNECTIONS AS INDICATED ON THE MECHANICAL AND PLUMBING DRAWINGS.
9. ALL CIRCUITS SERVING THE REMODEL AREA, WHETHER IDENTIFIED ON PLAN OR NOT, SHALL BE TRACED AND IDENTIFIED PRIOR TO START OF THE DEMOLITION PHASE. CIRCUITS AFFECTED BY THE REMODEL THAT SERVE AREAS OF THE BUILDING THAT ARE NOT A PART OF THE REMODEL SHALL BE MAINTAINED IN OPERATION DURING THE CONSTRUCTION PHASE. INTERRUPTION OF SERVICE WILL NOT BE ALLOWED.
10. CONTRACTOR TO CONNECT NEW AC UNIT TO THE EXISTING CONDUCTORS PREVIOUSLY FEEDING THE REMOVED AC UNIT. CONTRACTOR TO PROVIDE AND EXTEND NEW CONDUIT / CONDUCTORS AS REQUIRED TO ENSURE A FULLY OPERABLE AC UNIT UPON COMPLETION OF INSTALLATION.
11. CONTRACTOR TO CONNECT NEW DUCT DETECTORS TO THE EXISTING CONDUIT.

NORTH

BUILDING D - REMODEL POWER PLAN — 1/8" = 1'-0" — 2

ARCHITECTS
WLC
CLIENT FOCUSED • PASSION DRIVEN

SOUTHERN CALIFORNIA
8163 ROCHESTER AVENUE, SUITE 100
RANCHO CUCAMONGA
CALIFORNIA 91730-0729

TEL: 909-987-0909
www.wlcarchitects.com

LONGFELLOW ELEMENTARY SCHOOL HVAC REPLACEMENT

COMPTON UNIFIED SCHOOL DISTRICT

1101 S DWIGHT AVE.
COMPTON, CA 90220

LICENSED ARCHITECT — MARK GRAHAM — C-28046 — 03-31-19 — STATE OF CALIFORNIA

REGISTERED PROFESSIONAL ENGINEER — RICHARD E. STATEN — No. E17229 — 6/30/18 — STATE OF CALIFORNIA

CONSULTANT
A&F ENGINEERING GROUP, INC.
9320 BASELINE RD., SUITE C, RANCHO CUCAMONGA, CA 91701
TEL. (909) 941-3008 FAX (909) 941-3021

IDENTIFICATION STAMP
DSA OF THE STATE ARCHITECT
OFFICE OF REGULATION SERVICES
APPL 03-118423
FILE: 19-23
AC — FLS — SS EY
DATE 10/6/2018

NO	DATE	BY	DESCRIPTION
			REVISIONS

DRAWN: LS	CHECKED: RES
DATE: 3/6/2018	SCALE: AS NOTED
PROJECT NUMBER: 1723400	

BUILDING D
DEMOLITION AND
REMODEL PLANS

DRAWING NUMBER: E2.2

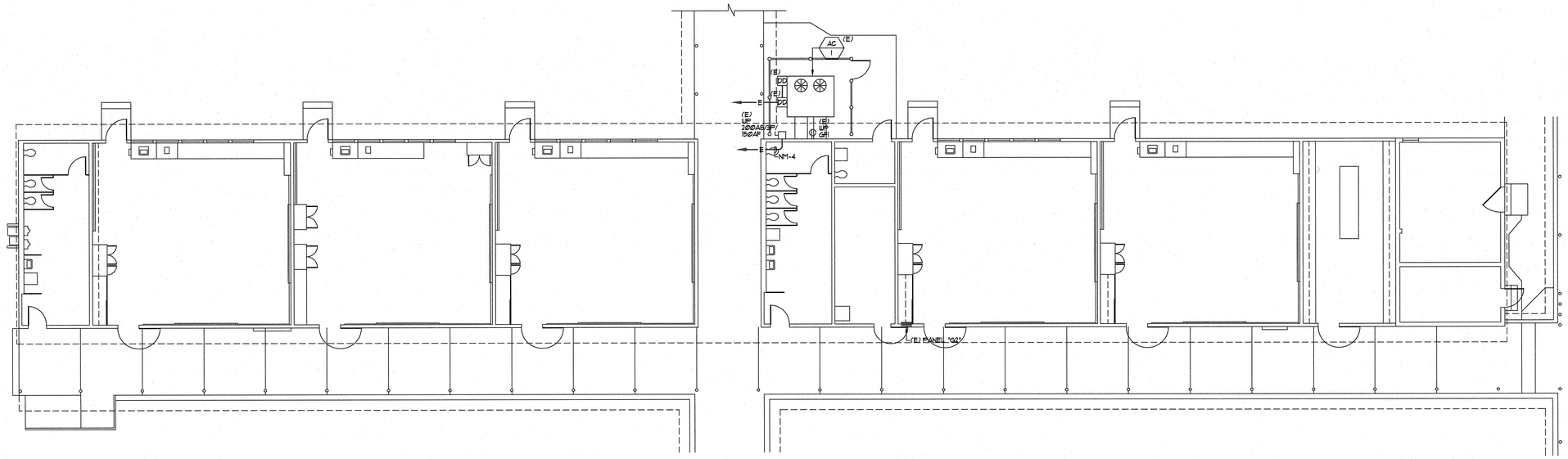

DEMOLITION NOTES:

1. REFER TO GENERAL NOTES AND DEMOLITION NOTES, DRAWING E.ØI, FOR ADDITIONAL REQUIREMENTS.

NORTH

BUILDING E - DEMOLITION POWER PLAN

1/8" = 1'-0" | 1

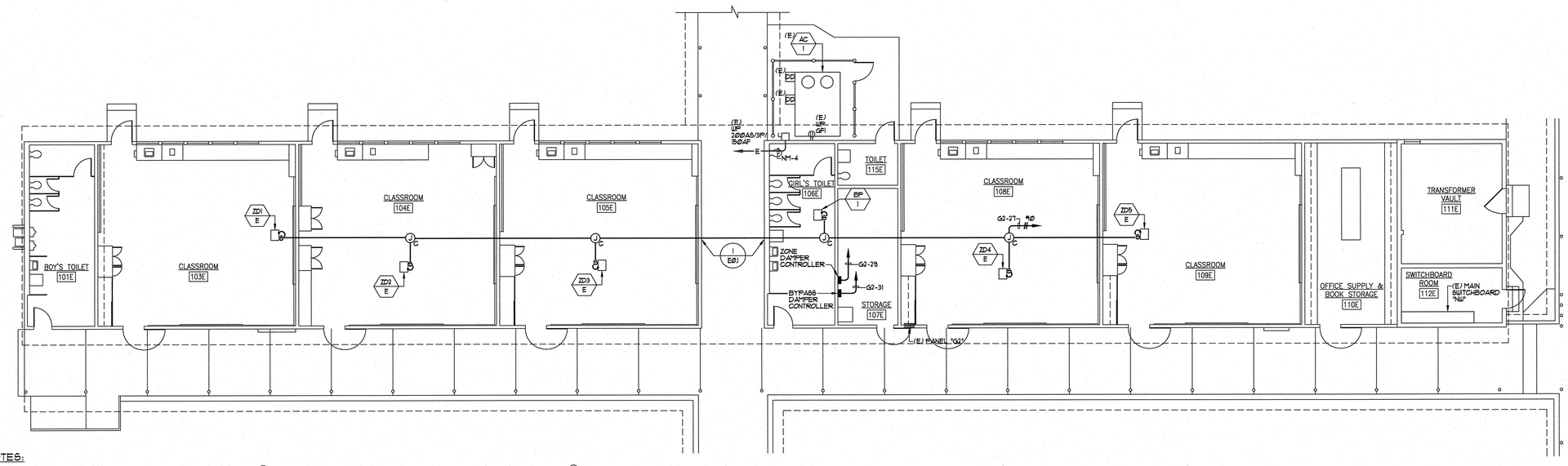

REMODEL NOTES:

1. REFER TO GENERAL NOTES AND DEMOLITION NOTES, DRAWING E.ØI, FOR ADDITIONAL REQUIREMENTS.
2. CONTRACTOR TO UPDATE PANEL DIRECTORY FOR ALL REMOVED AND ADDED HVAC EQUIPMENT.
3. THE CONTRACTOR SHALL NOTE THAT THE DRAWING IS DIAGRAMMATIC. EXACT ROUTING OF NEW CONDUITS AND LOCATION OF JUNCTION BOXES AND PULL BOXES SHALL BE COORDINATED AND DETERMINED IN THE FIELD. NEW CONDUIT, JUNCTION BOXES AND PULL BOXES SHALL BE ROUTED / PLACED IN SUCH A MANNER AS TO ADHERE TO ALL APPLICABLE CODES AND TO AVOID INTERFERENCE WITH EXISTING BUILDING STRUCTURES, UTILITIES AND THE WORK BEING PERFORMED BY OTHER TRADES. ALL EXTERIOR CONDUIT, FITTINGS, JUNCTION BOXES AND PULL BOXES TO BE WEATHER PROOF TYPE: NEMA 3R.
4. EXTERIOR MOUNTED DEVICES SHALL BE PROVIDED COMPLETE WITH WEATHERPROOF COVERS UL. LISTED FOR WET LOCATIONS WHEN IN USE. PLASTIC COVERS NOT ALLOWED.
5. CIRCUITS INDICATED ON THE PANEL SCHEDULES, WHETHER SHOWN ON THE DRAWING OR NOT, SHALL BE A PART OF THIS CONTRACT AND THE RESPONSIBILITY OF THE CONTRACTOR TO PROVIDE REQUIRED CONDUIT AND WIRE AS REQUIRED TO MEET THE INTENT OF THE PLANS AND SPECIFICATIONS.
6. SEE SINGLE LINE DIAGRAM, DRAWING E.ØØ2 FOR CONDUIT SIZE AND WIRE SIZE AND QUANTITIES REQUIRED FOR ALL ELECTRICAL EQUIPMENT.
7. THE CONTRACTOR SHALL PROVIDE AN UPDATED TYPED PANEL DIRECTORY FOR ALL PANELS WITHIN SCOPE OF WORK UPON COMPLETION OF WORK HAND WRITTEN DIRECTORY NOT ALLOWED.
8. THE CONTRACTOR SHALL REFER TO THE MECHANICAL AND PLUMBING DRAWINGS FOR EXACT EQUIPMENT LOCATIONS AND ELECTRICAL CONNECTIONS REQUIREMENTS. CONTRACTOR SHALL PROVIDE ALL POWER AND CONTROL CONNECTIONS AS INDICATED ON THE MECHANICAL AND PLUMBING DRAWINGS.
9. ALL CIRCUITS SERVING THE REMODEL AREA, WHETHER IDENTIFIED ON PLAN OR NOT SHALL BE TRACED AND IDENTIFIED PRIOR TO START OF THE DEMOLITION PHASE. CIRCUITS AFFECTED BY THE REMODEL THAT SERVE AREAS OF THE BUILDING THAT ARE NOT A PART OF THE REMODEL SHALL BE MAINTAINED IN OPERATION DURING THE CONSTRUCTION PHASE. INTERRUPTION OF SERVICE WILL NOT BE ALLOWED.

NORTH

BUILDING E - REMODEL POWER PLAN

1/8" = 1'-0" | 2

ARCHITECTS
WLC
CLIENT FOCUSED • PASSION DRIVEN

SOUTHERN CALIFORNIA
8163 ROCHESTER AVENUE, SUITE 100
RANCHO CUCAMONGA
CALIFORNIA 91730-0729
TEL: 909-987-0909
www.wlcarchitects.com

LONGFELLOW ELEMENTARY SCHOOL
HVAC REPLACEMENT
COMPTON UNIFIED SCHOOL DISTRICT
1101 S DWIGHT AVE.
COMPTON, CA 90220

LICENSED ARCHITECT — MARK GRAHAM — C-26046 — 03-31-19 — STATE OF CALIFORNIA

REGISTERED PROFESSIONAL ENGINEER — ORLANDO L. STOTO — No. E17229 — 6/30/18 — STATE OF CALIFORNIA

CONSULTANT
A&P ENGINEERING GROUP, INC.
8200 HAVEN AVE. SUITE C, RANCHO CUCAMONGA, CA 91701
TEL: (909) 941-3000 FAX (909) 941-8211

IDENTIFICATION STAMP
DIV. OF THE STATE ARCHITECT
OFFICE OF REGULATION SERVICES
APPL 03-118423
AC — FLS — SS
DATE 8/13 07 6 2018
FILE: 19-23

NO	DATE	BY	DESCRIPTION
1			REVISIONS

DRAWN: LS	CHECKED: RES
DATE: 3/6/2018	SCALE: AS NOTED
PROJECT NUMBER: 1723400	

BUILDING E
DEMOLITION AND
REMODEL PLANS

DRAWING NUMBER: E2.3

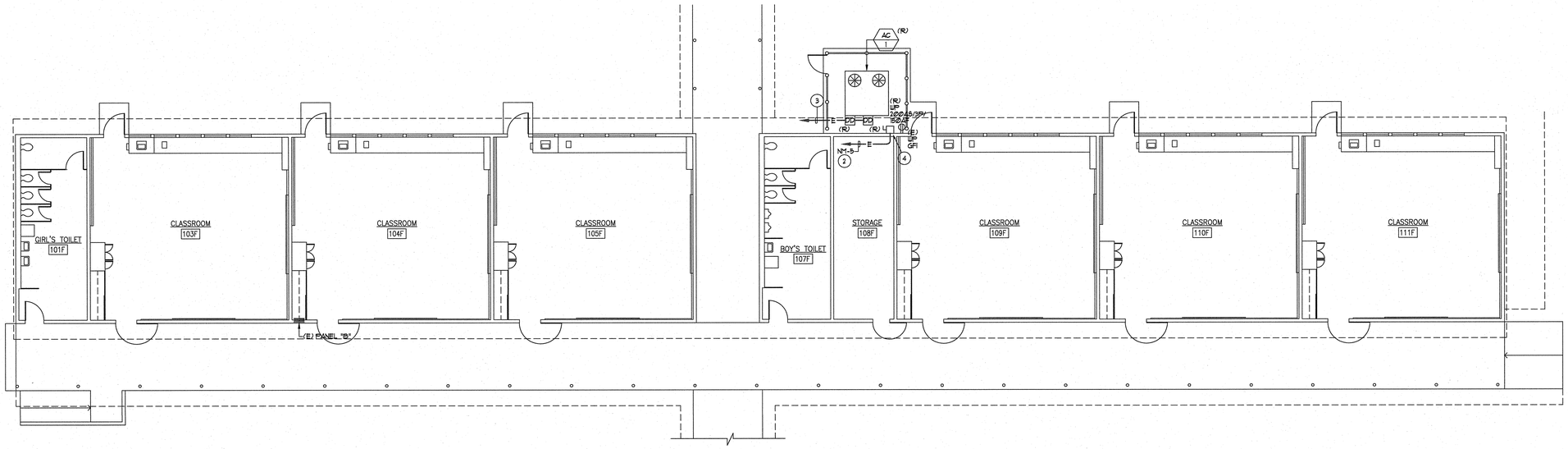

DEMOLITION NOTES:

1. REFER TO GENERAL NOTES AND DEMOLITION NOTES, DRAWING E.01, FOR ADDITIONAL REQUIREMENTS.
2. CONTRACTOR TO REMOVE AC UNIT AND DISCONNECT SWITCH ONLY. EXISTING CONDUIT AND CONDUCTORS TO BE USED TO ENERGIZE THE NEW AC UNIT. NO NEW LOAD INCREASE. REFER TO REMODEL PLAN FOR ADDITIONAL REQUIREMENTS.
3. CONTRACTOR TO REMOVE DUCT DETECTORS ONLY. EXISTING CONDUIT AND CONDUCTORS TO BE USED TO ENERGIZE THE NEW DUCT DETECTORS. REFER TO REMODEL PLAN FOR ADDITIONAL REQUIREMENTS.
4. CONTRACTOR TO REMOVE AC UNIT AND DISCONNECT SWITCH ONLY. HE SHALL PROVIDE A NEW 12"X12"X6" NEMA 3R PULL BOX IN ITS PLACE TO EXTEND NEW CONDUIT AND CONDUCTORS TO THE NEW DISCONNECT SWITCH LOCATION. REFER TO REMODEL PLAN FOR ADDITIONAL REQUIREMENTS.

NORTH

BUILDING F - DEMOLITION POWER PLAN

1/8" = 1'-0" | 1

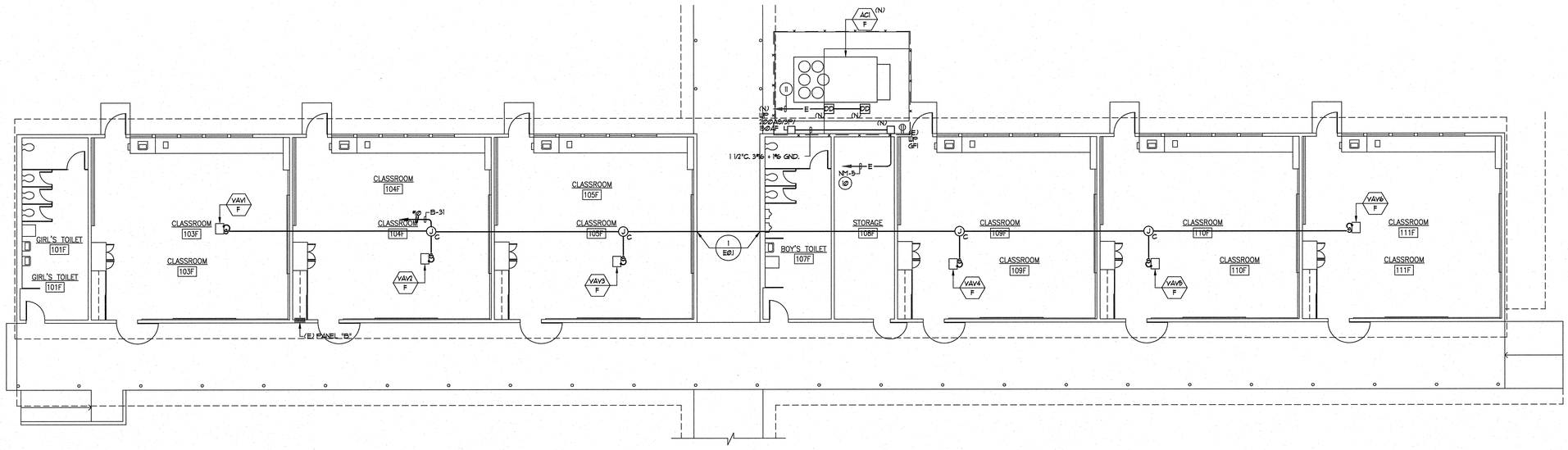

REMODEL NOTES:

1. REFER TO GENERAL NOTES AND DEMOLITION NOTES, DRAWING E.01, FOR ADDITIONAL REQUIREMENTS.
2. CONTRACTOR TO UPDATE PANEL DIRECTORY FOR ALL REMOVED AND ADDED HVAC EQUIPMENT.
3. THE CONTRACTOR SHALL NOTE THAT THE DRAWING IS DIAGRAMMATIC. EXACT ROUTING OF NEW CONDUITS AND LOCATION OF JUNCTION BOXES AND PULL BOXES SHALL BE COORDINATED AND DETERMINED IN THE FIELD. NEW CONDUIT, JUNCTION BOXES AND PULL BOXES SHALL BE ROUTED / PLACED IN SUCH A MANNER AS TO ADHERE TO ALL APPLICABLE CODES AND TO AVOID INTERFERENCE WITH EXISTING BUILDING STRUCTURES, UTILITIES AND THE WORK BEING PERFORMED BY OTHER TRADES. ALL EXTERIOR CONDUIT, FITTINGS, JUNCTION BOXES AND PULL BOXES TO BE WEATHER PROOF TYPE: NEMA 3R.
4. EXTERIOR MOUNTED DEVICES SHALL BE PROVIDED COMPLETE WITH WEATHERPROOF COVERS U.L. LISTED FOR WET LOCATIONS WHEN IN USE. PLASTIC COVERS NOT ALLOWED.
5. CIRCUITS INDICATED ON THE PANEL SCHEDULES, WHETHER SHOWN ON THE DRAWING OR NOT, SHALL BE A PART OF THIS CONTRACT AND THE RESPONSIBILITY OF THE CONTRACTOR TO PROVIDE REQUIRED CONDUIT AND WIRE AS REQUIRED TO MEET THE INTENT OF THE PLANS AND SPECIFICATIONS.
6. SEE SINGLE LINE DIAGRAM, DRAWING E.02 FOR CONDUIT SIZE AND WIRE SIZE AND QUANTITIES REQUIRED FOR ALL ELECTRICAL EQUIPMENT.
7. THE CONTRACTOR SHALL PROVIDE AN UPDATED TYPED PANEL DIRECTORY FOR ALL PANELS WITHIN SCOPE OF WORK UPON COMPLETION OF WORK. HAND WRITTEN DIRECTORY NOT ALLOWED.
8. THE CONTRACTOR SHALL REFER TO THE MECHANICAL AND PLUMBING DRAWINGS FOR EXACT EQUIPMENT LOCATIONS AND ELECTRICAL CONNECTIONS REQUIREMENTS. CONTRACTOR SHALL PROVIDE ALL POWER AND CONTROL CONNECTIONS AS INDICATED ON THE MECHANICAL AND PLUMBING DRAWINGS.
9. ALL CIRCUITS SERVING THE REMODEL AREA, WHETHER IDENTIFIED ON PLAN OR NOT, SHALL BE TRACED AND IDENTIFIED PRIOR TO START OF THE DEMOLITION PHASE. CIRCUITS AFFECTED BY THE REMODEL THAT SERVE AREAS OF THE BUILDING THAT ARE NOT A PART OF THE REMODEL SHALL BE MAINTAINED IN OPERATION DURING THE CONSTRUCTION PHASE. INTERRUPTION OF SERVICE WILL NOT BE ALLOWED.
10. CONTRACTOR TO CONNECT NEW AC UNIT TO THE EXISTING CONDUCTORS PREVIOUSLY FEEDING THE REMOVED AC UNIT. CONTRACTOR TO PROVIDE AND EXTEND NEW CONDUIT / CONDUCTORS FROM THE NEW PULL BOX AS REQUIRED TO ENSURE A FULLY OPERABLE AC UNIT UPON COMPLETION OF INSTALLATION.
11. CONTRACTOR TO CONNECT NEW DUCT DETECTORS TO THE EXISTING CONDUIT (

NORTH

BUILDING F - REMODEL POWER PLAN

1/8" = 1'-0" | 2

WLC ARCHITECTS
CLIENT FOCUSED • PASSION DRIVEN

SOUTHERN CALIFORNIA
8163 ROCHESTER AVENUE, SUITE 100
RANCHO CUCAMONGA
CALIFORNIA 91730-0729
TEL: 909-987-0909
www.wlcarchitects.com

LONGFELLOW ELEMENTARY SCHOOL
HVAC REPLACEMENT
COMPTON UNIFIED SCHOOL DISTRICT
1101 S DWIGHT AVE.
COMPTON, CA 90220

LICENSED ARCHITECT MARK GRAHAM C-26046 03-31-19 STATE OF CALIFORNIA

REGISTERED PROFESSIONAL ENGINEER ISLANDO E. SOTELO No. E17229 6/30/18 STATE OF CALIFORNIA

CONSULTANT
A&F ENGINEERING GROUP, INC.
9320 BASELINE RD., SUITE C, RANCHO CUCAMONGA, CA 91701
TEL: (909) 941-3008 FAX (909) 941-8211

IDENTIFICATION STAMP
DIV. OF THE STATE ARCHITECT
OFFICE OF REGULATION SERVICES
APPL 03-118423
AC — FLS — SS EY
DATE 10/3 0/5 2018
FILE: 19-23

NO	DATE	BY	DESCRIPTION
1			REVISIONS

DRAWN: LS	CHECKED: RES
DATE: 3/6/2018	SCALE: AS NOTED
PROJECT NUMBER: 1723400	

BUILDING F DEMOLITION AND REMODEL PLANS

DRAWING NUMBER: **E2.4**

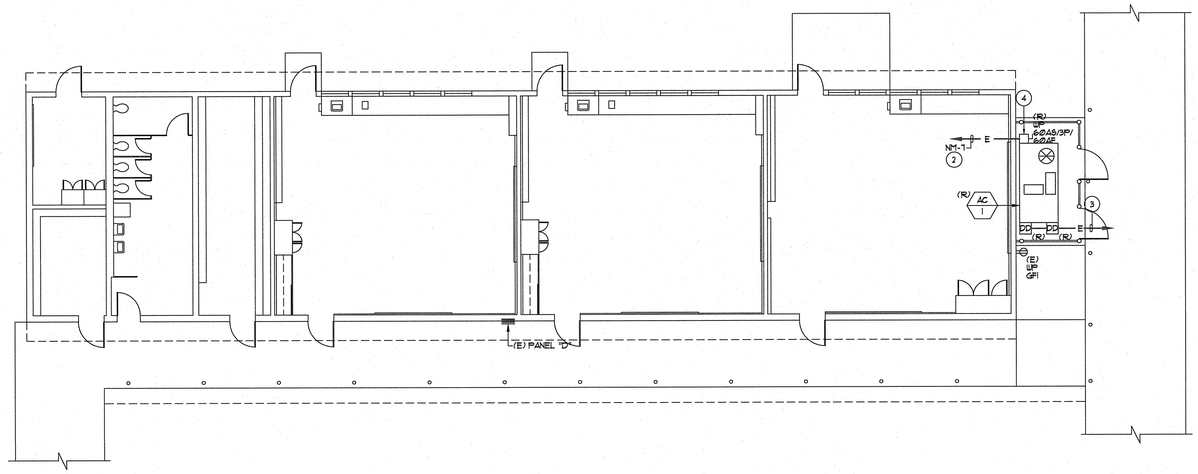

DEMOLITION NOTES:

1. REFER TO GENERAL NOTES AND DEMOLITION NOTES, DRAWING E.01, FOR ADDITIONAL REQUIREMENTS.
2. CONTRACTOR TO REMOVE AC UNIT AND DISCONNECT SWITCH ONLY. EXISTING CONDUIT AND CONDUCTORS TO BE USED TO ENERGIZE THE NEW AC UNIT. NO NEW LOAD INCREASE. REFER TO REMODEL PLAN FOR ADDITIONAL REQUIREMENTS.
3. CONTRACTOR TO REMOVE DUCT DETECTORS ONLY. HE SHALL PROVIDE A NEW 12"X12"X6" NEMA 3R PULL BOX IN ITS PLACE TO EXTEND NEW CONDUIT AND CONDUCTORS TO THE NEW DUCT DETECTOR LOCATION. REFER TO REMODEL PLAN FOR ADDITIONAL REQUIREMENTS.
4. CONTRACTOR TO REMOVE AC UNIT AND DISCONNECT SWITCH ONLY. HE SHALL PROVIDE A NEW 12"X12"X6" NEMA 3R PULL BOX IN ITS PLACE TO EXTEND NEW CONDUIT AND CONDUCTORS TO THE NEW DISCONNECT SWITCH LOCATION. REFER TO REMODEL PLAN FOR ADDITIONAL REQUIREMENTS.

NORTH

BUILDING G - DEMOLITION POWER PLAN | 1/8" = 1'-0" | 1

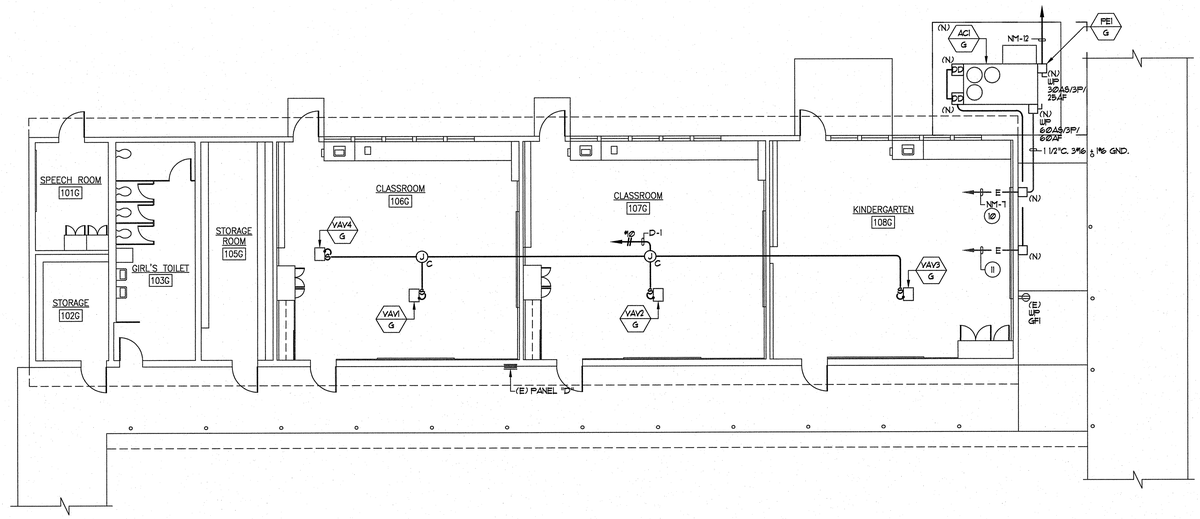

REMODEL NOTES:

1. REFER TO GENERAL NOTES AND DEMOLITION NOTES, DRAWING E.01, FOR ADDITIONAL REQUIREMENTS.
2. CONTRACTOR TO UPDATE PANEL DIRECTORY FOR ALL REMOVED AND ADDED HVAC EQUIPMENT.
3. THE CONTRACTOR SHALL NOTE THAT THE DRAWING IS DIAGRAMMATIC. EXACT ROUTING OF NEW CONDUITS AND LOCATION OF JUNCTION BOXES AND PULL BOXES SHALL BE COORDINATED AND DETERMINED IN THE FIELD. NEW CONDUIT, JUNCTION BOXES AND PULL BOXES SHALL BE ROUTED / PLACED IN SUCH A MANNER AS TO ADHERE TO ALL APPLICABLE CODES AND TO AVOID INTERFERENCE WITH EXISTING BUILDING STRUCTURES, UTILITIES AND THE WORK BEING PERFORMED BY OTHER TRADES. ALL EXTERIOR CONDUIT, FITTINGS, JUNCTION BOXES AND PULL BOXES TO BE WEATHER PROOF TYPE: NEMA 3R.
4. EXTERIOR MOUNTED DEVICES SHALL BE PROVIDED COMPLETE WITH WEATHERPROOF COVERS U.L. LISTED FOR WET LOCATIONS WHEN IN USE. PLASTIC COVERS NOT ALLOWED.
5. CIRCUITS INDICATED ON THE PANEL SCHEDULES, WHETHER SHOWN ON THE DRAWING OR NOT, SHALL BE A PART OF THIS CONTRACT AND THE RESPONSIBILITY OF THE CONTRACTOR TO PROVIDE REQUIRED CONDUIT AND WIRE AS REQUIRED TO MEET THE INTENT OF THE PLANS AND SPECIFICATIONS.
6. SEE SINGLE LINE DIAGRAM, DRAWING E.02 FOR CONDUIT SIZE AND WIRE SIZE AND QUANTITIES REQUIRED FOR ALL ELECTRICAL EQUIPMENT.
7. THE CONTRACTOR SHALL PROVIDE AN UPDATED TYPED PANEL DIRECTORY FOR ALL PANELS WITHIN SCOPE OF WORK UPON COMPLETION OF WORK. HAND WRITTEN DIRECTORY NOT ALLOWED.
8. THE CONTRACTOR SHALL REFER TO THE MECHANICAL AND PLUMBING DRAWINGS FOR EXACT EQUIPMENT LOCATIONS AND ELECTRICAL CONNECTIONS REQUIREMENTS. CONTRACTOR SHALL PROVIDE ALL POWER AND CONTROL CONNECTIONS AS INDICATED ON THE MECHANICAL AND PLUMBING DRAWINGS.
9. ALL CIRCUITS SERVING THE REMODEL AREA, WHETHER IDENTIFIED ON PLAN OR NOT, SHALL BE TRACED AND IDENTIFIED PRIOR TO START OF THE DEMOLITION PHASE. CIRCUITS AFFECTED BY THE REMODEL THAT SERVE AREAS OF THE BUILDING THAT ARE NOT A PART OF THE REMODEL SHALL BE MAINTAINED IN OPERATION DURING THE CONSTRUCTION PHASE. INTERRUPTION OF SERVICE WILL NOT BE ALLOWED.
10. CONTRACTOR TO CONNECT NEW AC UNIT TO THE EXISTING CONDUCTORS PREVIOUSLY FEEDING THE REMOVED AC UNIT. CONTRACTOR TO PROVIDE AND EXTEND NEW CONDUIT / CONDUCTORS FROM THE NEW PULL BOX AS REQUIRED TO ENSURE A FULLY OPERABLE AC UNIT UPON COMPLETION OF INSTALLATION.
11. CONTRACTOR TO CONNECT NEW DUCT DETECTORS TO THE EXISTING CONDUIT (

NORTH

BUILDING G - REMODEL POWER PLAN | 1/8" = 1'-0" | 2

ARCHITECTS
WLC
CLIENT FOCUSED • PASSION DRIVEN

SOUTHERN CALIFORNIA
8163 ROCHESTER AVENUE, SUITE 100
RANCHO CUCAMONGA
CALIFORNIA 91730-0729
TEL: 909-987-0909
www.wlcarchitects.com

LONGFELLOW ELEMENTARY SCHOOL HVAC REPLACEMENT

COMPTON UNIFIED SCHOOL DISTRICT
1101 S DWIGHT AVE.
COMPTON, CA 90220

LICENSED ARCHITECT — MARK GRAHAM — C-26046 — 03-31-19 — STATE OF CALIFORNIA
REGISTERED PROFESSIONAL ENGINEER — ROLANDO L. SORIANO — No. 51729 — 6/30/19 — STATE OF CALIFORNIA

CONSULTANT
A&P ENGINEERING GROUP, INC.
9320 BASELINE RD. SUITE C, RANCHO CUCAMONGA, CA 91701
TEL: (909) 941-3006 FAX (909) 941-9251

IDENTIFICATION STAMP
DIV. OF THE STATE ARCHITECT
OFFICE OF REGULATION SERVICES
APPL 03-118423
FILE: 19-23
AC — FLS — SS — EY
DATE — MAR 0 6 2019

NO	DATE	BY	DESCRIPTION
1			REVISIONS

DRAWN: LS	CHECKED: RES
DATE: 3/6/2018	SCALE: AS NOTED
PROJECT NUMBER: 1723400	

BUILDING G
DEMOLITION AND
REMODEL PLANS

DRAWING NUMBER: E2.5

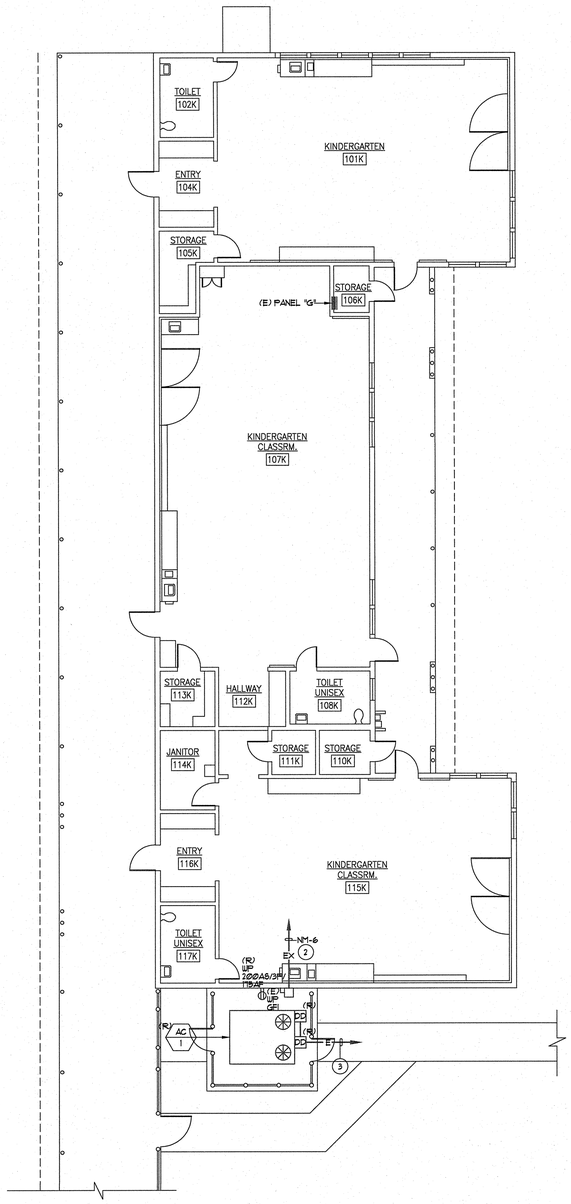

PLAN NOTES:

1. REFER TO GENERAL NOTES AND DEMOLITION NOTES, DRAWING E.01, FOR ADDITIONAL REQUIREMENTS.
2. CONTRACTOR TO REMOVE AC UNIT, CONDUCTORS AND DISCONNECT SWITCH. EXISTING CONDUIT TO REMAIN AND BE USED TO ROUTE NEW CONDUCTORS TO ENERGIZE THE NEW AC UNIT. REFER TO REMODEL PLAN FOR ADDITIONAL REQUIREMENTS.
3. CONTRACTOR TO REMOVE DUCT DETECTORS ONLY. EXISTING CONDUIT AND CONDUCTORS TO BE USED TO ENERGIZE THE NEW DUCT DETECTORS. REFER TO REMODEL PLAN FOR ADDITIONAL REQUIREMENTS.

NORTH

BUILDING K - DEMOLITION POWER PLAN

1/8" = 1'-0" | 1

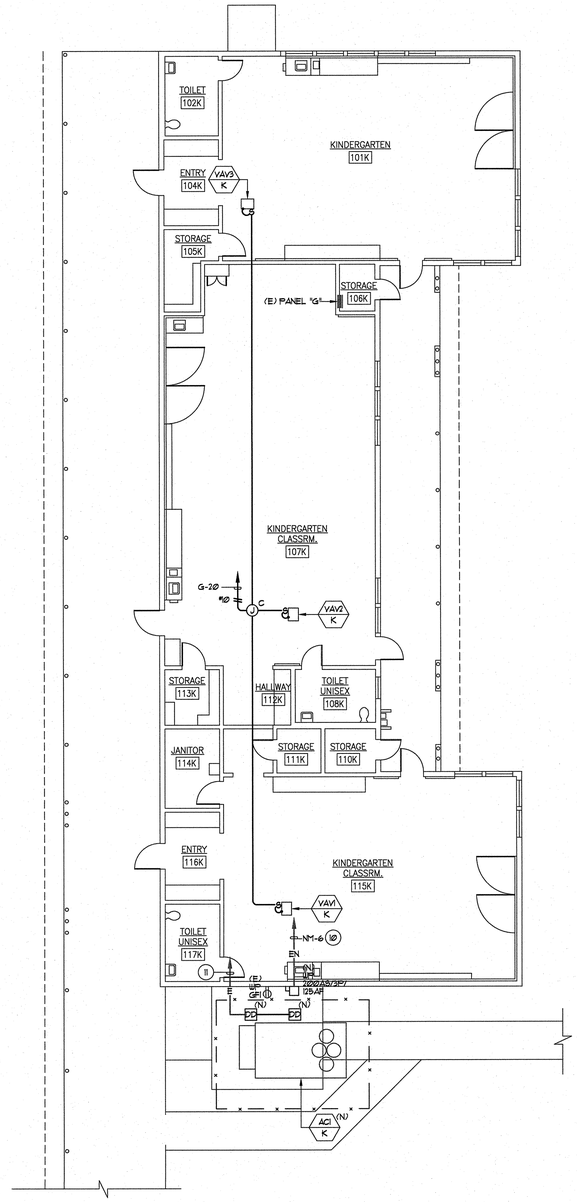

PLAN NOTES:

1. REFER TO GENERAL NOTES AND DEMOLITION NOTES, DRAWING E.01, FOR ADDITIONAL REQUIREMENTS.
2. CONTRACTOR TO UPDATE PANEL DIRECTORY FOR ALL REMOVED AND ADDED HVAC EQUIPMENT.
3. THE CONTRACTOR SHALL NOTE THAT THE DRAWING IS DIAGRAMMATIC. EXACT ROUTING OF NEW CONDUITS AND LOCATION OF JUNCTION BOXES AND PULL BOXES SHALL BE COORDINATED AND DETERMINED IN THE FIELD. NEW CONDUIT, JUNCTION BOXES AND PULL BOXES SHALL BE ROUTED / PLACED IN SUCH A MANNER AS TO ADHERE TO ALL APPLICABLE CODES AND TO AVOID INTERFERENCE WITH EXISTING BUILDING STRUCTURES, UTILITIES AND THE WORK BEING PERFORMED BY OTHER TRADES. ALL EXTERIOR CONDUIT, FITTINGS, JUNCTION BOXES AND PULL BOXES TO BE WEATHER PROOF TYPE: NEMA 3R.
4. EXTERIOR MOUNTED DEVICES SHALL BE PROVIDED COMPLETE WITH WEATHERPROOF COVERS ULL LISTED FOR WET LOCATIONS WHEN IN USE. PLASTIC COVERS NOT ALLOWED.
5. CIRCUITS INDICATED ON THE PANEL SCHEDULES, WHETHER SHOWN ON THE DRAWING OR NOT, SHALL BE A PART OF THIS CONTRACT AND THE RESPONSIBILITY OF THE CONTRACTOR TO PROVIDE REQUIRED CONDUIT AND WIRE AS REQUIRED TO MEET THE INTENT OF THE PLANS AND SPECIFICATIONS.
6. SEE SINGLE LINE DIAGRAM, DRAWING E.02 FOR CONDUIT SIZE AND WIRE SIZE AND QUANTITIES REQUIRED FOR ALL ELECTRICAL EQUIPMENT.
7. THE CONTRACTOR SHALL PROVIDE AN UPDATED TYPED PANEL DIRECTORY FOR ALL PANELS WITHIN SCOPE OF WORK UPON COMPLETION OF WORK. HAND WRITTEN DIRECTORY NOT ALLOWED.
8. THE CONTRACTOR SHALL REFER TO THE MECHANICAL AND PLUMBING DRAWINGS FOR EXACT EQUIPMENT LOCATIONS AND ELECTRICAL CONNECTIONS REQUIREMENTS. CONTRACTOR SHALL PROVIDE ALL POWER AND CONTROL CONNECTIONS AS INDICATED ON THE MECHANICAL AND PLUMBING DRAWINGS.
9. ALL CIRCUITS SERVING THE REMODEL AREA, WHETHER IDENTIFIED ON PLAN OR NOT SHALL BE TRACED AND IDENTIFIED PRIOR TO START OF THE DEMOLITION PHASE. CIRCUITS AFFECTED BY THE REMODEL THAT SERVE AREAS OF THE BUILDING THAT ARE NOT A PART OF THE REMODEL SHALL BE MAINTAINED IN OPERATION DURING THE CONSTRUCTION PHASE. INTERRUPTION OF SERVICE WILL NOT BE ALLOWED.
10. CONTRACTOR TO ROUTE NEW CONDUCTORS WITHIN THE EXISTING CONDUIT PREVIOUSLY ROUTED TO THE REMOVED AC UNIT. CONTRACTOR TO PROVIDE AND EXTEND NEW CONDUIT AS REQUIRED TO ENSURE A FULLY OPERABLE AC UNIT UPON COMPLETION OF INSTALLATION.
11. CONTRACTOR TO CONNECT NEW DUCT DETECTORS TO THE EXISTING CONDUIT

NORTH

BUILDING K - REMODEL POWER PLAN

1/8" = 1'-0" | 2

ARCHITECTS
WLC
CLIENT FOCUSED • PASSION DRIVEN

SOUTHERN CALIFORNIA
8163 ROCHESTER AVENUE, SUITE 100
RANCHO CUCAMONGA
CALIFORNIA 91730-0729
TEL: 909-987-0909
www.wlcarchitects.com

LONGFELLOW ELEMENTARY SCHOOL
HVAC REPLACEMENT
COMPTON UNIFIED SCHOOL DISTRICT
1101 S DWIGHT AVE.
COMPTON, CA 90220

LICENSED ARCHITECT
MARK GRAHAM
C-26046
03-31-19
STATE OF CALIFORNIA

REGISTERED PROFESSIONAL ENGINEER
RICHARD E. SOTELO
No. E17328
6/30/18
STATE OF CALIFORNIA

CONSULTANT
A&P ENGINEERING GROUP, INC.
9320 BASELINE RD., SUITE C, RANCHO CUCAMONGA, CA 91701
TEL: (909) 941-3008 FAX: (909) 941-8211

IDENTIFICATION STAMP
DIV. OF THE STATE ARCHITECT
OFFICE OF REGULATION SERVICES
APPL 03-118423
AC — FLS — SS EY
DATE MAR 0-5 2018
FILE: 19-23

NO	DATE	BY	DESCRIPTION
1			REVISIONS

DRAWN: LS	CHECKED: RES
DATE: 3/6/2018	SCALE: AS NOTED
PROJECT NUMBER: 1723400	

BUILDING K
DEMOLITION AND
REMODEL PLANS

DRAWING NUMBER: E2.6

LONGFELLOW ELEMENTARY SCHOOL HVAC REPLACEMENT
COMPTON UNIFIED SCHOOL DISTRICT
1101 S DWIGHT AVE.
COMPTON, CA 90220

THIS APPLICATION DSA A#03-118423
SHALL NOT BE CLOSED WITH
CERTIFICATION UNTIL DSA A#03-119653
IS CLOSED WITH CERTIFICATION.

GENERAL NOTES

1. THESE DRAWINGS DO NOT CONTAIN THE NECESSARY COMPONENTS FOR CONSTRUCTION SAFETY.

2. LOCATIONS OF ALL UTILITIES SHOWN ARE APPROXIMATE AND CONTRACTOR SHALL EXERCISE EXTREME CAUTION IN EXCAVATING AND TRENCHING ON THIS SITE TO AVOID INTERCEPTING EXISTING PIPING OR CONDUITS. IT SHALL BE THE RESPONSIBILITY OF THE CONTRACTOR TO LOCATE ALL EXISTING UTILITIES WHETHER SHOWN HEREON OR NOT AND TO PROTECT THEM FROM DAMAGE. THE ARCHITECT IS NOT RESPONSIBLE FOR THE LOCATION OF UNDERGROUND UTILITIES OR STRUCTURES WHETHER OR NOT SHOWN OR DETAILED AND INSTALLED BY ANY OTHER CONTRACT. THE CONTRACTOR SHALL IMMEDIATELY NOTIFY THE ARCHITECT SHOULD ANY UNIDENTIFIED CONDITIONS BE DISCOVERED. THE CONTRACTOR SHALL BEAR ALL EXPENSE OF REPAIR OR REPLACEMENT OF UTILITIES OR OTHER PROPERTY DAMAGED BY OPERATIONS IN CONJUNCTION WITH THE EXECUTION OF THIS WORK.

3. THESE DOCUMENTS AND THE IDEAS AND DESIGNS INCORPORATED HEREIN, AS AN INSTRUMENT OF PROFESSIONAL SERVICE, ARE THE PROPERTY OF WLC ARCHITECTS, INC., AND ARE NOT TO BE USED, IN WHOLE OR IN PART, FOR ANY OTHER PROJECT WITHOUT THE WRITTEN AUTHORIZATION OF WLC ARCHITECTS, INC.

4. THE WORK SHOWN ON THESE DRAWINGS AS EXISTING CONDITIONS WAS PREPARED FROM INFORMATION FURNISHED BY THE OWNER. WHILE THIS INFORMATION IS BELIEVED TO BE RELIABLE, WLC ARCHITECTS, INC. IS NOT RESPONSIBLE FOR THE ACCURACY OR ADEQUACY OF ANY WORK SHOWN AS EXISTING NOR IS WLC ARCHITECTS, INC. RESPONSIBLE FOR ANY ERRORS OR OMISSIONS WHICH MAY HAVE BEEN INCORPORATED INTO THESE DRAWINGS AS A RESULT.

5. EACH BIDDER SHALL POSSESS AT THE TIME OF BID A CLASS B OR THE APPROPRIATE CLASS C CONTRACTOR'S LICENSE PURSUANT TO PUBLIC CONTRACT CODE SECTION 3300 AND BUSINESS AND PROFESSIONS CODE SECTION 7028.15. THE SUCCESSFUL BIDDER MUST MAINTAIN THE LICENSE THROUGHOUT THE DURATION OF THIS CONTRACT.

6. FIRE SAFETY DURING CONSTRUCTION

   A. GENERAL: FIRE SAFETY DURING CONSTRUCTION SHALL COMPLY WITH CALIFORNIA FIRE CODE (CFC) CALIFORNIA CODE OF REGULATIONS (CCR) TITLE 24, PART 9, CHAPTER 5 AND CHAPTER 33.

   B. ACCESS ROADS: FIRE DEPARTMENT ACCESS ROADS SHALL BE ESTABLISHED AND MAINTAINED IN ACCORDANCE WITH CHAPTER 5, SECTION 501.4 AND CHAPTER 33, SECTION 3310.

   C. WATER SUPPLY: WATER MAINS AND HYDRANTS SHALL BE OPERATIONAL IN ACCORDANCE WITH CHAPTER 5, SECTION 501.4 AND CHAPTER 33,SECTION 3312.

   D. BUILDING ACCESS: ACCESS TO BUILDINGS FOR THE PURPOSE OF FIREFIGHTING SHALL BE PROVIDED. CONSTRUCTION MATERIAL SHALL NOT BLOCK ACCESS TO BUILDINGS, HYDRANTS OR FIRE APPLIANCES.

   E. ALTERATIONS OF BUILDINGS: SHALL COMPLY WITH APPLICABLE PROVISIONS OF CHAPTER 33.

   F. DEMOLITION OF BUILDINGS: SHALL COMPLY APPLICABLE PROVISIONS OF CHAPTER 33.

   G. FIRE WATCH: MAINTAIN FIRE WATCH WHEN REQUIRED BY THE BUILDING OFFICIAL AND WHEN EXISTING FIRE PROTECTION SYSTEMS ARE SHUT DOWN FOR ALTERATIONS IN ACCORDANCE WITH CHAPTER 33, SECTION 3304.5. FIRE WATCH SHALL REMAIN IN EFFECT UNTIL EXISTING FIRE PROTECTION SYSTEMS ARE RETURNED TO SERVICE OR AS ALLOWED BY THE BUILDING OFFICIAL.

7. PENETRATIONS TO FIRE RATED MATERIALS OR ASSEMBLIES SHALL BE RESTORED TO EQUAL RATING. FIRE STOP SYSTEMS AS LISTED BY UNDERWRITERS LABORATORIES SHALL BE INSTALLED PER FIRE RESISTANCE DIRECTORY. FIRE STOP SYSTEMS SHALL BE AS SPECIFIED.

8. NONRESIDENTIAL ENERGY STANDARDS COMPLIANCE STATEMENT (TITLE 24, PART 6):

   THE DESIGN INDICATED HEREIN COMPLIES WITH THE REQUIREMENTS OF THE ENERGY CONSERVATION STANDARDS OF TITLE 24, PART 6, CALIFORNIA CODE OF REGULATIONS. THE PROPOSED BUILDING(S) WILL BE IN COMPLIANCE WITH THE ENERGY CONSERVATION STANDARDS PROVIDED IT (THEY) IS (ARE) BUILT ACCORDING TO THESE DRAWINGS AND SPECIFICATIONS AND PROVIDED ANY FUTURE IMPROVEMENTS ARE COMPLETED ACCORDING TO THE REQUIREMENTS OF TITLE 24, PART 6, CALIFORNIA CODE OF REGULATIONS. THESE PLANS AND SPECIFICATIONS HAVE BEEN PREPARED TO INCLUDE ALL SIGNIFICANT ENERGY CONSERVATION FEATURES REQUIRED FOR COMPLIANCE WITH THE STANDARDS. BUILDING AREAS THAT ARE UNCONDITIONED AND/OR NOT SUBJECT TO THE STANDARDS ARE INDICATED ON THE PLANS.

8. (CONT) ENVELOPE MANDATORY MEASURES:

   A. INSTALLED INSULATING MATERIALS SHALL HAVE BEEN CERTIFIED BY THE MANUFACTURER TO COMPLY WITH THE CALIFORNIA QUALITY STANDARDS FOR INSULATING MATERIAL.

   B. ALL INSULATING MATERIALS SHALL BE INSTALLED IN COMPLIANCE WITH THE FLAME SPREAD RATING AND SMOKE DENSITY REQUIREMENTS OF TITLE 24, PART 2, CALIFORNIA CODE OF REGULATIONS, SECTIONS 720 AND 2603.

   C. ALL EXTERIOR JOINTS AND OPENINGS IN THE BUILDING ENVELOPE THAT ARE POTENTIAL AND OBSERVABLE SOURCES OF AIR LEAKAGE SHALL BE CAULKED, GASKETED, WEATHERSTRIPPED OR OTHERWISE SEALED.

   D. SITE CONSTRUCTED DOORS, WINDOWS, AND SKYLIGHTS SHALL BE CAULKED BETWEEN THE UNIT AND THE BUILDING, AND SHALL BE WEATHERSTRIPPED (EXCEPT FOR UNFRAMED GLASS DOORS AND FIRE DOORS).

   E. MANUFACTURED DOORS AND WINDOWS INSTALLED SHALL HAVE AIR INFILTRATION RATES CERTIFIED BY THE MANUFACTURER IN ACCORDANCE WITH TITLE 24, PART 6, CALIFORNIA CODE OF REGULATIONS, SECTION 110.6.

   F. MANUFACTURED FENESTRATION PRODUCTS IN THE ENVELOPE OF THE BUILDING, INCLUDING, BUT NOT LIMITED TO, WINDOWS, SLIDING GLASS DOORS, FRENCH DOORS, SKYLIGHTS, CURTAIN WALLS, AND GARDEN WINDOWS MUST BE LABELED FOR U-VALUE IN ACCORDANCE WITH THE (NFRC) NATIONAL FENESTRATION RATING COUNCIL'S INTERIM U-VALUE RATING PROCEDURE.

   G. DEMISING WALL INSULATION SHALL BE INSTALLED IN ALL OPAQUE PORTIONS OF FRAMED WALLS (EXCEPT DOORS).

9. PROOF LOAD TESTS FOR EXPANSION TYPE ANCHOR BOLTS:

   A. ANCHOR DIAMETER REFERS TO THE THREAD SIZE FOR THE WEDGE CATEGORY ANCHOR.

   B. APPLY PROOF TEST LOADS TO WEDGE ANCHORS WITHOUT REMOVING THE NUT IF POSSIBLE. IF NOT, REMOVE NUT AND INSTALL A THREADED COUPLER TO THE SAME TIGHTNESS OF THE ORIGINAL NUT USING A TORQUE WRENCH AND APPLY LOAD.

   C. REACTION LOADS FROM TEST FIXTURES MAY BE APPLIED CLOSE TO THE ANCHOR BEING TESTED, PROVIDED THE ANCHOR IS NOT RESTRAINED FROM WITHDRAWING BY THE FIXTURE(S).

   D. TEST EQUIPMENT IS TO BE CALIBRATED BY AN APPROVED TESTING LABORATORY IN ACCORDANCE WITH STANDARD RECOGNIZED PROCEDURES.

   E. THE FOLLOWING CRITERIA APPLY FOR THE ACCEPTANCE OF INSTALLED ANCHORS:

   1. HYDRAULIC RAM METHOD: THE ANCHOR SHOULD HAVE NO OBSERVABLE MOVEMENT AT THE APPLICABLE TEST LOAD. FOR WEDGE TYPE ANCHORS, A PRACTICAL WAY TO DETERMINE OBSERVABLE MOVEMENT IS THAT THE WASHER UNDER THE NUT BECOMES LOOSE. DROP IN ANCHORS ARE ONLY TO BE TESTED WITH THIS METHOD.

   2. TORQUE WRENCH METHOD: THE APPLICABLE TEST TORQUE MUST BE REACHED WITHIN THE FOLLOWING LIMITS FOR WEDGE ANCHORS: ONE-HALF (1/2) TURN OF THE NUT.

   3. IF MANUFACTURERS TORQUE IS LESS THAN SPECIFIED TEST TORQUE THE MANUFACTURERS LISTED TORQUE SHALL BE USED FOR TESTING.

   H. TESTING SHOULD OCCUR 24 HOURS MINIMUM AFTER INSTALLATION OF THE SUBJECT ANCHORS

   I. ALL EXPANSION TYPE ANCHOR BOLTS USED FOR STRUCTURAL APPLICATIONS SHALL BE TESTED. ALL ANCHOR BOLTS OF THE EXPANSION TYPE USED FOR NON STRUCTURAL APPLICATIONS (LOADED IN EITHER PULLOUT OR SHEAR) SHALL HAVE 50 PERCENT OF THE BOLTS (ALTERNATE BOLTS IN ANY GROUP ARRANGEMENT ALLOWED BY THE TYPE OF SUBSTRATE AND DIAMETER OF BOLT LISTED BELOW UNDER TEST VALUES TABLE) PROOF TESTED IN TENSION TO TWICE THE ALLOWABLE TENSION LOAD. IF THERE ARE ANY FAILURES, THE IMMEDIATELY ADJACENT BOLTS MUST THEN ALSO BE TESTED. TESTING SHALL BE PERFORMED IN ACCORDANCE WITH TITLE 24, PART 2, SECTION 1910A.5

   J. ALL BOLTS MUST HAVE ICC/ES APPROVAL.

   A. ALL ANCHOR BOLTS OF THE EXPANSION TYPE INSTALLED IN CONCRETE SHALL BE ONE OF THE FOLLOWING:

   1. ITW RAMSET/REDHEAD-WEDGE ANCHOR-ICC/ES NO. 2427
   2. HILTI, INC.- QWIK BOLT TZ -WEDGE ANCHOR-ICC/ES NO. 1917
   3. SIMPSON - STRONGBOLT 2 - WEDGE ANCHOR - ICC/ES NO. 3037

MIMIMUM TEST VALUES
NORMALWEIGHT OR LIGHTWEIGHT CONCRETE

ANCHOR		WEDGE		---		
DIA. (IN)	TENSION LOAD (LBS)	TORQUE (FT-LBS)	EMBED MENT (IN)	---	---	---
---	---	---	---	---	---	---
3/8	1,100	25	2	---	---	---
1/2	2,000	50	3-1/4	---	---	---
5/8	2,300	80	4-1/4	---	---	---
3/4	3,700	150	4-3/4	---	---	---

   B. ALL ANCHOR BOLTS OF THE EXPANSION TYPE INSTALLED IN GROUT FILLED MASONRY SHALL BE ONE OF THE FOLLOWING:

   1. HILTI, INC.-KWIK BOLT III-WEDGE ANCHOR-ICC/ES NO. 1385
   2. SIMPSON-STRONGBOLT 2-WEDGE ANCHOR-IAMPO NO. ER-240

MIMIMUM TEST VALUES
GROUT FILLED CONCRETE MASONRY

ANCHOR		WEDGE		---		
DIA. (IN)	TENSION LOAD (LBS)	TORQUE (FT-LBS)	EMBED MENT (IN)	---	---	---
1/4	1,080	4	2	---	---	---
3/8	1,564	15	2-1/2	---	---	---
1/2	1,810	25	3-1/2	---	---	---
5/8	2,484	65	4	---	---	---
3/4	3,290	120	4-3/8	---	---	---

11. POWDER DRIVEN CONCRETE FASTENERS:

   A. GENERAL: USE OF POWDER DRIVEN CONCRETE FASTENERS FOR TENSION LOADS IS LIMITED TO SUPPORT OF MINOR LOADS LIKE ACOUSTICAL CEILINGS, DUCT WORK, CONDUIT.

   B. ALLOWABLE LOADS: IN GENERAL, LOADS SHOULD BE LIMITED TO LESS THAN 100 POUNDS. HOWEVER, GREATER LOADS MAY BE PERMITTED FOR SPECIAL CASES WHEN APPROVED BY THE CHECKING SUPERVISOR OR FIELD ENGINEER.

   C. TESTING: THE OPERATOR, TOOL, AND FASTENER SHALL BE PREQUALIFIED BY THE PROJECT INSPECTOR. HE SHALL OBSERVE THE TESTING OF THE FIRST 10 FASTENER INSTALLATIONS. A TEST "PULL-OUT" LOAD OF NOT LESS THAN TWICE THE DESIGN LOAD, OR 200 POUNDS, WHICHEVER IS GREATER SHALL BE APPLIED TO THE PIN IN SUCH A MANNER AS NOT TO RESIST THE SPALLING TENDENCY OF THE CONCRETE AROUND THE PIN. THEREAFTER, RANDOM TESTS UNDER THE PROJECT INSPECTOR'S SUPERVISION SHALL BE MADE OF APPROXIMATELY 1 IN 10 PINS, EXCEPT THAT WHEN THE DESIGN LOAD EXCEEDS 100 POUNDS, ONE HALF OF THE PINS SHALL BE TESTED. SHOULD FAILURE OCCUR ON ANY PIN TESTED, ALL INSTALLATIONS MUST BE TESTED AND UNFAIR PINS REPLACED.

   D. ALL POWDER DRIVEN CONCRETE FASTENERS SHALL BE ONE OF THE FOLLOWING:

   1. HILTI, INC.
      X-CP 72 PINS - WOOD PLATE - ICC/ES NO. 2379
      X-U PINS - STEEL TRACK - ICC/ES NO. 2269
   2.. ITW RAMSET/REDHEAD
      DRIVE PIN - WOOD PLATE - ICC/ES NO. 2690
      DRIVE PIN - STEEL TRACK - ICC/ES NO. 1799
   3. SIMPSON STRONG-TIE CO., INC.
      PDPWL-300MG - WOOD PLATE - ICC/ES NO. 2138
      PDPA-125- STEEL TRACK - ICC/ES NO. 2138

I find that: ☒ All drawings or sheets listed on the cover or index sheet ☐ This drawing or page

☒ is/are in general conformance with the project design intent, and
☒ has/have been coordinated with the project plans and specifications.

Mark Graham — Signature; 03/06/18 — Date
Architect or Engineer designated to be in general responsible charge
MARK GRAHAM — Print Name
C-26046 — License Number; 03/31/18 — Expiration Date

☐ is/are in general conformance with the project design intent, and
☐ has/have been coordinated with the project plans and specifications.

Signature; Date
Architect or Engineer delegated responsibility for this portion of the work
Print Name
License Number; Expiration Date

12. INSPECTOR OF RECORD REQUIREMENTS

   A. ONE OR MORE INSPECTORS EMPLOYED BY THE OWNER IN ACCORDANCE WITH THE REQUIREMENTS OF TITLE 24 OF THE CALIFORNIA CODE OF REGULATIONS WILL BE ASSIGNED TO THE WORK. THE INSPECTORS DUTIES ARE SPECIFICALLY DEFINED IN SECTION 4-342 OF SAID TITLE 24, PART 1 AND IN ADDITION SHALL BE AS STIPULATED IN INTERPRETATION OF REGULATION DOCUMENT IR A-8.

   B. INSPECTOR SHALL BE CERTIFIED AS A CLASS 3 INSPECTOR THROUGH THE DIVISION OF THE STATE ARCHITECT INSPECTOR EXAMINATION PROGRAM. INSPECTOR SHALL ALSO BE SPECIFICALLY APPROVED BY THE DIVISION OF THE STATE ARCHITECT FOR THIS PROJECT AT LEAST 10 DAYS PRIOR TO THE START OF ANY WORK FOR THIS PROJECT.

14. ALL WORK SHOWN ON THESE DRAWINGS SHALL COMPLY WITH THE REQUIREMENTS OF TITLE 24, CALIFORNIA CODE OF REGULATIONS (CCR).

15. CHANGES TO THE APPROVED DRAWINGS AND SPECIFICATIONS SHALL BE MADE BY AN ADDENDUM OR A CONSTRUCTION CHANGE DOCUMENT APPROVED BY THE DIVISION OF THE STATE ARCHITECT, AS REQUIRED BY TITLE 24, CCR, PART 1, SECTION 4-338.

16. THE INTENT OF THESE DRAWINGS AND SPECIFICATIONS IS THAT THE WORK OF THE ADDITION, ALTERATION OR RECONSTRUCTION IS IN COMPLIANCE WITH THE REQUIREMENTS OF TITLE 24, CALIFORNIA CODE OF REGULATIONS. SHOULD ANY CONDITIONS SUCH AS DETERIORATION OR NON-COMPLYING CONSTRUCTION BE DISCOVERED WHICH IS NOT IDENTIFIED BY THE CONTRACT DOCUMENTS WHEREIN THE FINAL WORK WOULD NOT COMPLY WITH THE REQUIREMENTS OF TITLE 24, CALIFORNIA CODE OF REGULATIONS, THE CONTRACTOR SHALL IMMEDIATELY NOTIFY THE OWNER AND THE ARCHITECT OF THE CONDITION IN WRITING. NECESSARY INFORMATION REQUIRED TO CORRECT THE CONDITIONS ENCOUNTERED WILL BE ISSUED BY THE ARCHITECT. A CHANGE ORDER MAY BE ISSUED TO ADJUST THE CONTRACT SUM OR TIME COMMENSURATE WITH THE AMOUNT OF ADDITIONAL WORK REQUIRED IF ANY. A CONSTRUCTION CHANGE DOCUMENT SHALL BE APPROVED BY THE DIVISION OF THE STATE ARCHITECT PRIOR TO PROCEEDING WITH THE WORK REQUIRED BY THE CHANGE ORDER.

17. DSA ACCEPTED TESTING LABORATORY DIRECTLY EMPLOYED BY THE DISTRICT (OWNER) SHALL CONDUCT ALL REQUIRED TEST AND INSPECTIONS FOR THE PROJECT.

PROJECT TEAM

PROJECT ADDRESS
LONGFELLOW ELEMENTARY SCHOOL
1101 S. DWIGHT STREET
COMPTON, CA 90220
PHONE: 310-898-6460

OWNER
COMPTON UNIFIED SCHOOL DISTRICT
501 S SANTA FE AVENUE
COMPTON, CA 90221
PHONE: 310-604-6507 FAX: 310-763-0105

ARCHITECT
WLC ARCHITECTS, INC.
8163 ROCHESTER AVENUE., SUITE 100
RANCHO CUCAMONGA, CA 91730
PHONE: 909-987-0909 FAX: 909-980-9980

MECHANICAL ENGINEER
OED
5200 E LA PALMA AVE
ANAHEIM, CA 92807
PHONE: 714-693-2277

ELECTRICAL ENGINEER
A&F ENGINEERING GROUP, INC.
9320 BASELINE RD., SUITE C
RANCHO CUCAMONGA, CA 91701
PHONE: 909-941-3008 FAX: 909-941-8211

SCOPE OF WORK DESCRIPTION

THE SCOPE OF THE WORK AS STATED BELOW IS FOR DSA PLAN REVIEW PURPOSES ONLY AND DOES NOT CONSTITUTE A DETAILED AND FULL EXPLANATION OF THE REQUIREMENTS OF THE CONTRACT DOCUMENTS.

REPLACE (1) EXISTING ROOF MOUNTED HVAC UNIT AT ADMINISTRATION BUILDING A AND (5) EXISTING FLOOR MOUNTED HVAC UNITS AT CLASSROOM BUILDINGS C, D, F, G AND K WITH NEW PACKAGE HVAC UNITS, AND MODIFY (1) EXISTING FLOOR MOUNTED HVAC UNIT AT CLASSROOM BUILDING E AND SITE WORKS.

VICINITY MAP

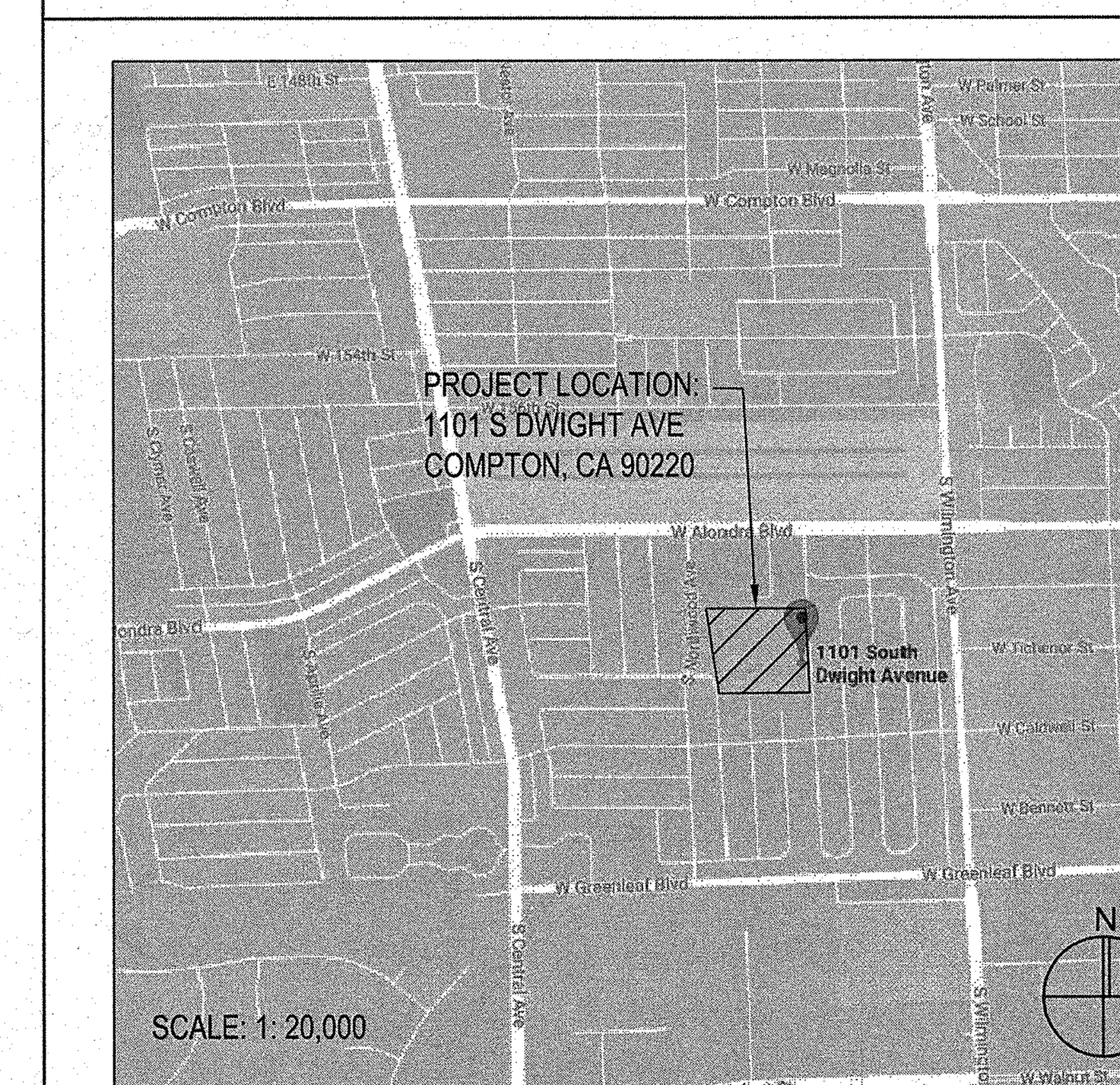

SHEET INDEX

DRAWING REF NO	DESCRIPTION
ARCHITECTURAL	
A0.1	GENERAL NOTE AND PROJECT DIRECTORY
A0.2	ARCHITECTURAL DRAWINGS ABBREVIATIONS AND GOVERNING CODE
A1.0	SITE PLAN AND BUILDING A DEMO AND NEW ROOF PLANS
A2.1	BUILDING C AND D ENLARGED DEMO AND NEW FLOOR PLANS
A2.2	BUILDING F AND G ENLARGED DEMO AND NEW FLOOR PLANS
A2.3	BUILDING K ENLARGED DEMO AND NEW FLOOR PLANS AND DETAILS
A3.1	BUILDING K ENLARGED DEMO AND NEW REFLECTED CEILING PLANS
STRUCTURAL	
S1.0	GENERAL NOTE AND DETAILS
S1.1	DETAILS
S1.2	DETAILS
S2.1	BUILDING C, D, E, F, G AND K PARTIAL FLOOR PLANS
MECHANICAL	
M-0.1	MECHANICAL GENERAL NOTE AND LEGEND
M-0.2	MECHANICAL SCHEDULES
M-2.0	BUILDING A DEMOLITION AND REMODEL FLOOR PLANS
M-2.1	BUILDING C DEMOLITION AND REMODEL FLOOR PLANS
M-2.2	BUILDING D DEMOLITION AND REMODEL FLOOR PLANS
M-2.3	BUILDING E DEMOLITION AND REMODEL FLOOR PLANS
M-2.4	BUILDING F DEMOLITION AND REMODEL FLOOR PLANS
M-2.5	BUILDING G DEMOLITION AND REMODEL FLOOR PLANS
M-2.6	BUILDING K DEMOLITION AND REMODEL FLOOR PLANS
M-3.1	MECHANICAL SECTIONS
M-4.1	MECHANICAL DETAILS
M-4.3	MECHANICAL DETAILS
M-4.4	MECHANICAL DETAILS
M-5.1	WIRING DIAGRAM DETAILS
M-5.2	WIRING DIAGRAM DETAILS
M-5.3	WIRING DIAGRAM DETAILS
M-5.4	WIRING DIAGRAM DETAILS
M-5.5	WIRING DIAGRAM DETAILS
M-6.0	TITLE 24 BUILDING A
M-6.1	TITLE 24 BUILDING C
M-6.2	TITLE 24 BUILDING D
M-6.3	TITLE 24 BUILDING E
M-6.4	TITLE 24 BUILDING F
M-6.5	TITLE 24 BUILDING G
M-6.6	TITLE 24 BUILDING K
ELECTRICAL	
E0.1	GENERAL NOTES SYMBOL LIST & DETAILS
E0.2	DEMOLITION AND REMODEL SINGLE LINE DIAGRAM
E0.3	PANEL SCHEDULES
E1.0	SITE PLAN
E2.1	BUILDING C DEMOLITION AND REMODEL PLANS
E2.2	BUILDING D DEMOLITION AND REMODEL PLANS
E2.3	BUILDING E DEMOLITION AND REMODEL PLANS
E2.4	BUILDING F DEMOLITION AND REMODEL PLANS
E2.5	BUILDING G DEMOLITION AND REMODEL PLANS
E2.6	BUILDING K DEMOLITION AND REMODEL PLANS

ARCHITECTS WLC
CLIENT FOCUSED • PASSION DRIVEN
SOUTHERN CALIFORNIA
8163 ROCHESTER AVENUE, SUITE 100
RANCHO CUCAMONGA
CALIFORNIA 91730-0729
TEL: 909-987-0909
www.wlcarchitects.com

LONGFELLOW ELEMENTARY SCHOOL
HVAC REPLACEMENT
COMPTON UNIFIED SCHOOL DISTRICT
1101 S DWIGHT AVE.
COMPTON, CA 90220

LICENSED ARCHITECT — MARK GRAHAM — C-26046 — 03-31-19 — STATE OF CALIFORNIA

CONSULTANT

IDENTIFICATION STAMP
DIV. OF THE STATE ARCHITECT
OFFICE OF REGULATION SERVICES
APPL 03-118423
AC — FLS SS EY
DATE MAR 0 8 2018
FILE: 19-23
46 SHEETS TOTAL + DSA 103 + SPECS.

NO	DATE	BY	DESCRIPTION
#	REVISIONS		

DRAWN: CHECKED:
DATE: 3/6/2018 SCALE:
PROJECT NUMBER: 1723400

GENERAL NOTES & PROJECT DIRECTORY

DRAWING NUMBER: A0.1

ARCHITECTURAL DRAWING ABBREVIATIONS

SYMBOLS

&	AND
∠	ANGLE
@	AT
CL	CENTERLINE
⊏	CHANNEL
ø	DIAMETER OR ROUND
(E)	EXISTING
(N)	NEW
d	PENNY (NAILS)
⊥	PERPENDICULAR
PL	PLATE
#	POUND OR NUMBER

A/C	AIR CONDITIONING
A/E	ARCHITECT/ENGINEER
AB	ANCHOR BOLT
ABAN	ABANDON
ABC	AGGREGATE BASE COURSE
ABV	ABOVE
AC	ASPHALTIC CONCRETE
ACC	ACCESS(IBLE)
ACST	ACOUSTICAL
ACT	ACOUSTICAL CEILING TILE
AD	AREA DRAIN
ADDM	ADDENDUM
ADH	ADHESIVE
ADJ	ADJUSTABLE
ADJC	ADJACENT
AFF	ABOVE FINISHED FLOOR
AFG	ABOVE FINISHED GRADE
AGGR	AGGREGATE
AHU	AIR HANDLING UNIT
AL	ALUMINUM
ALT	ALTERNATE
ANC	ANCHOR, ANCHORAGE
APLD	APPLIED
APPRX	APPROXIMATE
ARCH	ARCHITECT(URAL)
ASC	ABOVE SUSPENDED CEILING
ASPH	ASPHALT
ASSY	ASSEMBLY
ASYM	ASYMMETRICAL
AWG	AMERICAN WIRE GAGE

BC	BACK OF CURB
BD	BOARD
BITUM	BITUMINOUS
BLDG	BUILDING
BLK	BLOCK
BLKG	BLOCKING
BLW CLG	BELOW CEILING
BLW FFLR	BELOW FINISH FLOOR
BLW	BELOW
BM	BENCH MARK
BN	BOUNDARY NAILING
BOT	BOTTOM
BRCG	BRACING
BRDG	BRIDGING
BRG	BEARING
BRK	BRICK
BRKT	BRACKET
BRS	BRASS
BRZ	BRONZE
BS	BOTH SIDES
BSMT	BASEMENT
BTWN	BETWEEN
BUR	BUILT UP ROOFING
BW	BOTH WAYS

C&G	CURB AND GUTTER
CAB	CABINET
CAD	CADMIUM
CB	CATCH BASIN
CBB	CEMENTITIOUS BACKER BOARD
CEM	CEMENT
CER	CERAMIC
CFCI	CONTRACTOR FURNISH CONTRACTOR INSTALLED
CFLG	COUNTERFLASHING
CFOI	CONTRACTOR FURNISH OWNER INSTALLED
CG	CORNER GUARD
CHBD	CHALKBOARD
CHFR	CHAMFER
CI	CAST IRON
CIR	CIRCLE
CIRC	CIRCULAR, CIRCUMFERENCE
CJ	CONSTRUCTION JOINT
CL	CHAIN LINK
CLG	CEILING
CLJ	CONTROL JOINT
CLL	CONTRACT LIMIT LINE
CLOS	CLOSURE
CLR	CLEAR(ANCE)
CLRM	CLASSROOM
CMPST	COMPOSITION
CMU	CONCRETE MASONRY UNIT
CNCL	CONCEALED
CNR	CORNER
CNTR	COUNTER
COL	COLUMN
COM	COMMON
COMB	COMBINATION
COMPT	COMPARTMENT
CONC	CONCRETE
CONF	CONFERENCE
CONN	CONNECTION
CONSTR	CONSTRUCTION
CONT	CONTINUOUS (ATION)
CONTR	CONTRACT(OR)
COORD	COORDINATE
CORR	CORRIDOR
CPR	COPPER
CPRS	COMPRESS(ED), (ION), (IBLE)
CPT	CARPET(ED)
CRS	COLD ROLLED STEEL
CS	CAST STONE
CSG	CASING
CSK	COUNTERSUNK
CSMT	CASEMENT
CSWK	CASEWORK
CT	CERAMIC TILE
CTB	CERAMIC TILE BASE
CTF	CERAMIC TILE FLOOR
CTG	COATING
CTR	CENTER

CUFT	CUBIC FOOT
CUIN	CUBIC INCH
CUST	CUSTODIAN
CUYD	CUBIC YARD

D	DRAIN
DA	DOUBLEACTING
DBL	DOUBLE
DEMO	DEMOLISH, DEMOLITION
DEP	DEPRESSED
DEPT	DEPARTMENT
DET	DETAIL
DF	DRINKING FOUNTAIN
DH	DOUBLE HUNG
DIA	DIAMETER
DIAG	DIAGONAL
DIFF	DIFFUSER
DIM	DIMENSION
DISP	DISPENSER
DIV	DIVISION
DMPF	DAMPPROOFING
DMT	DEMOUNTABLE
DN	DOWN
DR	DOOR
DRB	DRAINBOARD
DRLV	DOOR LOUVER
DS	DOWNSPOUT
DSP	DRY STANDPIPE
DT	DRAIN TILE
DVTL	DOVETAIL
DW	DISHWASHER
DWG	DRAWING
DWL	DOWEL
DWR	DRAWER

E	EAST
EA	EACH
EAR	EXHAUST AIR REGISTER
EB	EXPANSION BOLT
EE	EACH END
EF	EACH FACE
EFS	EXTERIOR FINISH SYSTEM
EHD	ELECTRIC HAND DRYER
EIFS	EXTERIOR INSULATION AND FINISH SYSTEM
EJ	EXPANSION JOINT
EL	ELEVATION
ELAST	ELASTOMERIC
ELEC	ELECTRIC(AL)
ELEV	ELEVATOR
EM	EXPANDED METAL
EMER	EMER EMERGENCY
EN	EDGE NAILING
ENCL	ENCLOSE(URE)
ENGR	ENGINEER
ENTR	ENTRANCE
EP	ELECTRICAL PANELBOARD
EQ	EQUAL
EQUIP	EQUIPMENT
ESC	ESCUTCHEON
ESCL	ESCALATOR
ESMT	EASEMENT
EW	EACH WAY
EWC	ELECTRIC WATER COOLER
EWH	ELECTRICAL WATER HEATER
EWS	EYE WASH STATION
EXC	EXCAVATE
EXG	EXISTING
EXH	EXHAUST
EXP	EXPOSED
EXPN	EXPANSION
EXS	EXTRA STRONG
EXT	EXTERIOR

F/F	FACE TO FACE
FA	FIRE ALARM
FAB	FABRIC
FBD	FIBERBOARD
FBRK	FIRE BRICK
FCBRK	FACE BRICK
FD	FLOOR DRAIN
FDTN	FOUNDATION
FE	FIRE EXTINGUISHER
FEC	FIRE EXTINGUISHER CABINET
FFA	FROM FLOOR ABOVE
FFB	FROM FLOOR BELOW
FFEL	FINISHED FLOOR ELEVATION
FFL	FINISHED FLOOR LINE
FGL	FIBERGLASS
FHC	FIRE HOSE CABINET
FHMS	FLATHEAD MACHINE SCREW
FHWS	FLATHEAD WOOD SCREW
FIN	FINISH(ED)
FJT	FLUSH JOINT
FLASH	FLASH(ING)
FLDG	FOLDING
FLG	FLOORING
FLR	FLOOR
FLUOR	FLUORESCENT
FN	FIELD NAILING
FOC	FACE OF CONCRETE
FOF	FACE OF FINISH
FOG	FACE OF GRID
FOM	FACE OF MASONRY
FOS	FACE OF STUDS
FPL	FIREPLACE
FPRF	FIREPROOF(ING)
FR	FRAME(D), (ING)
FRG	FIBER REINFORCED GYPSUM
FRGL	FIRE RESISTIVE GLAZING
FRP	FIBERGLASS REINFORCED PLASTIC
FRTD	FIRE RATED
FRTW	FIRE RETARDANT TREATED WOOD
FRZ	FREEZER
FS	FAR SIDE
FSTN	FASTEN, FASTENER
FT	FOOT OR FEET
FTG	FOOTING
FURG	FURRED (ING)
FUT	FUTURE
FWC	FABRIC WALL COVERING

GA	GAGE
GAL	GALLON
GALV	GALVANIZED
GB	GRAB BAR
GFRC	GLASS FIBER REINFORCED CONCRETE
GI	GALVANIZED IRON
GL	GLASS
GLU LAM	GLUE LAMINATED
GLZ	GLAZING
GLZCMU	GLAZED CONCRETE MASONRY UNITS
GND	GROUND
GPC	GYPSUM PLASTER CEILING
GR LN	GRADE LINE
GR BM	GRADE BEAM
GR	GRADE, (ING)
GRBD	GARBAGE DISPOSER
GSB	GYPSUM SHEATHING BOARD
GSS	GALVANIZED STEEL SHEET
GST	GLAZED STRUCTURAL TILE
GT	GROUT
GVL	GRAVEL
GYP	GYPSUM

HB	HOSE BIBB
HC	HOLLOW CORE
HD	HEAVY DUTY
HD JT	HEAD JOINT
HDAS	HEADED ANCHOR STUD
HDR	HEADER
HDW	HARDWARE
HDWD	HARDWOOD
HEX	HEXAGONAL
HGR	HANGER
HLDN	HOLD DOWN
HM	HOLLOW METAL
HMD	HOLLOW METAL DOOR
HMDF	HOLLOW METAL DOOR AND FRAME
HMF	HOLLOW METAL FRAME
HNDRL	HANDRAIL
HORIZ	HORIZONTAL
HPT	HIGH POINT
HR	HOUR
HT	HEIGHT
HTG	HEATING
HVAC	HEATING/VENTILATING/ AIR CONDITIONING
HWH	HOT WATER HEATER

ID	INSIDE DIAMETER
INCL	INCLUDE(D), (ING)
INSTL	INSTALL
INSUL	INSULATE(D), (ION)
INT	INTERIOR
INV	INVERT
IPS	IRON PIPE SIZE

JAN	JANITOR
JST	JOIST
JT	JOINT

KIT	KITCHEN
KO	KNOCKOUT
KPL	KICKPLATE

LAB	LABORATORY
LAD	LADDER
LAM	LAMINATE(D)
LAV	LAVATORY
LBL	LABEL
LBR	LUMBER
LBS	POUND
LCT	LINOLEUM COMPSITE TILE
LDR	LEADER
LG	LENGTH
LH	LEFT HAND
LHR	LEFT HAND REVERSE
LKNT	LOCKNUT
LKR	LOCKER
LKWASH	LOCKWASHER
LLH	LONG LEG HORIZONTAL
LLV	LONG LEG VERTICAL
LMST	LIMESTONE
LNDSCP	LANDSCAPE(D)
LNTL	LINTEL
LP	LIGHTPROOF
LPT	LOW POINT
LT	LIGHT
LTWT	LIGHT WEIGHT
LVL	LEVEL(ER)
LVR	LOUVER
LW	LIGHTWEIGHT CONCRETE
LWIC	LIGHTWEIGHT INSULATING CONCRETE

MAINT	MAINTAIN(ANCE)
MAS	MASONRY
MATL	MATERIAL
MAX	MAXIMUM
MB	MACHINE BOLT
MBR	MEMBER
MC	MEDICINE CABINET
MCB	METAL CORNER BEAD
MDO	MEDIUM DENSITY OVERLAID
MECH	MECHANICAL
MED	MEDIUM
MEMB	MEMBRANE
MEZZ	MEZZANINE
MFD	METAL FLOOR DECKING
MFR	MANUFACTURE(ER)
MH	MANHOLE
MIN	MINIMUM
MIRR	MIRROR
MISC	MISCELLANEOUS
ML	METAL LATH
MLDG	MOLDING
MLWK	MILLWORK
MO	MASONRY OPENING
MOD	MODULE (AR)
MR	MOISTURE RESISTANT
MRB	MARBLE
MRD	METAL ROOF DECKING
MS	MACHINE SCREW
MTD	MOUNTED
MTL	METAL

MTR	MORTAR
MULL	MULLION
MVBL	MOVABLE
MWP	MEMBRANE WATER PROOFING
N	NORTH
NA	NOT APPLICABLE
NAT	NATURAL
NCOMBL	NONCOMBUSTIBLE
NE	NOT EXCEEDING
NF	NEAR FACE
NIC	NOT IN CONTRACT
NLB	NON-LOAD BEARING
NM	NONMETALLIC
NO	NUMBER
NOM	NOMINAL
NR	NOISE REDUCTION
NRC	NOISE REDUCTION COEFFICIENT
NRCA	NATIONAL ROOFING CONTRACTORS ASSOCIATION
NS	NEAR SIDE
NTS	NOT TO SCALE

O/O	OUT TO OUT
OA	OVERALL
OBS	OBSCURE
OC	ON CENTER(S)
OD	OUTSIDE DIAMETER
OFCI	OWNER FURNISHED - CONTRACTOR INSTALLED
OFF	OFFICE
OFOI	OWNER FURNISHED - OWNER INSTALLED
OFS	OUTSIDE FACE OF STUD
OHMS	OVALHEAD MACHINE SCREW
OHWS	OVALHEAD WOOD SCREW
OPH	OPPOSITE HAND
OPNG	OPENING
OPP	OPPOSITE
OPQ	OPAQUE
OPR	OPERABLE
ORD	OVERFLOW ROOF DRAIN
OVFL	OVERFLOW
OVHD	OVERHEAD

PAR	PARALLEL
PAT	PATTERN
PB	PANIC BAR
PBD	PARTICLE BOARD
PC	PORTLAND CEMENT
PCC	PRECAST CONCRETE
PCP	PORTLAND CEMENT PLASTER
PED	PEDESTAL
PERF	PERFORATE(D)
PERIM	PERIMETER
PERP	PERPENDICULAR
PGBD	PEGBOARD
PH	PHASE
PHS	PHILLIPS HEAD SCREW
PI	POINT OF INTERSECTION
PIV	POST INDICATOR VALVE
PL	PROPERTY LINE
PLAM	PLASTIC LAMINATE
PLAS	PLASTER
PLBG	PLUMBING
PLYWD	PLYWOOD
PNEU	PNEUMATIC
PNL	PANEL
PNT	PAINT(ED)
POL	POLISHED
POLY	POLYETHYLENE
PORC	PORCELAIN
PORT	PORTABLE
PR	PAIR
PRCST	PRECAST
PREFAB	PREFABRICATE(D)
PREFIN	PREFINISHED
PREFMD	PREFORMED
PRKG	PARKING
PRML	PREMOLDED
PROJ	PROJECT
PROP	PROPERTY
PSCONC	PRESTRESSED CONCRETE
PT	POINT
PTCONC	POST TENSIONED CONCRETE
PTD	PAPER TOWEL DISPENSER
PTN	PARTITION
PTR	PAPER TOWEL RECEPTOR
PVC	POLYVINYL CHLORIDE
PVG	PAVE(D), (ING)
PVMT	PAVEMENT

QT	QUARRY TILE
QTB	QUARRY TILE BASE
QTF	QUARRY TILE FLOOR
QTR	QUARTER
QTY	QUANTITY

R	RISER
RA	RETURN AIR
RAB	RABBET
RAD	RADIUS
RB	RESILIENT BASE
RBR	RUBBER
RCP	REINFORCED CONCRETE PIPE
RCVR	RECEIVER
RD	ROOF DRAIN
RDGINS	RIGID INSULATION
RDWY	ROADWAY
REBAR	REINFORCING STEEL BARS
REC	RECESSED
RECT	RETANGULAR
REF	REFERENCE
REFL	REFLECT(ED), (IVE), (OR)
REFR	REFRIGERATOR
REG	REGISTER
REINF	REINFORCE(D), (ING), (MENT)
REM	REMOVE(ABLE)
REP	REPAIR
REPL	REPLACE
REQD	REQUIRED
RESIL	RESILIENT
RET	RETURN
REV	REVISION(S), REVISED
RF	RESILIENT FLOORING
RFG	ROOFING
RFH	ROOF HATCH
RH	RIGHT HAND
RHMS	ROUND HEAD MACHINE SCREW
RHR	RIGHT HAND REVERSE
RHWS	ROUND HEAD WOOD SCREW
RL	ROOF LEADER
RLG	RAILING
RM	ROOM
RND	ROUND
RO	ROUGH OPENING
ROW	RIGHT OF WAY
RS	ROUGH SAWN
RTF	RUBBER TILE FLOORING
RTU	ROOF TOP UNIT
RV	ROOF VENT
RVL	REVEAL
RVS	REVERSE (SIDE)
RVT	RIVET(ED)
RWD	REDWOOD
RWL	RAIN WATER LEADER

S	SOUTH
S2S	SURFACED TWO SIDES
S4S	SURFACED FOUR SIDES
SA	SUPPLY AIR
SALV	SALVAGE
SAT	SUSPENDED ACOUSTICAL TILE
SB	SPLASH BLOCK
SBSTR	SUBSTRATE
SC	SOLID CORE
SCD	SEAT COVER DISPENSER
SCHED	SCHEDULE
SCP	SCUPPER
SCRN	SCREEN
SD	STORM DRAIN
SDBL	SANDBLAST
SECT	SECTION
SGL	SINGLE
SHR	SHOWER
SHT	SHEET(ING)
SHTHG	SHEATHING
SHV	SHELVES (ING)
SIM	SIMILAR
SKLT	SKYLIGHT
SLD	SEALED
SLDG	SLIDE (ING)
SLDR	SOLDER
SLNT	SEALANT
SLV	SLEEVE
SMACNA	SHEET METAL AND AIR CONDITIONING CONTRACTORS NATIONAL ASSOCIATION
SMLS	SEAMLESS
SND	SANITARY NAPKIN DISPENSER
SNDINS	SOUND INSULATION
SNDU	SANITARY NAPKIN DISPOSAL UNIT
SNT	SEALANT
SPC	SUSPENDED PLASTER CEILING
SPD	SOAP DISPENSER
SPEC	SPECIFICATION(S) (ED)
SPRT	SUPPORT
SQ	SQUARE
SSK	SERVICE SINK
SST	STAINLESS STEEL
STA	STATION
STAG	STAGGERED
STC	SOUND TRANSMISSION CLASS
STD	STANDARD
STG	SEATING
STIF	STIFFENER
STIR	STIRRUP
STL	STEEL
STOR	STORAGE
STR	STRAIGHT
ST	STREET
STRCT	STRUCTURAL
STU	STRUCT
SUSP	SUSPENDED
SV	SHEET VINYL
SYMM	SYMMETRICAL
SYNTH	SYNTHETIC
SYS	SYSTEM

T	TREAD
T & B	TOP AND BOTTOM
TB	THRU BOLT
TBE	THREADED BOTH ENDS
TBM	TEMPORARY BENCH MARK
TD	TOWEL DISPENSER
TDR	TOWEL DISPENSER/ RECEPTACLE
TEL	TELEPHONE
TEMP	TEMPORARY
TER	TERRAZZO
TFA	TO FLOOR ABOVE
TFB	TO FLOOR BELOW
T & G	TONGUE & GROOVE
THD	THREAD(ED)
THERM	THERMAL
THK	THICK(NESS)
THRES	THRESHOLD
TKBD	TACKBOARD
TMPD	TEMPERED
TOB	TOP OF BEAM
TOC	TOP OF CURB
TOF	TOP OF FOOTING
TOFF	TOP OF FINISH FLOOR
TOJ	TOP OF JOIST
TOL	TOLERANCE
TOM	TOP OF MASONRY
TOP	TOP OF PARAPET
TOPV	TOP OF PAVEMENT
TOS	TOP OF SHEATHING
TOSL	TOP OF SLAB
TOST	TOP OF STEEL
TOW	TOP OF WALL
TPD	TOILET PAPER DISPENSER
TPTN	TOILET PARTITION
TS	TUBE STEEL
TWLB	TOWEL BAR
TV	TELEVISION
TYP	TYPICAL

UC	UNDERCUT
UGND	UNDERGROUND
UL	UNDERWRITERS LABORATORY
UNFIN	UNFINISHED
UON	UNLESS OTHERWISE NOTED
UR	URINAL
VAR	VARIES
VB	VINYL BASE
VCT	VINYL COMPOSITION TILE
VERT	VERTICAL
VEST	VESTIBULE
VFAT	VINYL FACED ACOUSTIC TILE
VIF	VERIFY IN FIELD
VJ	V-JOINT(ED)
VNR	VENEER
VR	VAPOR RETARDER
VTR	VENT THROUGH ROOF
VWC	VINYL WALL COVERING

W/	WITH
W/W	WALL TO WALL
W/O	WITHOUT
W	WEST
WBL	WOOD BLOCKING
WC	WATER CLOSET
WD	WOOD
WDP	WOOD PANELING
WDW	WINDOW
WF	WIDE FLANGE
WFS	WOOD FURRING STRIP
WGL	WIRED GLASS
WH	WALL HUNG
WI	WROUGHT IRON
WID	WIDTH, WIDE
WLD	WELD(ED)
WM	WIRE MESH
WP	WATERPROOF(ING)
WPT	WORKING POINT
WR	WIRE ROPE
WS	WOOD SCREW
WSCT	WAINSCOT
WT	WEIGHT
WWF	WELDED WIRE FABRIC

XBRACE	CROSS BRACE
XFMR	TRANSFORMER
XSECT	CROSS SECTION

YCO	YARD CLEANOUT
YD	YARD

GOVERNING AGENCIES

DIVISION OF THE STATE ARCHITECT
STRUCTURAL SAFETY SECTION (DSA/SSS)
700 NORTH ALAMEDA STREET, SUITE 5-500
LOS ANGELES, CALIFORNIA 90012
(213) 897-3995

DIVISION OF THE STATE ARCHITECT
FIRE AND LIFE SAFETY SECTION (DSA/FLS)
700 NORTH ALAMEDA STREET, SUITE 5-500
LOS ANGELES, CALIFORNIA 90013
(213) 897-3995

GOVERNING CODES

2016 CALIFORNIA BUILDING STANDARDS ADMINISTRATIVE CODE
CALIFORNIA CODE OF REGULATIONS
(CCR) TITLE 24, PART 1

2016 CALIFORNIA BUILDING CODE (CBC)
CALIFORNIA CODE OF REGULATIONS
(CCR) TITLE 24, PART 2
(2015 INTERNATIONAL BUILDING CODE (IBC) W/ CALIFORNIA AMENDMENTS)

2016 CALIFORNIA ELECTRICAL CODE (CEC)
CALIFORNIA CODE OF REGULATIONS
(CCR) TITLE 24, PART 3
(2014 NATIONAL ELECTRIC CODE (NEC) W/ CALIFORNIA AMENDMENTS)

2016 CALIFORNIA MECHANICAL CODE (CMC)
CALIFORNIA CODE OF REGULATIONS
(CCR) TITLE 24, PART 4
(2015 UNIFORM MECHANICAL CODE (UMC) W/ CALIFORNIA AMENDMENTS)

2016 CALIFORNIA PLUMBING CODE (CPC)
CALIFORNIA CODE OF REGULATIONS
(CCR) TITLE 24, PART 5
(2015 UNIFORM PLUMBING CODE (UPC) W/ CALIFORNIA AMENDMENTS)

2016 CALIFORNIA ENERGY CODE
CALIFORNIA CODE OF REGULATIONS
(CCR) TITLE 24, PART 6

2016 CALIFORNIA HISTORICAL BUILDING CODE
CALIFORNIA CODE OF REGULATIONS
(CCR) TITLE 24, PART 8

2016 CALIFORNIA FIRE CODE (CFC)
CALIFORNIA CODE OF REGULATIONS
(CCR) TITLE 24, PART 9
(2015 INTERNATIONAL FIRE CODE (IFC) W/ CALIFORNIA AMENDMENTS)

2016 CALIFORNIA EXISTING BUILDING CODE
CALIFORNIA CODE OF REGULATIONS
(CCR) TITLE 24, PART 10
(2015 INTERNATIONAL EXISTING BUILDING CODE (IEBC) W/ CALIFORNIA AMENDMENTS)

2016 CALIFORNIA GREEN BUILDING STANDARDS CODE (CAL GREEN)
CALIFORNIA CODE OF REGULATIONS
(CCR) TITLE 24, PART 11

2016 CALIFORNIA REFERENCED STANDARDS CODE -CALIFORNIA CODE OF REGULATIONS
(CCR) TITLE 24, PART 12
1990 STATE FIRE MARSHAL REGULATIONS (AS AMENDED TO DATE) CALIFORNIA CODE OF REGULATIONS (CCR) TITLE 19

CALIFORNIA ELEVATOR SAFETY CODE, CALIFORNIA CODE OF REGULATIONS (CCR) TITLE 8
(AS AMENDED TO DATE)

2010 AMERICANS WITH DISABILITY ACT (ADA) STANDARDS FOR ACCESSIBLE DESIGN (ADAS)

APPLICABLE NFPA , UL AND ICC STANDARDS

NFPA 13	-	AUTOMATIC SPRINKLER SYSTEMS, 2016 EDITION
NFPA 14	-	STANDPIPE SYSTEMS, 2013 EDITION
NFPA 17	-	DRY CHEMICAL EXTINGUISHING SYSTEMS, 2013 EDITION
NFPA 17A	-	WET CHEMICAL SYSTEMS, 2013 EDITION
NFPA 20	-	STATIONARY PUMPS, 2016 EDITION
NFPA 22	-	WATER TANKS FOR PRIVATE FIRE PROTECTION, 2013 EDITION
NFPA 24	-	PRIVATE FIRE MAINS, 2016 EDITION
NFPA 25	-	WATER BASED FIRE PROTECTION SYSTEMS, 2013 EDITION
NFPA 72	-	NATIONAL FIRE ALARM CODE, 2016 EDITION
NFPA 80	-	FIRE DOORS AND OTHER OPENING PROTECTIVES, 2016 EDITION
NFPA 92	-	STANDARD FOR SMOKE CONTROL SYSTEMS, 2015 EDITION
NFPA 253	-	CRITICAL RADIANT FLUX OF FLOOR COVERINGS, 2015 EDITION
NFPA 2001	-	CLEAN AGENT FIRE EXTINGUISHING SYSTEMS, 2015 EDITION
ICC 300	-	ICC STANDARDS FOR BLEACHERS, FOLDING AND TELESCOPIC SEATING, AND GRANDSTANDS, 2012 EDITION
UL 300	-	FIRE TESTING OF FIRE EXTINGUISHING SYSTEMS FOR PROTECTION OF COMMERCIAL RESTAURANT COOKING AREAS, 2005 EDITION
UL 464	-	AUDIBLE SIGNAL APPLIANCES, 2003 EDITION
UL 521	-	HEAT DETECTORS FOR FIRE PROTECTIVE SIGNALING SYSTEMS, 1999 EDITION

NOTE: ALL NFPA STANDARDS AS LISTED ARE TO CONFORM TO THE EDITION AS LISTED WITH THE LATEST CALIFORNIA AMENDMENTS. REFERENCE THE 2016 CBC, TITLE 24, PART 2 - CHAPTER 35 FOR ADDITIONAL APPLICABLE NFPA, UL. STANDARDS AND ANY CALIFORNIA AMENDMENTS TO NFPA STANDARDS.

ARCHITECTS
WLC
CLIENT FOCUSED • PASSION DRIVEN

SOUTHERN CALIFORNIA
8163 ROCHESTER AVENUE, SUITE 100
RANCHO CUCAMONGA
CALIFORNIA 91730-0729

TEL: 909-987-0909
www.wlcarchitects.com

LONGFELLOW ELEMENTARY SCHOOL
HVAC REPLACEMENT
COMPTON UNIFIED SCHOOL DISTRICT
1101 S DWIGHT AVE.
COMPTON, CA 90220

LICENSED ARCHITECT
MARK GRAHAM
C-26046
03-31-19
STATE OF CALIFORNIA

CONSULTANT

IDENTIFICATION STAMP
DSA, OF THE STATE ARCHITECT
OFFICE OF REGULATION SERVICES
APPL 03-118423
AC FLS SS EY
DATE MAR 0 6 2018
FILE: 19-23

NO	DATE	BY	DESCRIPTION
1			REVISIONS

DRAWN:	CHECKED:
DATE: 3/6/2018	SCALE:
PROJECT NUMBER: 1723400	

ARCH DWGS ABBREVIATIONS & GOVERNING CODE

DRAWING NUMBER: A0.2

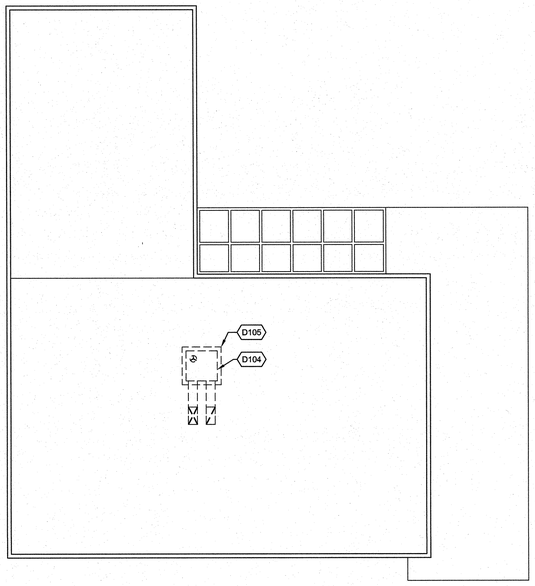

NORTH

BUILDING A - DEMO ROOF PLAN | 1/8" = 1'-0" | 2

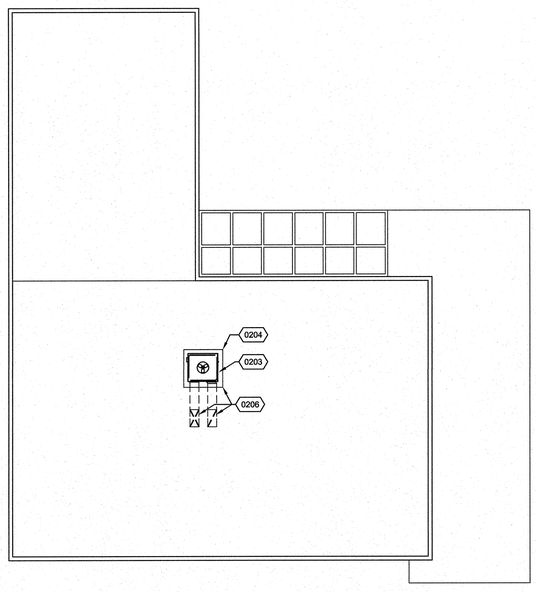

NORTH

BUILDING A - NEW ROOF PLAN | 1/8" = 1'-0" | 3

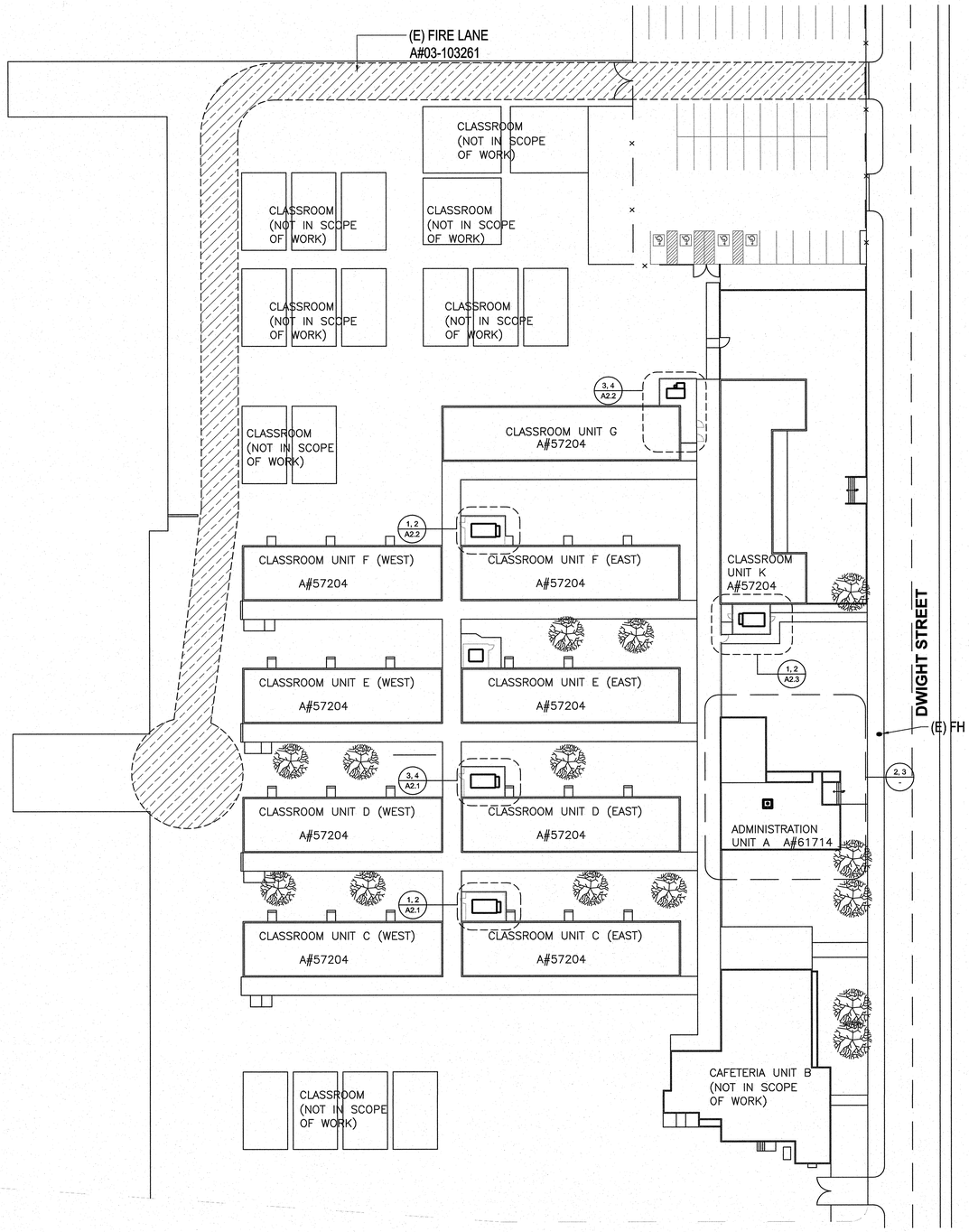

NORTH

SITE PLAN | 1" = 30'-0" | 1

-

D104 (E) HVAC UNIT TO BE REMOVED

D105 REMOVE (E) COUNTER FLASHING

0203 (N) HVAC UNIT, REF TO MECH DWGS.

0204 (N) 20 GA SHEET METAL COUNTER FLASHING, PAINTED

0206 PATCH ROOFING AT ROOF OPENING AND PLATFORM TO MATCH EXISTING ROOFING.

REFERENCE NOTES

BUILDING DATA

BUILDING	OCCU TYPE	CONSTR TYPE	AREA
A	B	TYPE V-B	3,194 SF
C	E	TYPE V-B	7,080 SF
D	E	TYPE V-B	7,080 SF
E	E	TYPE V-B	7,080 SF
F	E	TYPE V-B	7,080 SF
G	E	TYPE V-B	3,840 SF
K	E	TYPE V-B	4,462 SF

WLC ARCHITECTS
CLIENT FOCUSED • PASSION DRIVEN

SOUTHERN CALIFORNIA
8163 ROCHESTER AVENUE, SUITE 100
RANCHO CUCAMONGA
CALIFORNIA 91730-0729

TEL: 909-987-0909

www.wlcarchitects.com

LONGFELLOW ELEMENTARY SCHOOL HVAC REPLACEMENT

COMPTON UNIFIED SCHOOL DISTRICT

1101 S DWIGHT AVE.
COMPTON, CA 90220

LICENSED ARCHITECT
MARK GRAHAM
C-26046
03-31-19
STATE OF CALIFORNIA

CONSULTANT

IDENTIFICATION STAMP
DIV. OF THE STATE ARCHITECT
OFFICE OF REGULATION SERVICES
APPL 03-118423
AC — FLS — SS —
DATE MAR 0 6 2018
FILE: 19-23

NO	DATE	BY	DESCRIPTION
1			REVISIONS

DRAWN: CTW | CHECKED:
DATE: 3/6/2018 | SCALE:
PROJECT NUMBER: 1723400

SITE PLAN AND BUILDING A DEMO & NEW ROOF PLANS

DRAWING NUMBER: A1.0

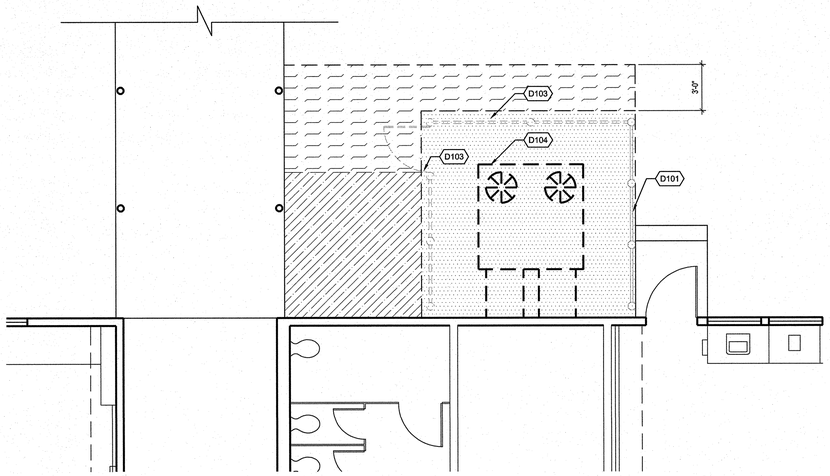

NORTH

BUILDING D - ENLARGED DEMO FLOOR PLAN | 1/4" = 1'-0" | 3

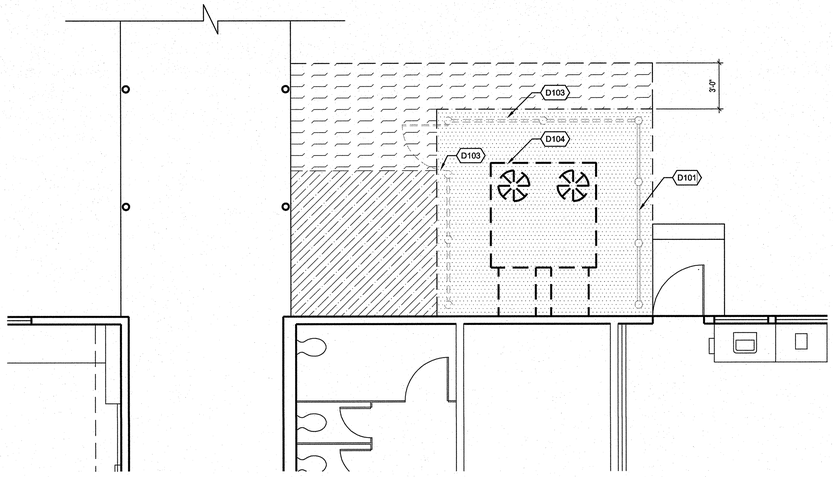

NORTH

BUILDING C - ENLARGED DEMO FLOOR PLAN | 1/4" = 1'-0" | 1

D101 (E) CHAIN LINK FENCE TO REMAIN.

D102 (E) CHAIN LINK GATE TO REMAIN.

D103 (E) CHAIN LINK FENCE, GATE, AND POST TO BE REMOVED AND AND PROTECTED FOR REINSTALLATION, TYP.

D104 (E) HVAC UNIT TO BE REMOVED

0201 RINSTALL (E) CHAIN LINK FENCE/GATE, REF TO DTL 6/A2.3

0202 (N) CHAIN LINK FENCE TO MATCH (E), REF TO DTL 6/A2.3

0203 (N) HVAC UNIT, REF TO MECH DWGS.

0205 (N) DUCT WORK, REF TO MECH DWGS.

REFERENCE NOTES

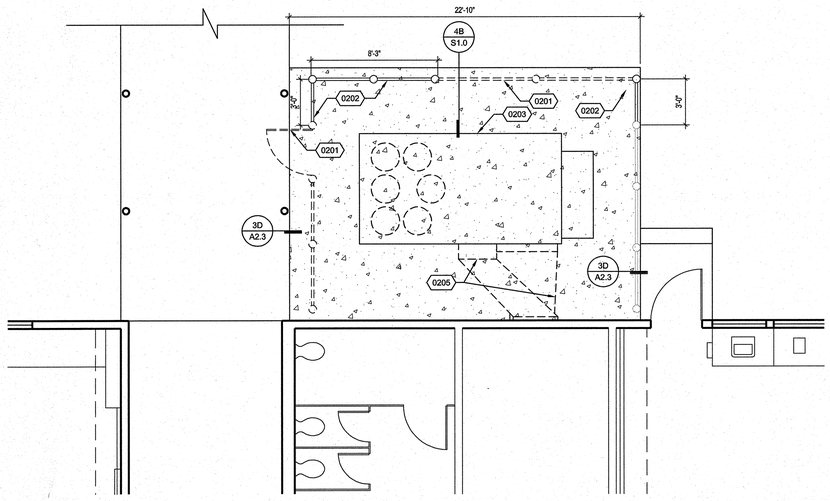

NORTH

BUILDING D - ENLARGED NEW FLOOR PLAN | 1/4" = 1'-0" | 4

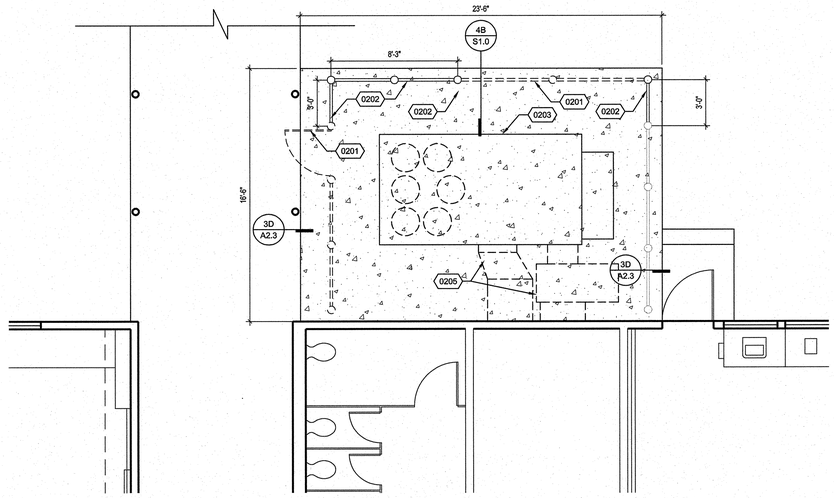

NORTH

BUILDING C - ENLARGED NEW FLOOR PLAN | 1/4" = 1'-0" | 2

DEMOLISH (E) AC PAVING

DEMOLISH (E) CONCRETE PAD

DEMOLISH (E) TURF

(N) CONCRETE PAD, REF TO DTL 3/A2.3

LEGEND

ARCHITECTS
WLC
CLIENT FOCUSED • PASSION DRIVEN

SOUTHERN CALIFORNIA
8163 ROCHESTER AVENUE, SUITE 100
RANCHO CUCAMONGA
CALIFORNIA 91730-0729

TEL: 909-987-0909

www.wlcarchitects.com

LONGFELLOW ELEMENTARY SCHOOL HVAC REPLACEMENT

COMPTON UNIFIED SCHOOL DISTRICT

1101 S DWIGHT AVE.
COMPTON, CA 90220

LICENSED ARCHITECT
MARK GRAHAM
C-26046
03-31-19
STATE OF CALIFORNIA

CONSULTANT

IDENTIFICATION STAMP
DSA / OF THE STATE ARCHITECT
OFFICE OF REGULATION SERVICES
APPL 03-118423
FILE: 19-23
AC — FLS — SS
DATE MAR 07 2018

NO	DATE	BY	DESCRIPTION
1			REVISIONS

DRAWN: CTW	CHECKED:
DATE: 3/6/2018	SCALE:
PROJECT NUMBER: 1723400	

BUILDING C & D ENLARGED DEMO & NEW FLOOR PLANS

DRAWING NUMBER: A2.1

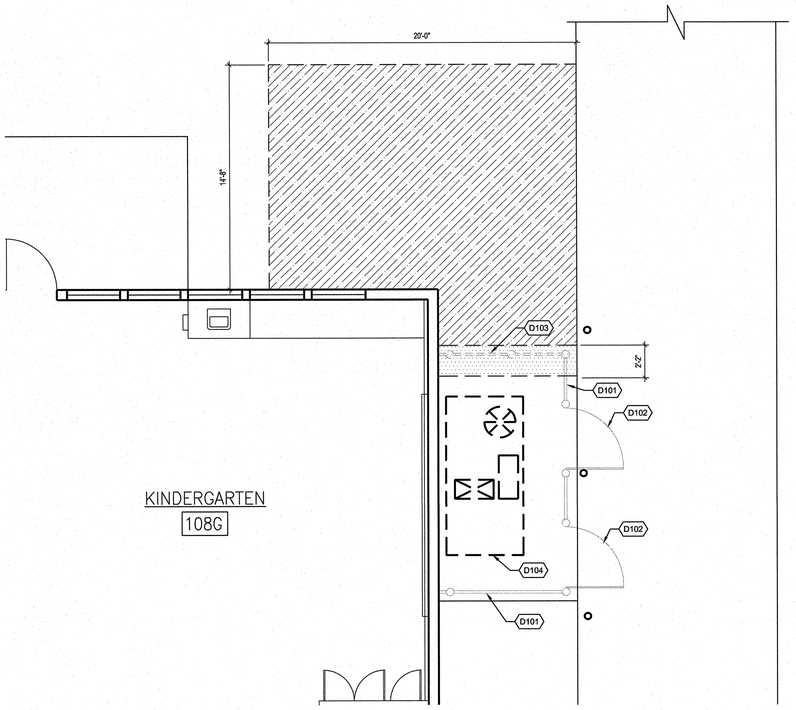

BUILDING G - ENLARGED DEMO FLOOR PLAN | 1/4" = 1'-0" | 3

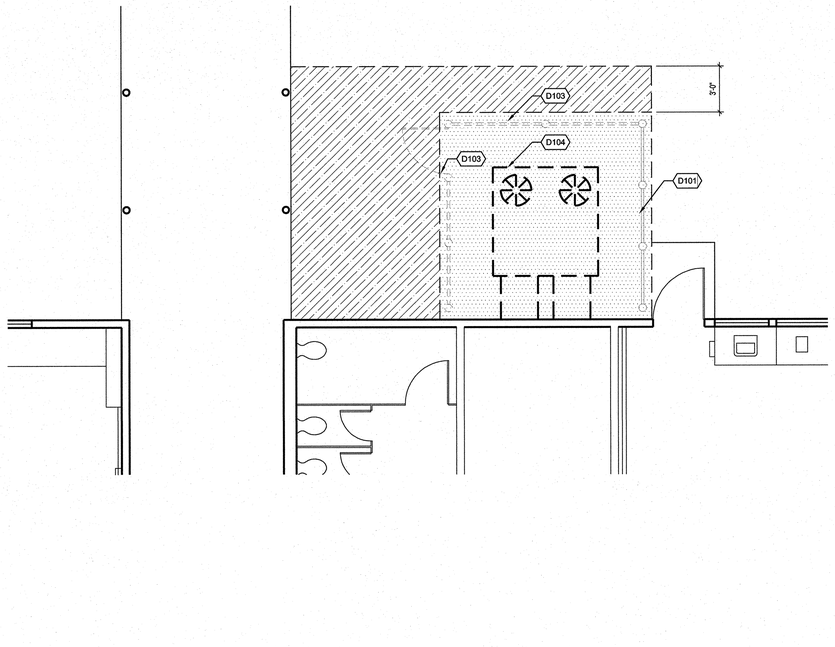

BUILDING F - ENLARGED DEMO FLOOR PLAN | 1/4" = 1'-0" | 1

D101 (E) CHAIN LINK FENCE TO REMAIN.

D102 (E) CHAIN LINK GATE TO REMAIN.

D103 (E) CHAIN LINK FENCE, GATE, AND POST TO BE REMOVED AND AND PROTECTED FOR REINSTALLATION, TYP.

D104 (E) HVAC UNIT TO BE REMOVED

0201 RINSTALL (E) CHAIN LINK FENCE/GATE, REF TO DTL 6/A2.3

0202 (N) CHAIN LINK FENCE TO MATCH (E), REF TO DTL 6/A2.3

0203 (N) HVAC UNIT, REF TO MECH DWGS.

0204 (N) CHAIN LINK FENCE GATE TO MATCH (E), REF TO DTL 7/A2.3

0205 (N) DUCT WORK, REF TO MECH DWGS.

REFERENCE NOTES

DEMOLISH (E) AC PAVING

DEMOLISH (E) CONCRETE PAD

DEMOLISH (E) TURF

(N) CONCRETE PAD, REF TO DTL 3/A2.3

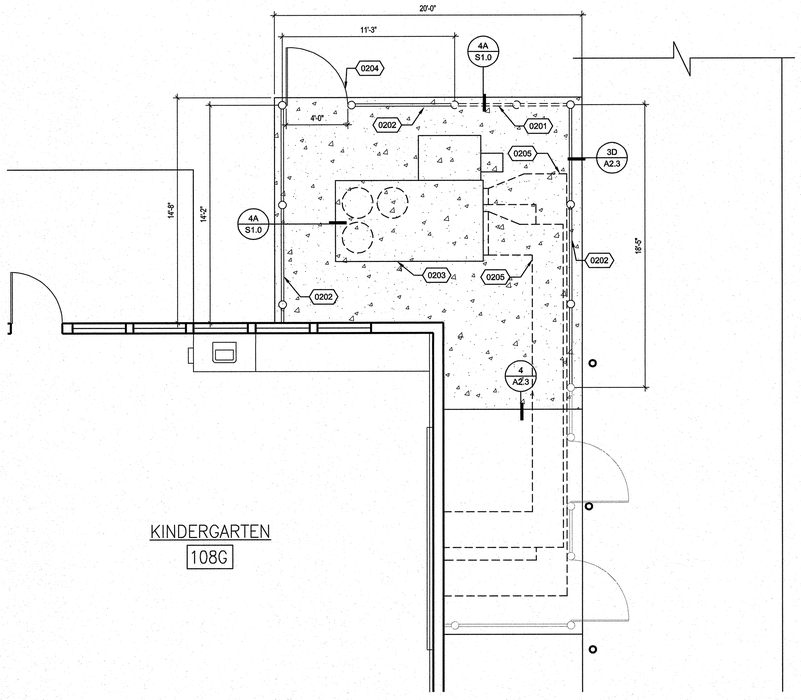

BUILDING G - ENLARGED NEW FLOOR PLAN | 1/4" = 1'-0" | 4

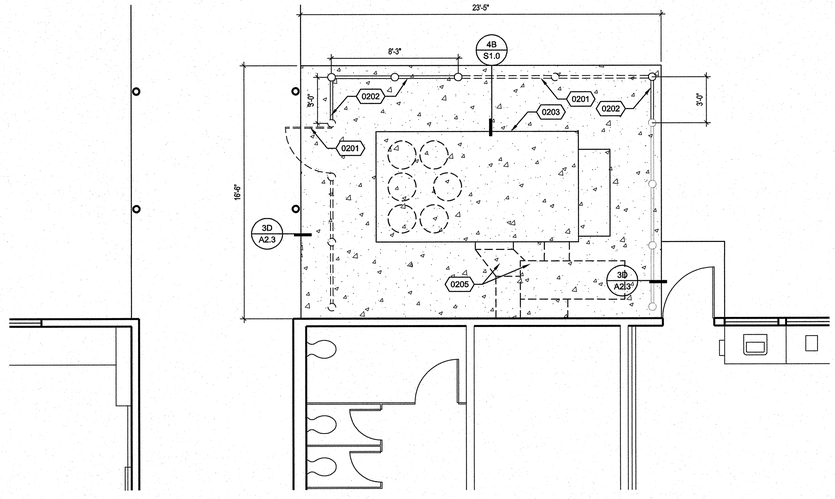

BUILDING F - ENLARGED NEW FLOOR PLAN | 1/4" = 1'-0" | 2

LEGEND

ARCHITECTS
WLC
CLIENT FOCUSED • PASSION DRIVEN

SOUTHERN CALIFORNIA
8163 ROCHESTER AVENUE, SUITE 100
RANCHO CUCAMONGA
CALIFORNIA 91730-0729

TEL: 909-987-0909

www.wlcarchitects.com

LONGFELLOW ELEMENTARY SCHOOL HVAC REPLACEMENT

COMPTON UNIFIED SCHOOL DISTRICT

1101 S DWIGHT AVE.
COMPTON, CA 90220

LICENSED ARCHITECT
MARK GRAHAM
C-28046
03-31-19
STATE OF CALIFORNIA

CONSULTANT

IDENTIFICATION STAMP
DIV. OF THE STATE ARCHITECT
OFFICE OF REGULATION SERVICES
APPL 03-118423
AC FLS SS EV
DATE MAY 0 8 2019
FILE: 19-23

NO	DATE	BY	DESCRIPTION
1			REVISIONS

DRAWN: CTW | CHECKED:
DATE: 3/6/2018 | SCALE:
PROJECT NUMBER: 1723400

BUILDING F & G ENLARGED DEMO & NEW FLOOR PLANS

DRAWING NUMBER: A2.2

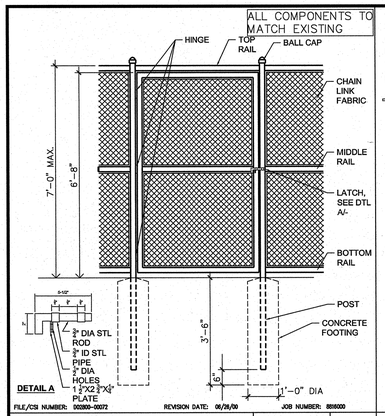

CHAINLINK FENCE GATE | 1/2"=1'-0" | 7

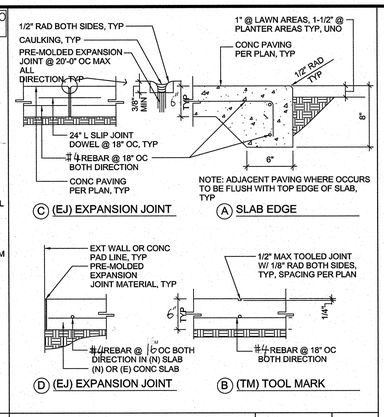

NEW CONC PAVING | 1-1/2" = 1'-0" | 3

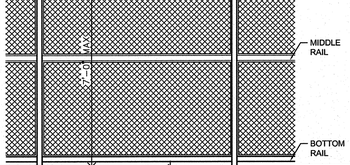

NEW CONC PAVING | 1-1/2" = 1'-0" | 4

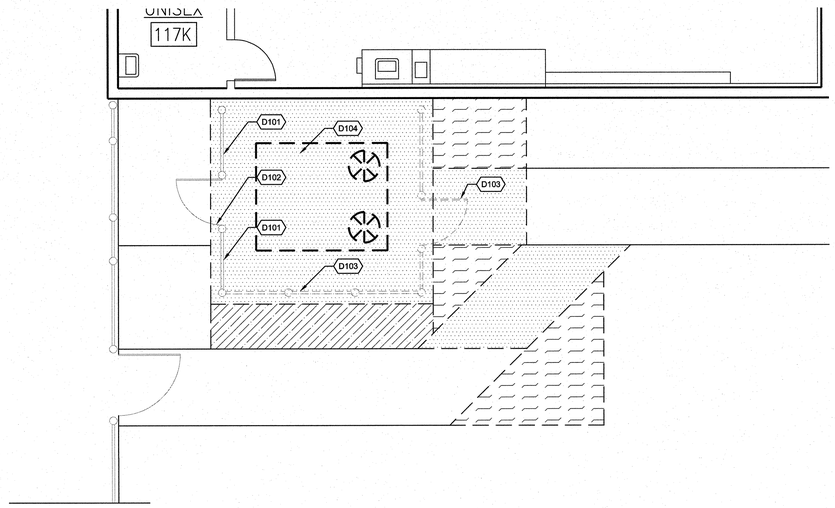

BUILDING K - ENLARGED DEMO FLOOR PLAN | 1/4" = 1'-0" | 1

NORTH

REFERENCE NOTES

- D101 (E) CHAIN LINK FENCE TO REMAIN.
- D102 (E) CHAIN LINK GATE TO REMAIN.
- D103 (E) CHAIN LINK FENCE, GATE, AND POST TO BE REMOVED AND AND PROTECTED FOR REINSTALLATION, TYP.
- D104 (E) HVAC UNIT TO BE REMOVED
- 0201 RINSTALL (E) CHAIN LINK FENCE/GATE, REF TO DTL 6/A2.3
- 0202 (N) CHAIN LINK FENCE TO MATCH (E), REF TO DTL 6/A2.3
- 0203 (N) HVAC UNIT, REF TO MECH DWGS.
- 0205 (N) DUCT WORK, REF TO MECH DWGS.

-	8	NEW CONC PAVING	1-1/2" = 1'-0" | 4

-	9	-	- | 5

-	10	CHAIN LINK FENCE	1/2" = 1'-0" | 6

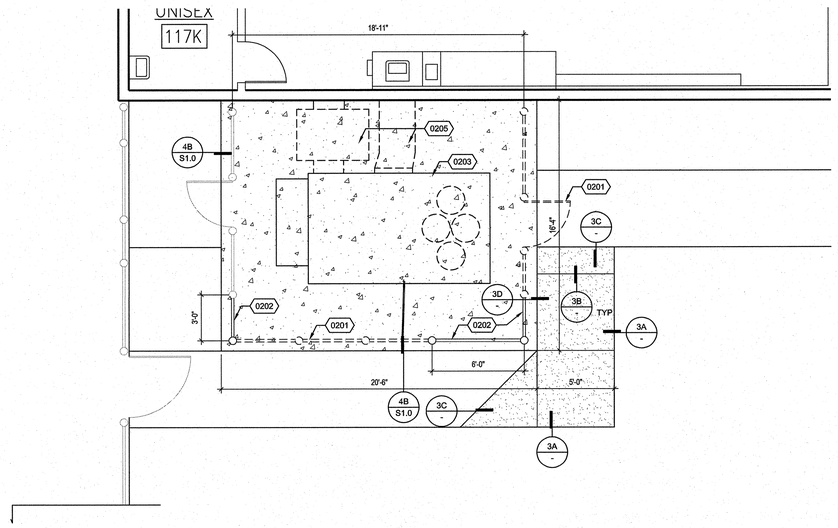

BUILDING K - ENLARGED NEW FLOOR PLAN | 1/4" = 1'-0" | 2

NORTH

LEGEND

- DEMOLISH (E) AC PAVING
- DEMOLISH (E) CONCRETE PAD
- DEMOLISH (E) TURF
- (N) CONCRETE PAD, REF TO DTL 3/A2.3
- (N) CONCRETE PAVING, REF TO DTL 3 & 4/A2.3

ARCHITECTS WLC
CLIENT FOCUSED • PASSION DRIVEN

SOUTHERN CALIFORNIA
8163 ROCHESTER AVENUE, SUITE 100
RANCHO CUCAMONGA
CALIFORNIA 91730-0729
TEL: 909-987-0909
www.wlcarchitects.com

LONGFELLOW ELEMENTARY SCHOOL HVAC REPLACEMENT

COMPTON UNIFIED SCHOOL DISTRICT
1101 S DWIGHT AVE.
COMPTON, CA 90220

LICENSED ARCHITECT MARK GRAHAM C-26046 03-31-19 STATE OF CALIFORNIA

CONSULTANT

IDENTIFICATION STAMP DIV. OF THE STATE ARCHITECT OFFICE OF REGULATION SERVICES
FILE: 19-23
APPL 03-118423
AC FLS SS
DATE MAR 06 2018

NO	DATE	BY	DESCRIPTION
1			REVISIONS

DRAWN: CTW	CHECKED:
DATE: 3/6/2018	SCALE:
PROJECT NUMBER: 1723400	

BLDG K ENLARGED DEMO & NEW FLOOR PLANS AND DETAILS

DRAWING NUMBER: A2.3

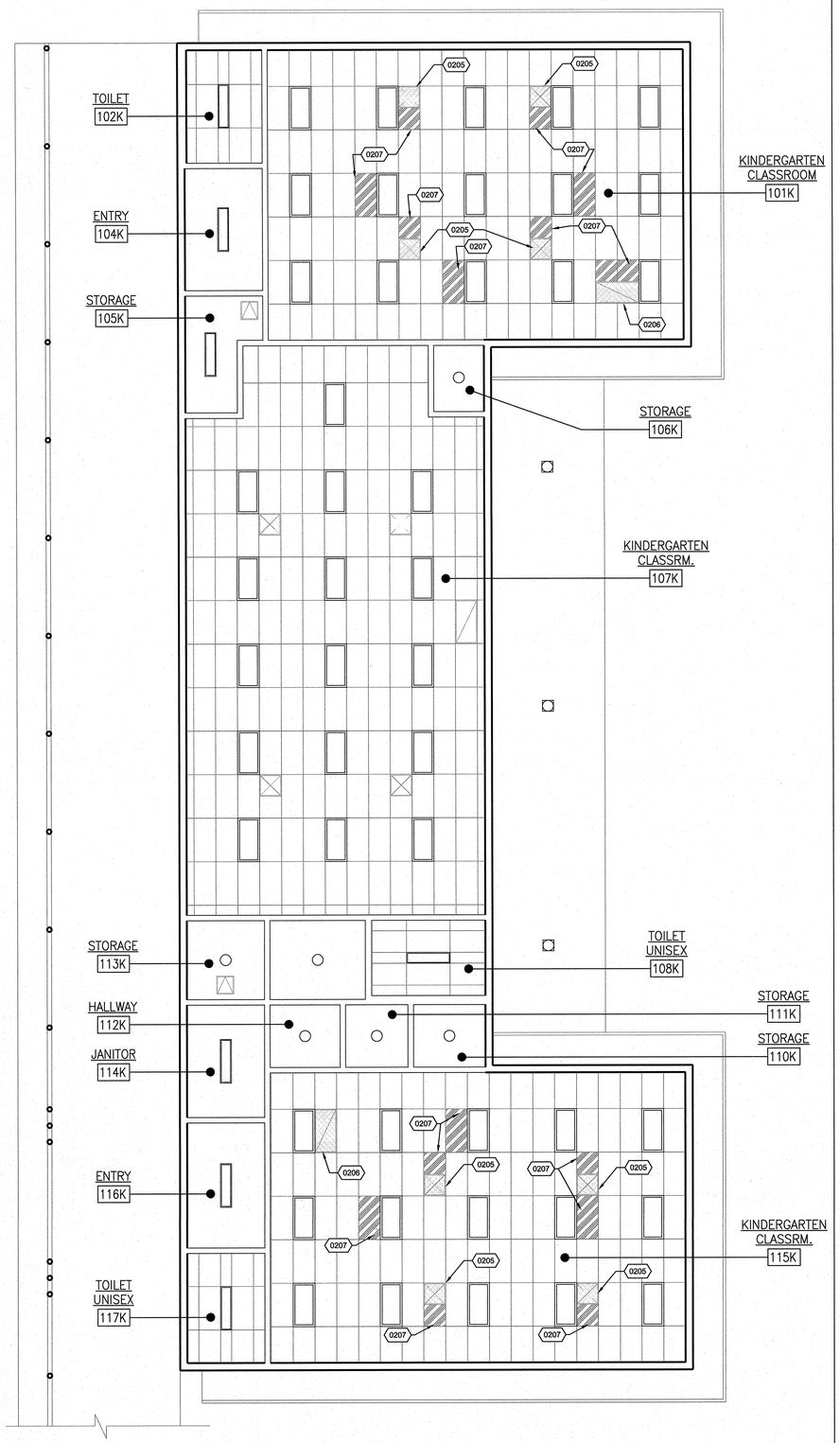

BUILDING K - ENLARGED NEW REFLECTED CEILING PLAN | 3/16" = 1'-0" | 2

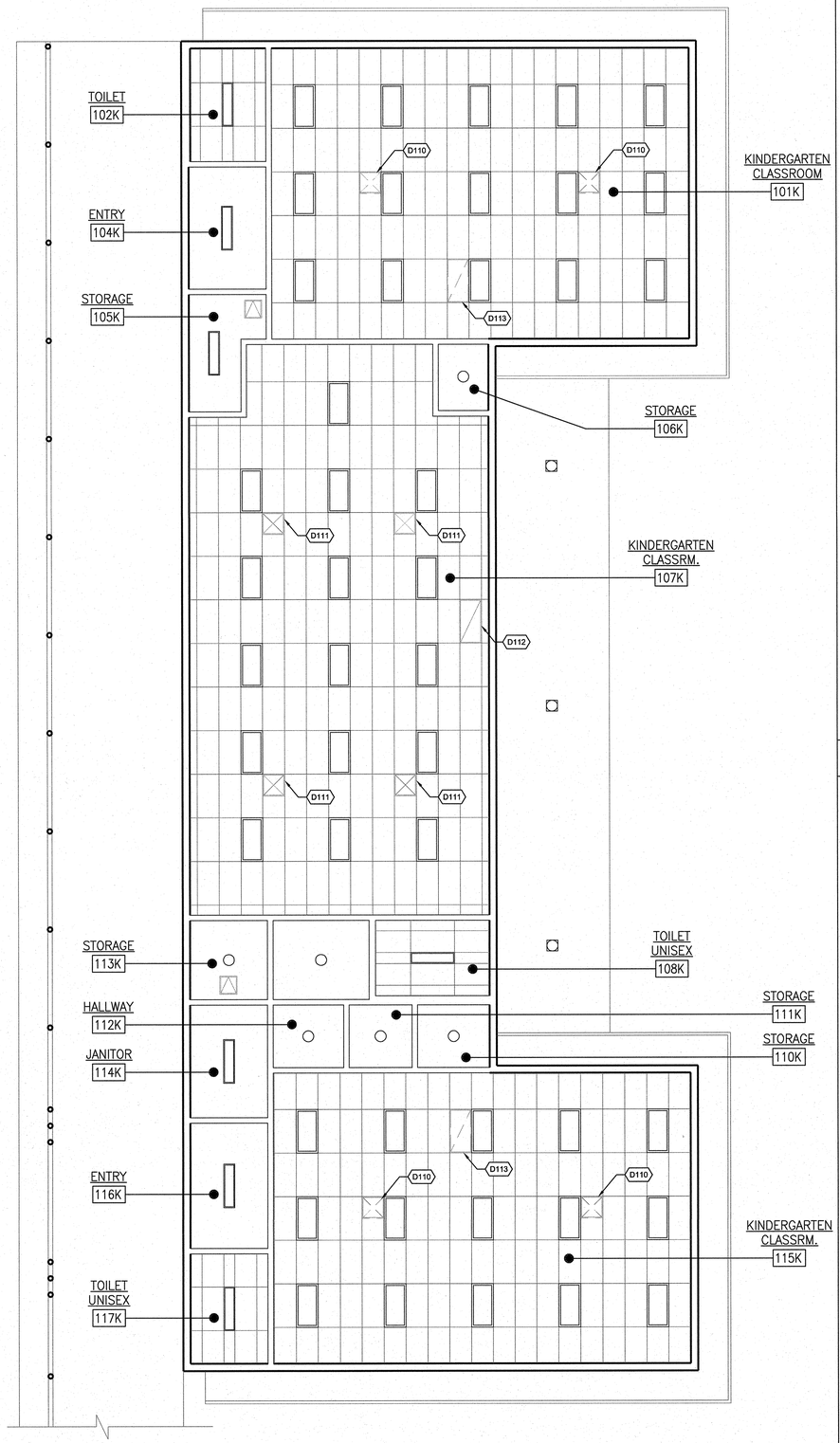

BUILDING K - ENLARGED DEMO REFLECTED CEILING PLAN | 3/16" = 1'-0" | 1

D110 (E) SUPPLY AIR DIFFUSER TO BE REMOVED
D111 (E) SUPPLY AIR DIFFUSER TO REMAIN
D112 (E) RETURN GRILL TO REMAIN
D113 (E) RETURN GRILL TO BE REMOVED
0205 (N) SUPPLY AIR DIFFUSER, REF TO MECH DWGS
0206 (N) RETURN AIR GRILLE, REF TO MECH DWGS
0207 (N) CEILING TILE TO MATCH EXISTING AND MODIFY THE CEILING GRILL TO FIT THE (N) DIFFUSER OR GRILLE

REFERENCE NOTES

1. IT IS THE MECHANICAL CONTRACTOR'S RESPONSE TO MODIFIED THE EXISTING CEILING GRILL AND CEILING TILE TO FIT THE NEW SUPPLY DIFFUSER AND RETURN GRILLE, AND PROVIDE THE NEW CEILING TILE FOR THE REMAIN EXISTING OPENING.

GENERAL NOTES

WLC ARCHITECTS
CLIENT FOCUSED • PASSION DRIVEN
SOUTHERN CALIFORNIA
8163 ROCHESTER AVENUE, SUITE 100
RANCHO CUCAMONGA
CALIFORNIA 91730-0729
TEL: 909-987-0909
www.wlcarchitects.com

LONGFELLOW ELEMENTARY SCHOOL
HVAC REPLACEMENT
COMPTON UNIFIED SCHOOL DISTRICT
1101 S DWIGHT AVE.
COMPTON, CA 90220

LICENSED ARCHITECT
MARK GRAHAM
C-26046
03-31-19
STATE OF CALIFORNIA

CONSULTANT

IDENTIFICATION STAMP
DIV. OF THE STATE ARCHITECT
OFFICE OF REGULATION SERVICES
APPL 03-118423
FILE: 19-23
AC FLS SS EY
DATE MAR 06 2018

NO	DATE	BY	DESCRIPTION
#	REVISIONS		

DRAWN: CTW	CHECKED:
DATE: 3/6/2018	SCALE:
PROJECT NUMBER: 1723400	

BUILDING K ENLARGED DEMO & NEW REFEL CEILING PLANS

DRAWING NUMBER: A3.1

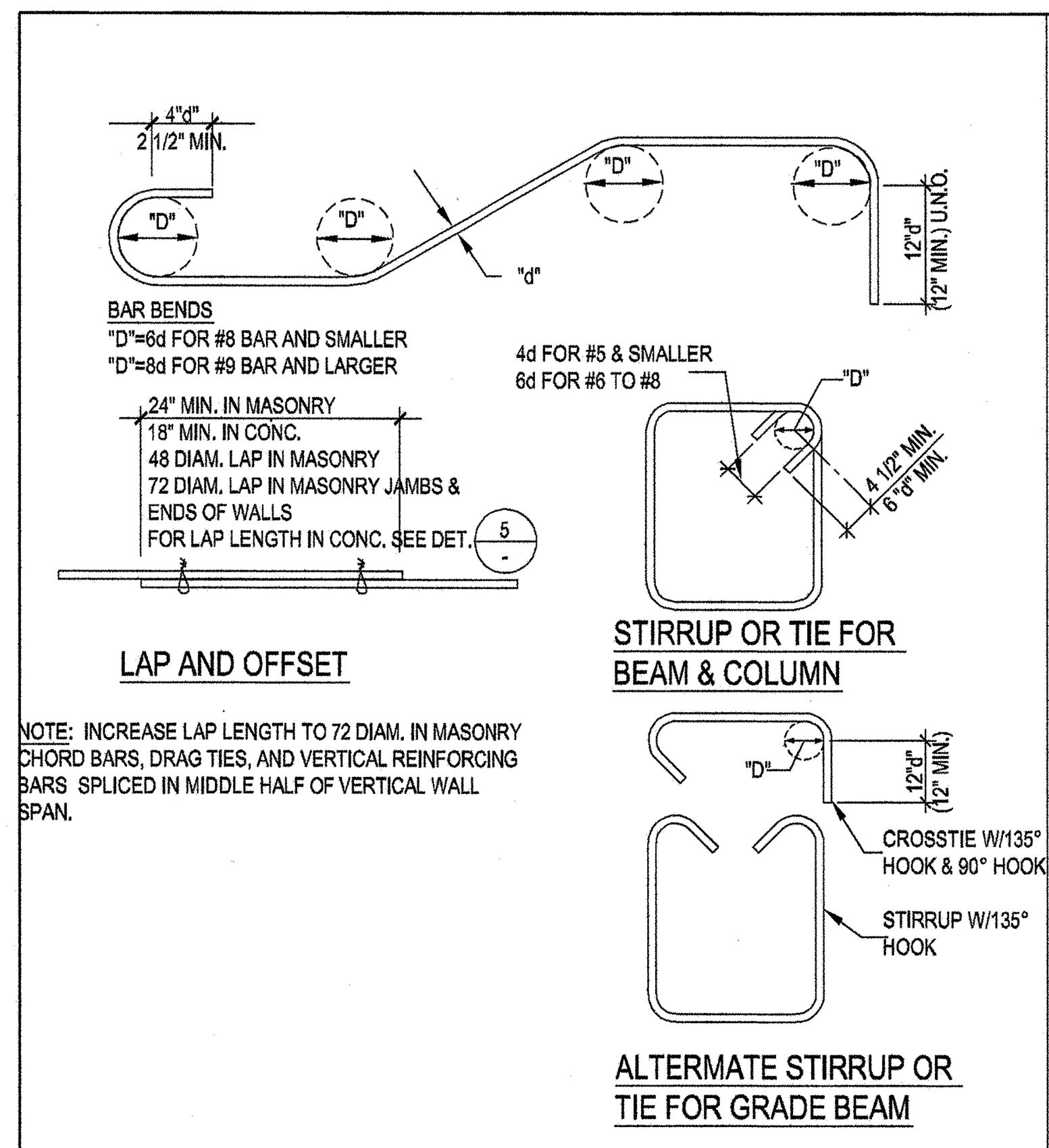

REINFORCING HOOKS AND BENDS 3/4"=1'-0" 1

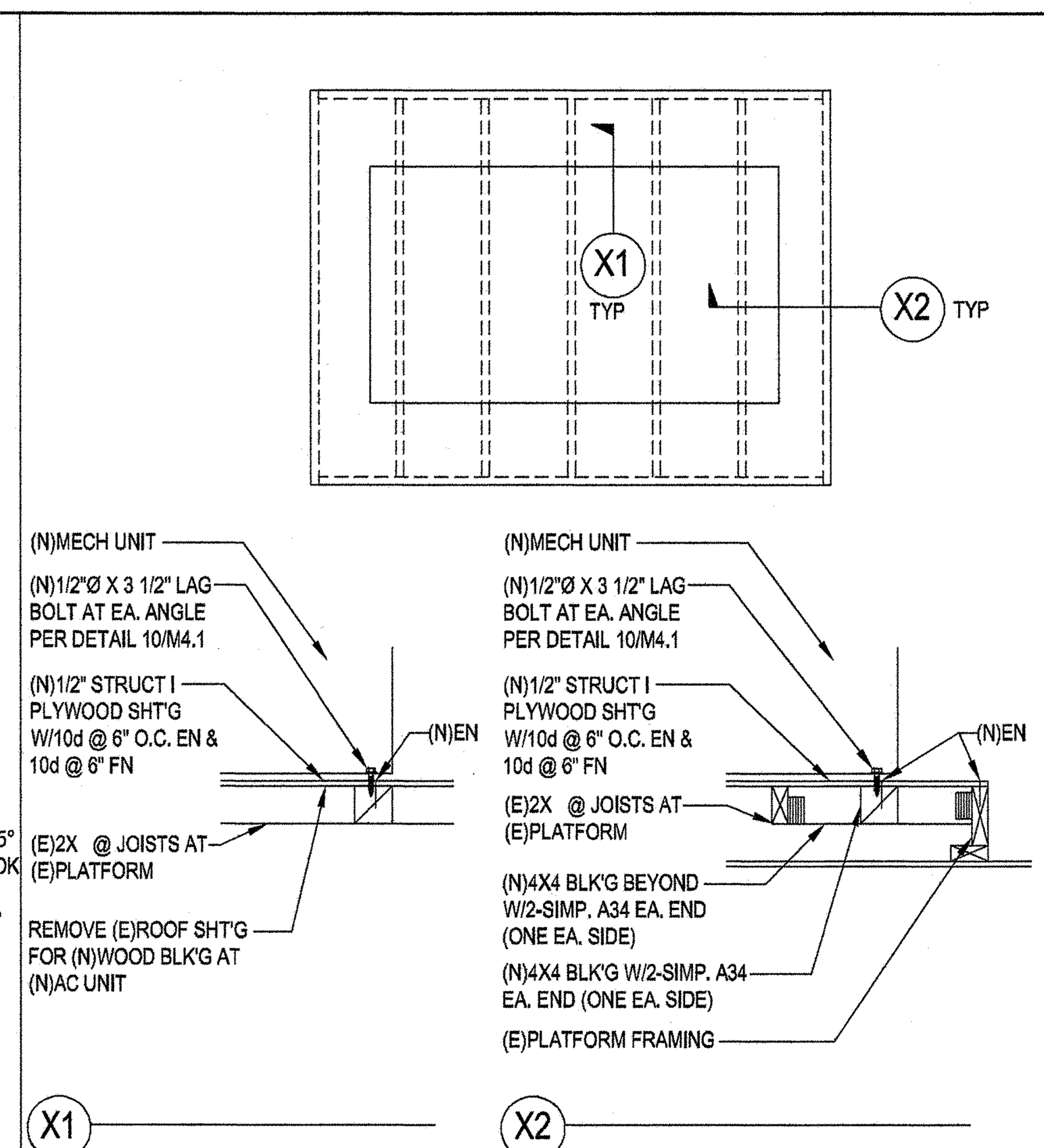

MECH'L PLATFORM 3/4"=1'-0" 2

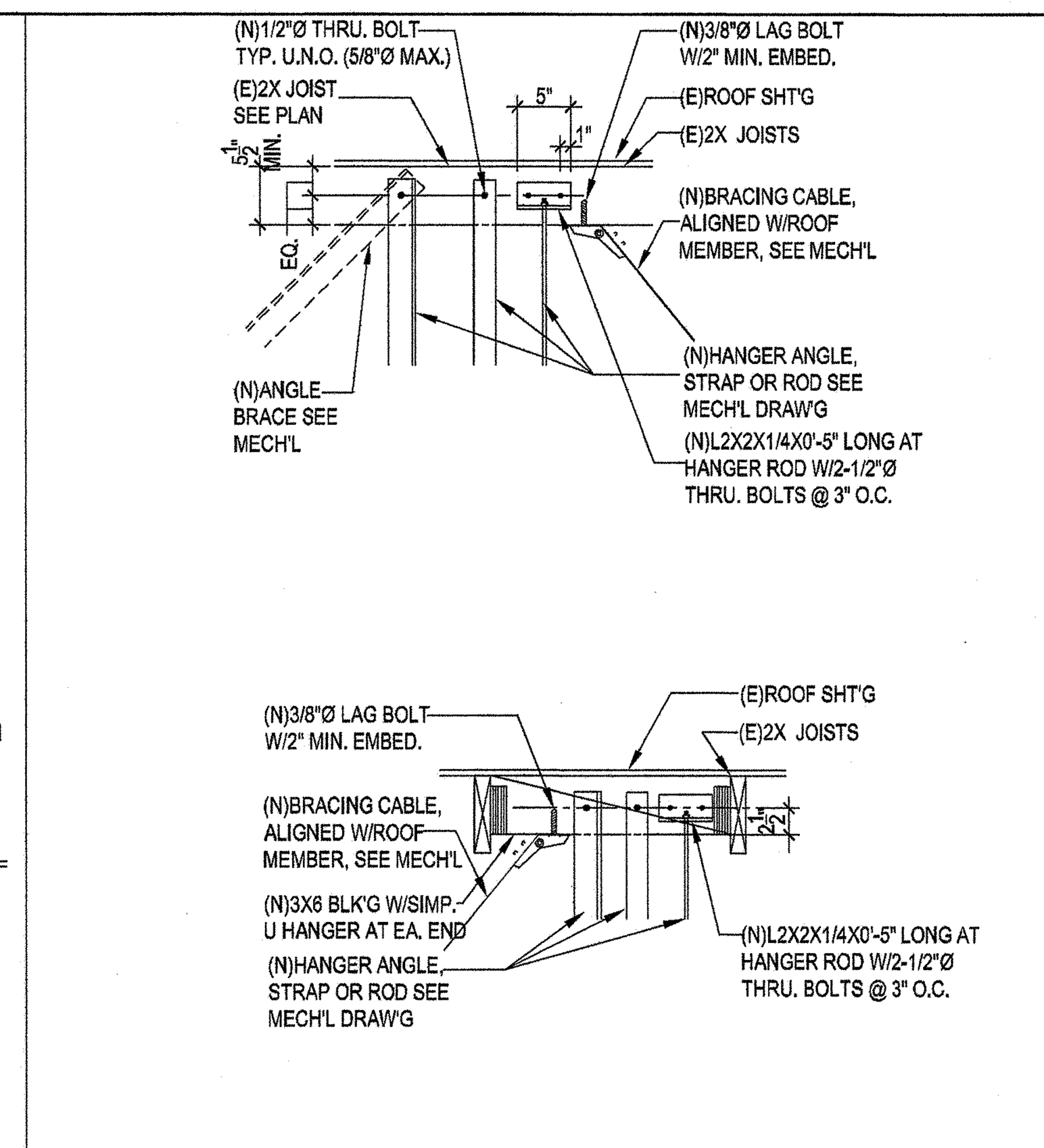

HANGER ANGLE, ROD OR STRAP & BRACE TO (E)ROOF STRUCTURE 3/4"=1'-0" 3

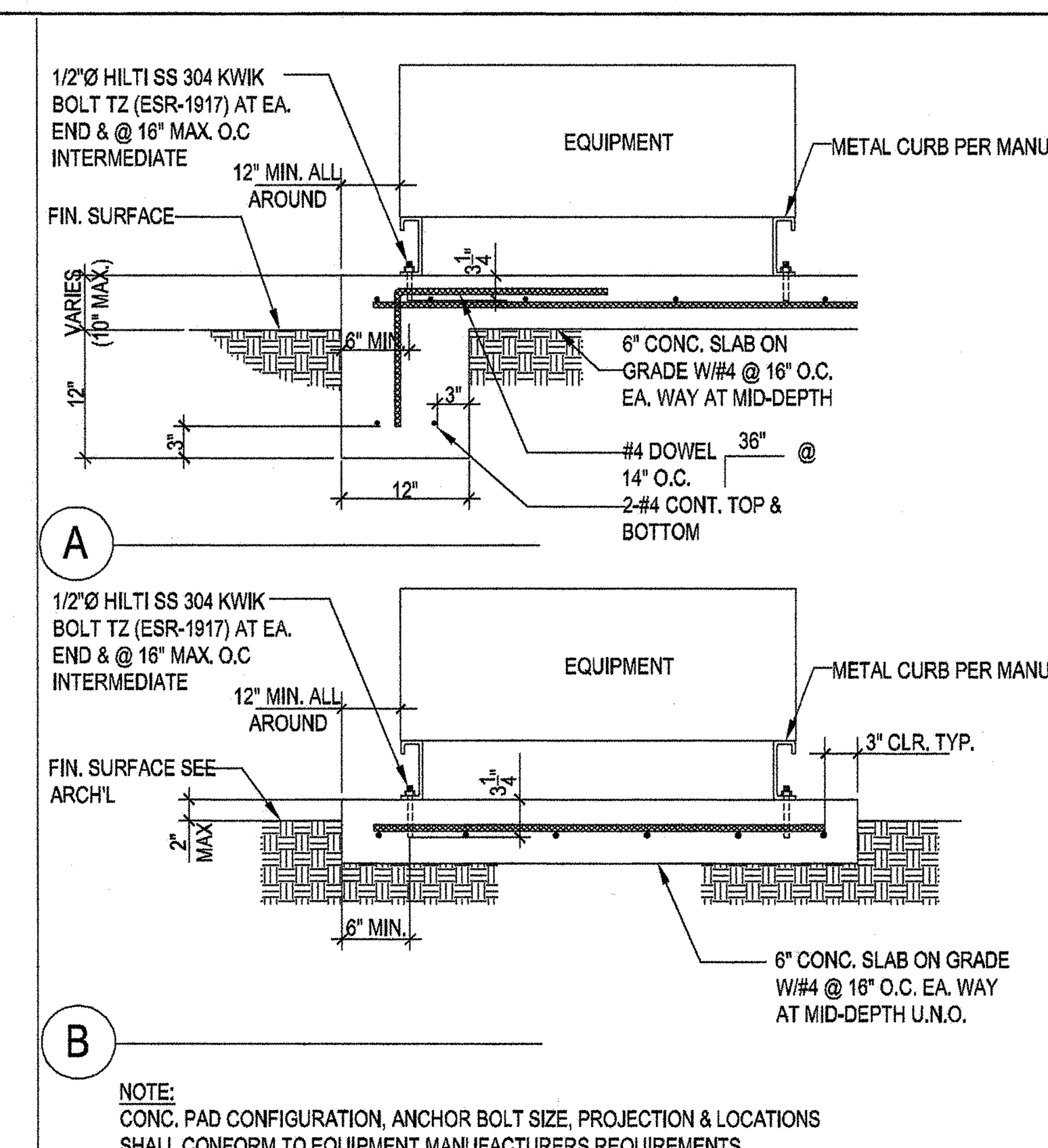

HOUSE KEEPING OR EQUIPMENT PAD 3/4"=1'-0" 4

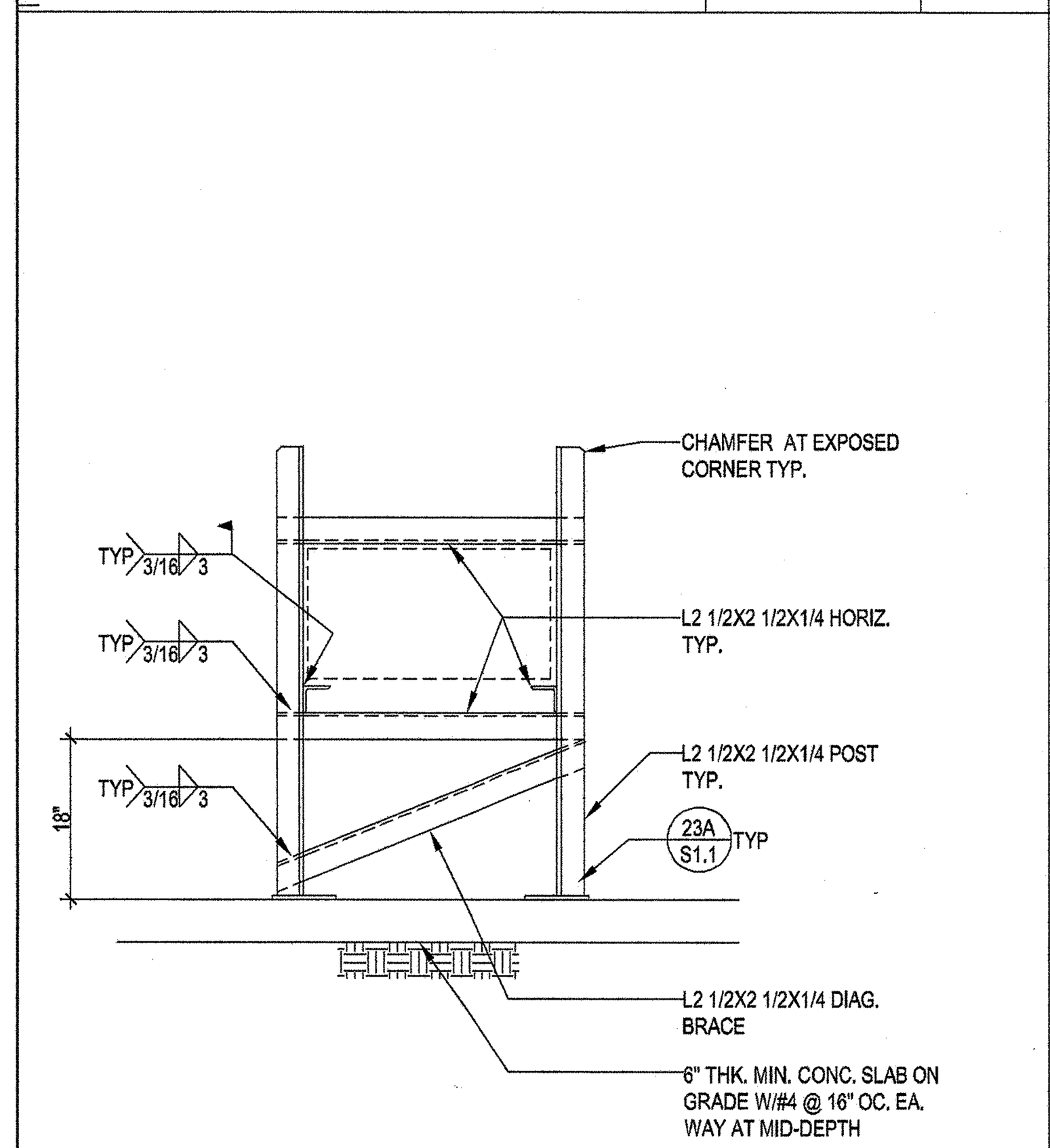

3/4"=1'-0" 7

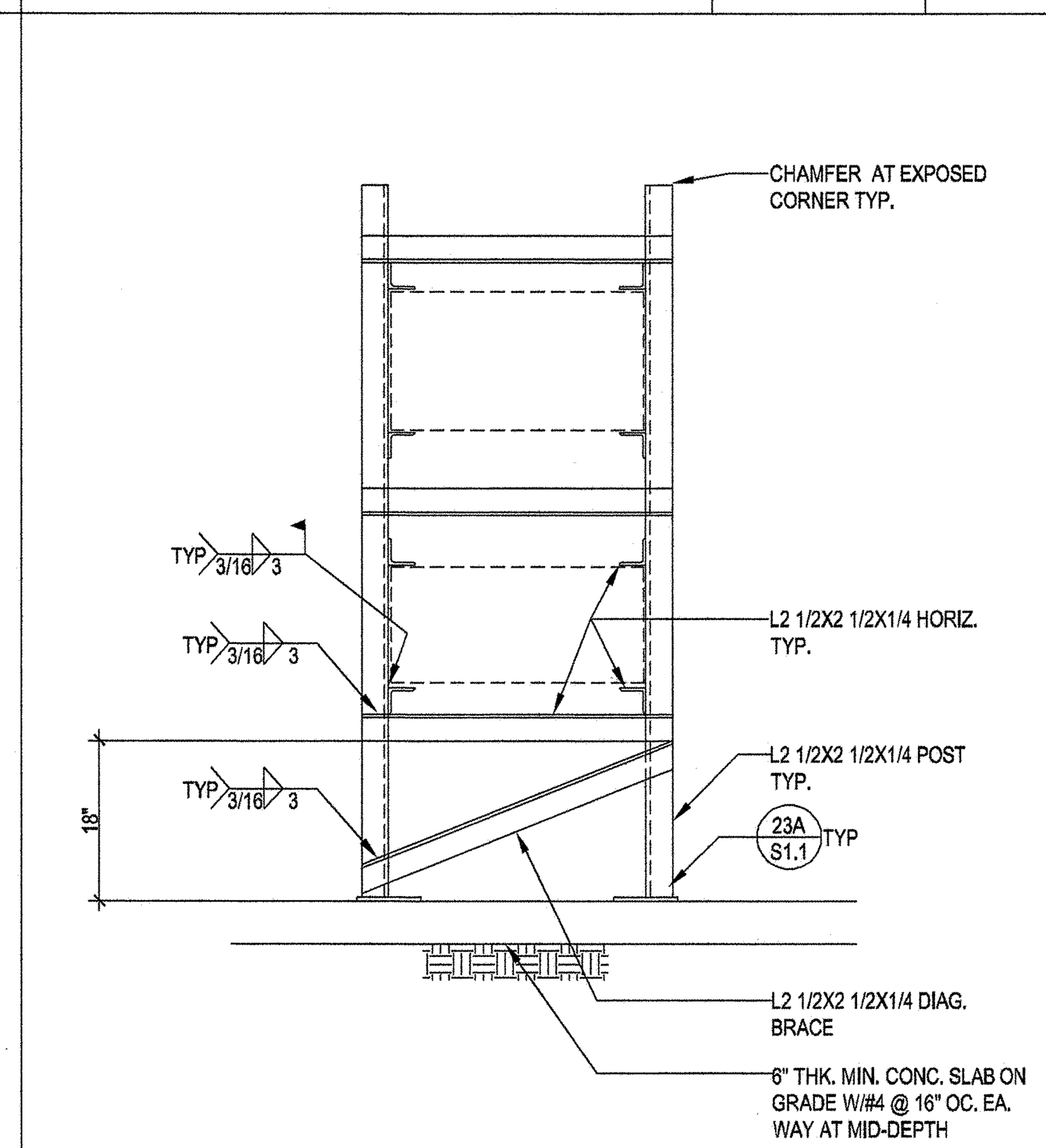

3/4"=1'-0" 8

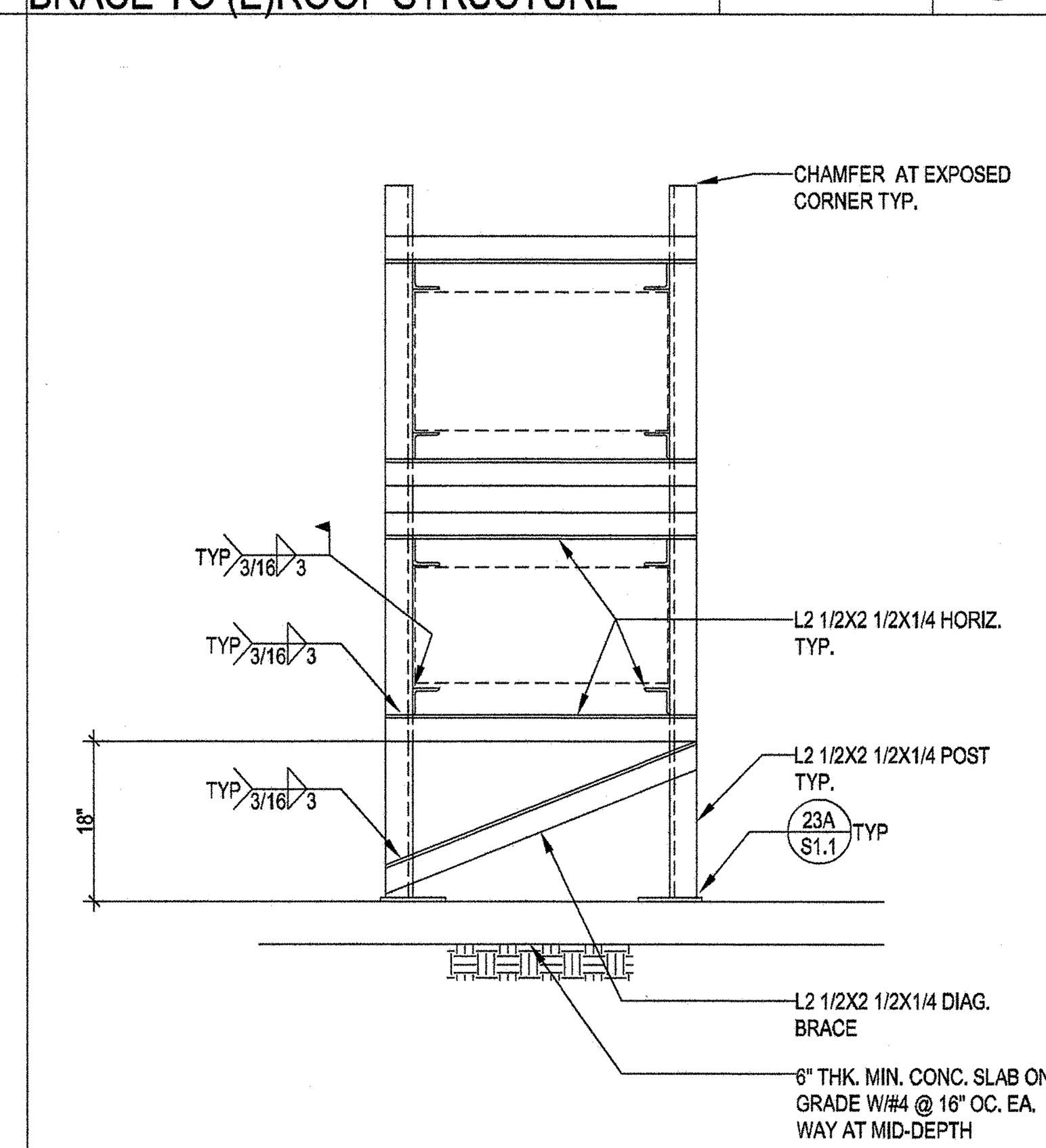

3/4"=1'-0" 9

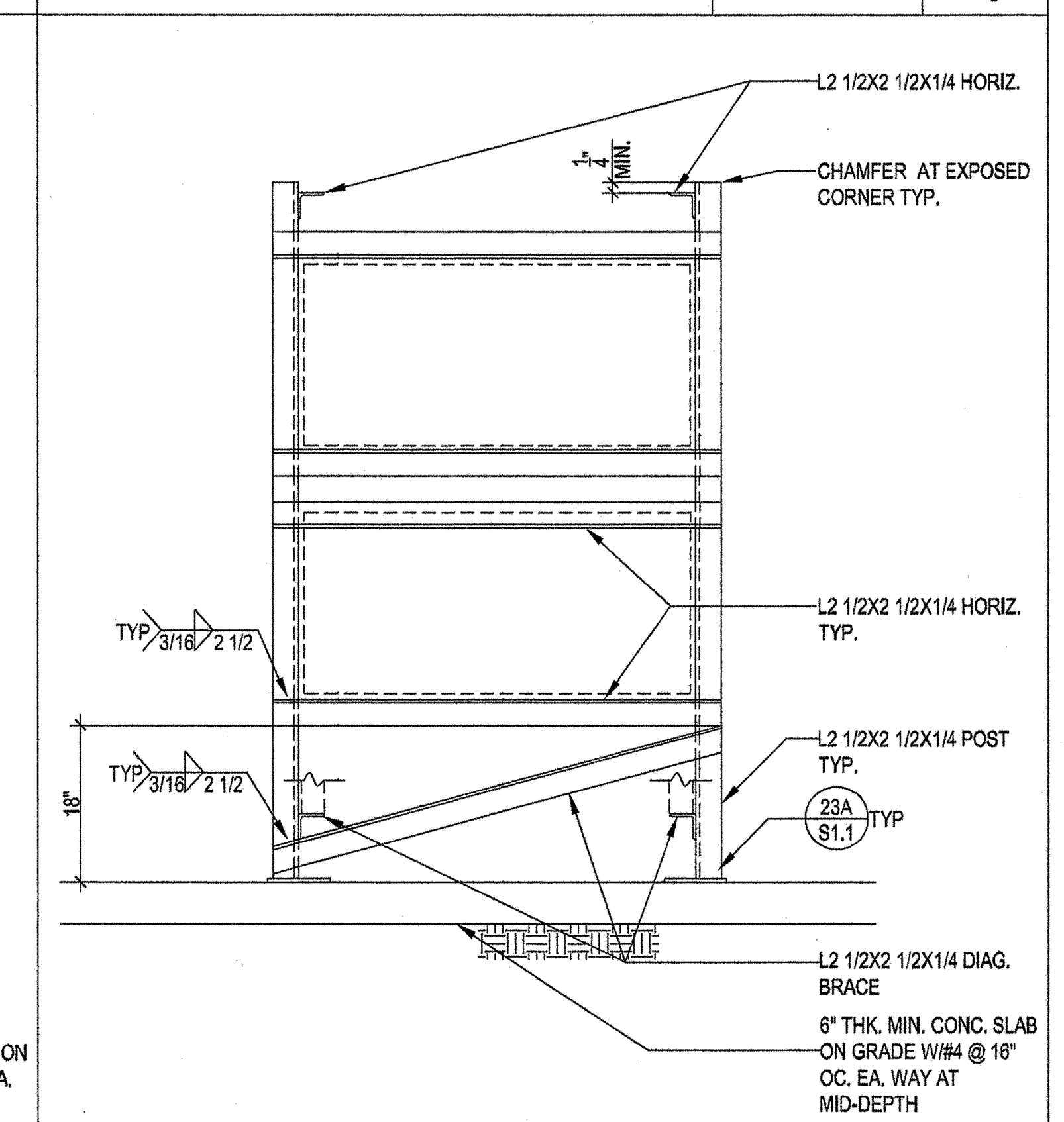

3/4"=1'-0" 10

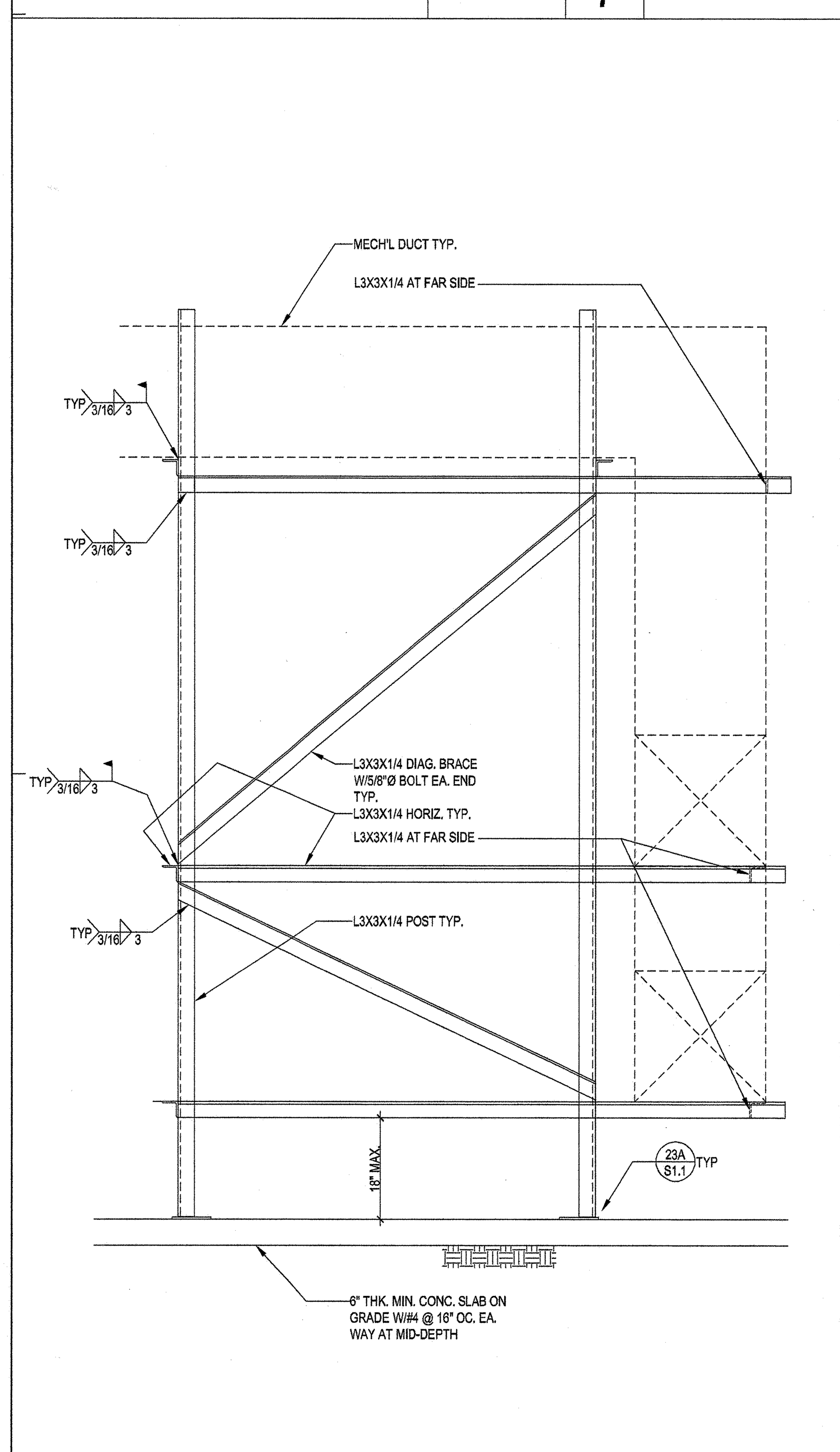

3/4"=1'-0" 19

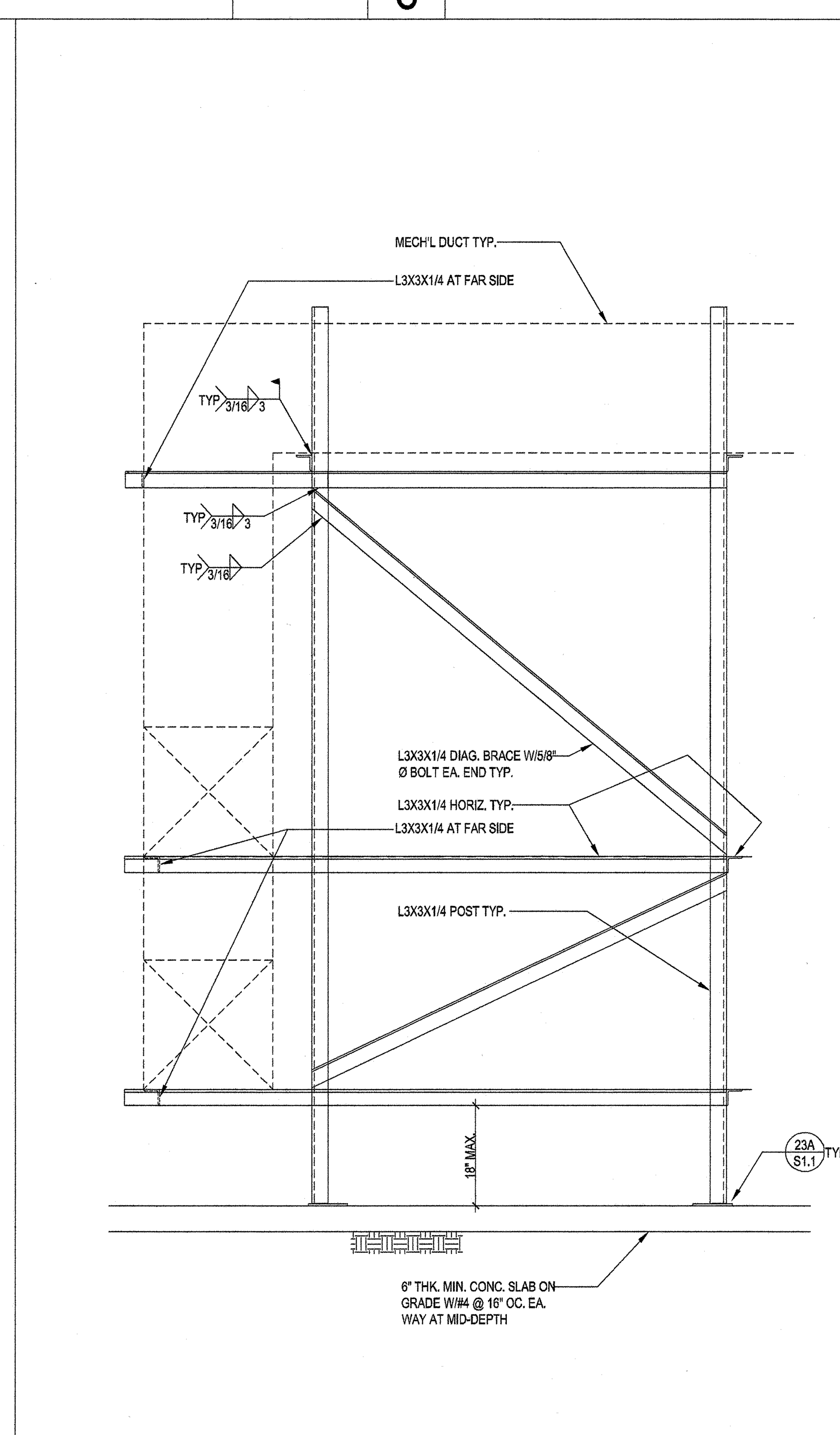

3/4"=1'-0" 21

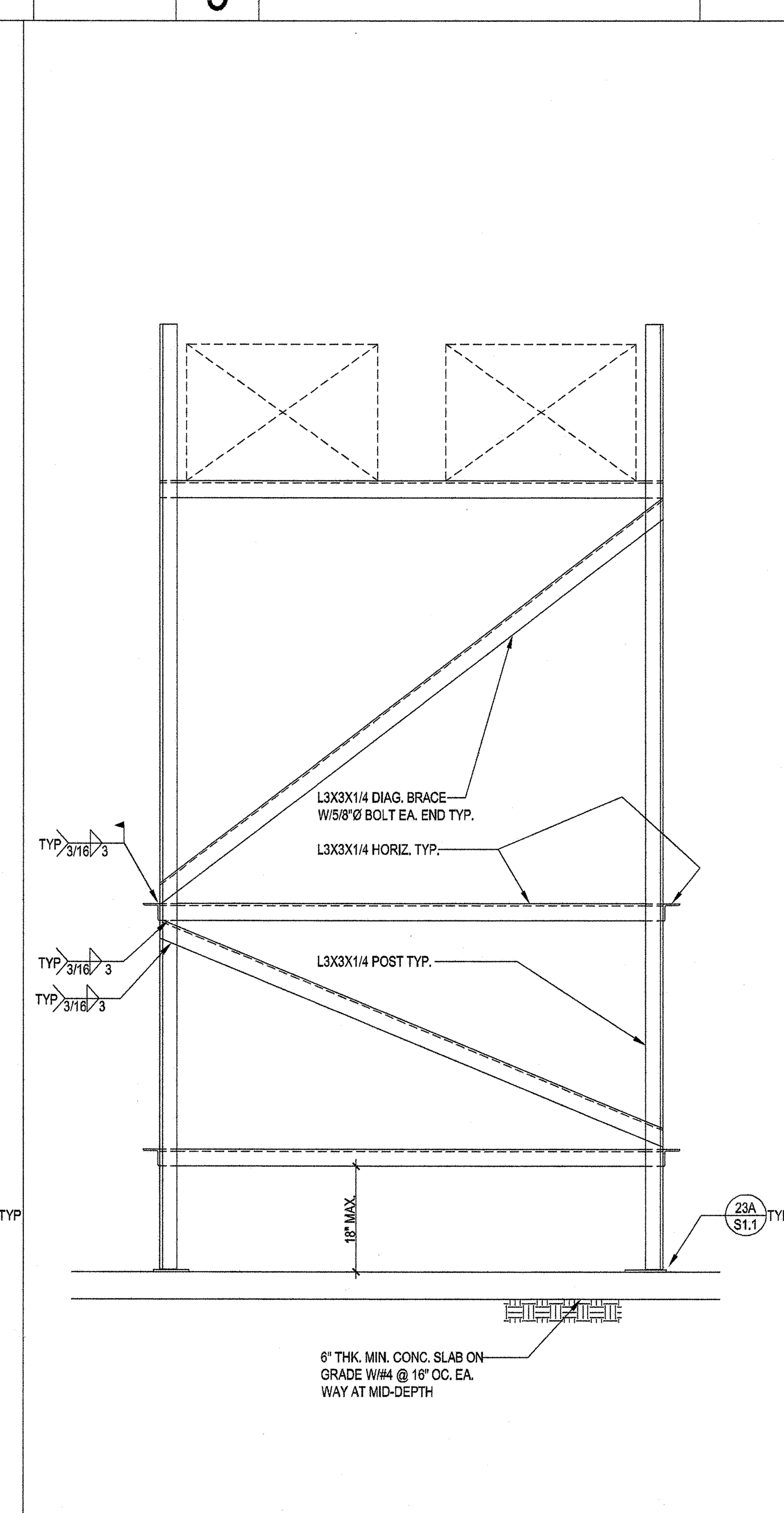

3/4"=1'-0" 22

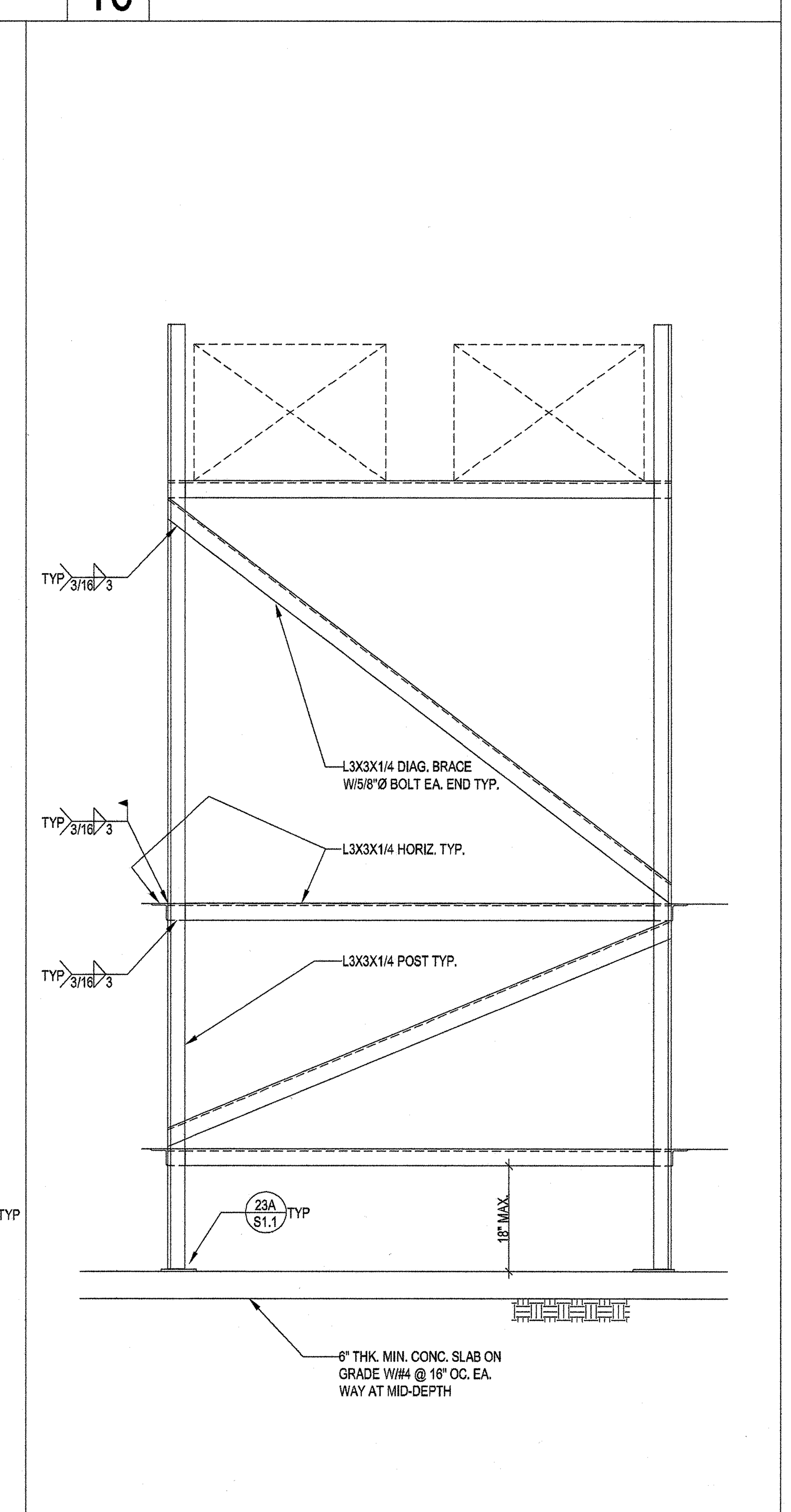

3/4"=1'-0" 23

LUMBER

1. ALL STRUCTURAL LUMBER SHALL BE GRADED IN ACCORDANCE WITH THE "GRADING AND DRESSING RULES NO. 16 OF THE WEST COAST LUMBERMAN'S ASSOCIATION."
2. ALL WOOD BEARING ON CONCRETE WITHIN 4'-0" FROM GRADE SHALL BE PRESSURE TREATED DOUGLAS FIR.
3. ALL BOLT HOLES SHALL BE DRILLED 1/32" TO 1/16" OVERSIZED (11.1.2.2, '05 NDS)
4. STRUCTURAL MEMBERS SHALL NOT BE CUT FOR PIPES, ETC. UNLESS SPECIFICALLY NOTED OR DETAILED.
5. PROVIDE 2X SOLID BLOCKING BETWEEN JOISTS OR RAFTERS TO ALL SUPPORTS.
6. PROVIDE SOLID BLOCKING OR CROSS-BRIDGING AT 8'-0" O.C. MAXIMUM FOR ALL FLOOR JOISTS OVER (4") DEEP AND AT 10'0" O.C. MAXIMUM FOR ALL RAFTERS OVER (8") DEEP. LOCATE FIRST BLOCK AT MIDSPAN
7. ALL STRUCTURAL PLYWOOD SHALL BE STRUCTURAL GRADE WITH EXTERIOR GLUE CONFORMING TO PS 1-09.
8. IN HORIZONTAL PLYWOOD SHEATHING, NO PANEL SHALL BE LESS THAN 24 INCHES WIDE. IN VERTICAL PLYWOOD SHEATHING, NO PANEL SHALL BE LESS THAN 12 INCHES WIDE.
9. ALL BOLTS BEARING ON WOOD SHALL HAVE STANDARD CUT WASHERS UNDER HEAD AND NUT, UNLESS NOTED OTHERWISE.
10. ALL JOIST HANGERS SHALL BE "SIMPSON" OR APPROVED EQUAL. AND SHALL MATCH SUPPORTED MEMBER SIZE UNLESS OTHERWISE SHOWN ON DRAWINGS. THEY SHALL BE INSTALLED FOR MAXIMUM RATED LOADS.
11. PROVIDE 2X FIRE STOPS AT ALL INTERSECTIONS OF STUD WALLS AND/OR STUD PARTITIONS AT FLOOR, CEILING AND ROOF. FIRE STOPS AT A MAXIMUM SPACING OF 8'0" O.C. IN THE VERTICAL DIRECTION, PROVIDE 2X FIRE STOPS IN ALL FURRED SPACES, VERTICAL AND HORIZONTAL.
12. ALL STRUCTURAL LUMBER SHALL BE DOUGLAS FIR OF THE FOLLOWING GRADES UNLESS OTHERWISE NOTED:
    STUD, PLATES AND BLOCKING....................NO. 1
    BEAMS AND STRINGERS....................DENSE NO. 1
    POSTS AND MULLIONS....................SEL STRUCT
    JOISTS AND RAFTERS (2X6 AND LARGER)....................NO. 1
    (2X4 AND 3X4)....................NO. 1
    BEAMS (LESS THAN 4" IN WIDTH)....................NO. 1
    PLANK AND DECKING....................SEL COM
    SILL PLATES....................PRESSURE TREATED NO.1 OR BETTER
13. NAILING FOR 5/8" AND 3/4" PLYWOOD SHALL BE 10d PLYWOOD NAILS, 2-1/2" X #9 GAGE X 9/32" DIAMETER HEAD BARBED SHANK, EQUIVALENT.
14. MACHINE APPLIED NAILING: USE OF MACHINE NAILING IS SUBJECT TO A SATISFACTORY JOBSITE DEMONSTRATION FOR EACH PROJECT AND THE APPROVAL BY THE PROJECT ARCHITECT OR STRUCTURAL ENGINEER AND THE DIVISION OF THE STATE ARCHITECT. THE APPROVAL IS SUBJECT TO CONTINUED SATISFACTORY PERFORMANCE. MACHINE NAILING WILL NOT BE APPROVED IN 5/16" PLYWOOD. IF NAILHEADS PENETRATE THE OUTER PLY MORE THAN WOULD BE NORMAL FOR A HAND HAMMER OR IF MINIMUM ALLOWABLE EDGE DISTANCES ARE NOT MAINTAINED, THE PERFORMANCE WILL BE DEEMED UNSATISFACTORY.
15. ALL NAILS SHALL BE COMMON WIRE NAILS.
16. ALL NAILING SHALL COMPLY WITH TABLE 2304.9.1 OF THE 2013 EDITION OF THE C.B.C.
17. ALL LUMBER SHALL HAVE A MAXIMUM MOISTURE CONTENT OF 19 % (DRY) LUMBER
18. WHERE JOISTS ARE SUPPORTING MECHANICAL EQUIPMENT AND ARCHITECTURAL FEATURES, CONSULT MECHANICAL AND ARCHITECTURAL DRAWINGS FOR EQUIPMENT AND FEATURE LOADS.
19. PREDRILL HOLES AS NEEDED FOR ANY SIZE NAIL TO AVOID SPLITTING WOOD FRAMING MEMBERS.
20. NO SHOT PIN IS ALLOWED AT CURBS & EDGE OF SLABS
21. RETIGHTEN BOLTS BEFORE CLOSING-IN
22. EXTERIOR USE NAILS SHOULD BE CORROSIVE RESISTANCE

GENERAL

1. THE GENERAL CONTRACTOR SHALL VERIFY ALL DIMENSIONS AND SITE CONDITIONS BEFORE STARTING WORK. THE ARCHITECT SHALL BE NOTIFIED OF ANY DISCREPANCY BEFORE PROCEEDING WITH THE WORK.
2. DIMENSIONS SHALL TAKE PRECEDENCE OVER SCALES SHOWN ON DRAWINGS.
3. ALL WORK SHALL CONFORM TO THE MINIMUM STANDARDS OF THE 2013 EDITION OF THE CALIFORNIA BUILDING CODE AND TITLE 24 OF THE CALIFORNIA CODE OF REGULATIONS AND ANY OTHER REGULATIONS OVER ANY PORTION OF THE WORK, INCLUDING THE OCCUPATIONAL SAFETY AND HEALTH ADMINISTRATION, AND THOSE LISTED IN THESE NOTES AND SPECIFICATIONS.
4. SEE ARCHITECTURAL, ELECTRICAL, AND MECHANICAL DRAWINGS FOR PITS, TRENCHES, OPENINGS, DEPRESSIONS, ETC., NOT SHOWN ON THE STRUCTURAL DRAWINGS.
5. THE CONTRACT STRUCTURAL DRAWINGS AND SPECIFICATIONS REPRESENT THE FINISHED STRUCTURE. THEY DO NOT INDICATE THE METHOD OF CONSTRUCTION. THE CONTRACTOR SHALL PROVIDE ALL MEASURES NECESSARY TO PROTECT THE STRUCTURE DURING CONSTRUCTION. SUCH MEASURES SHALL INCLUDE, BUT NOT BE LIMITED TO BRACING, SHORING FOR LOADS DUE TO CONSTRUCTION EQUIPMENT, ETC. OBSERVATION VISITS TO THE SITE BY THE STRUCTURAL ENGINEER SHALL NOT INCLUDE THE INSPECTION OF THE ABOVE ITEMS.
6. CONTRACTOR SHALL INVESTIGATE SITE DURING CLEARING AND EARTHWORK OPERATIONS FOR FILLED EXCAVATIONS OR BURIED STRUCTURES SUCH AS CESSPOOLS, CISTERNS, FOUNDATIONS, ETC. IF ANY SUCH STRUCTURES ARE FOUND, STRUCTURAL AND GEOTECHNICAL ENGINEER SHALL BE NOTIFIED IMMEDIATELY.
7. CONSTRUCTION MATERIALS SHALL BE SPREAD OUT IF PLACED ON FRAMED FLOORS OR ROOF. LOAD SHALL NOT EXCEED THE DESIGN LIVE LOAD PER SQUARE FOOT. PROVIDE ADEQUATE SHORING AND OR BRACING WHERE STRUCTURE HAS NOT ATTAINED DESIGN STRENGTH.
8. DESIGN LOADS:

   WIND DESIGN CRITERIA:
   WIND SPEED.....Vult =110 mph (3S GUST)
   EXPOSURE C
   RISK CATEGORY : II
   GCpi + 0.18

   SEISMIC DESIGN:
   RISK CATEGORY = II
   Ie=1.00
   S_s=1.675, S_1=0.615
   SITE CLASS D
   S_{DS}=1.116, S_{D1}=0.615
   S_{MS}=1.675, S_{M1}= 0.923
   SEISMIC DESIGN CATEGORY= D
   ANALYSIS PROCEDURE = EQUIVALENT LATERAL FORCE PROCEDURE

CONCRETE

1. ALL CONCRETE SHALL CONFORM TO 2013 CBC, PART II (CCR).
2. CEMENT SHALL CONFORM TO A.S.T.M. (C-150) TYPE II/V.
3. ANCHOR BOLTS, DOWELS, INSERTS, ETC. SHALL BE SECURELY TIED IN PLACE PRIOR TO POURING CONCRETE.
4. CONCRETE SHALL BE CURED BY KEEPING CONTINUOUSLY WET FOR 10 DAYS OR BY AN APPROVED CURING COMPOUND.
5. REFER TO ARCHITECTURAL, MECHANICAL, ELECTRICAL AND PLUMBING DRAWINGS FOR MISCELLANEOUS ITEMS TO BE CAST INTO CONCRETE AND FOR FLOOR DEPRESSIONS, PITS, ETC.
6. MINIMUM CONCRETE COMPRESSIVE STRENGTHS AT 28 DAYS (MAX WATER/CEMENT RATIO = .45) WITH SLUMP =4" SHALL BE AS FOLLOWS:
   FOUNDATION....................3000 PSI (STONE)
   SLABS ON GRADE....................3000 PSI (STONE)
7. SLABS ON GRADE SHALL BE REINFORCED WITH #3 @ 16" O.C. EACH WAY UNLESS SPECIFICALLY NOTED.
8. ALL CONCRETE SHALL BE NORMAL WEIGHT CONCRETE EXCEPT AS NOTED.
9. CONCRETE PROPORTIONING SHALL BE BASED ON ACI 318-11 SECTION 5.3
10. 15% MAXIMUM FLY ASH MAY BE USE IN THE NORMAL WIEGHT CONCRETE MIX DESIGN. FLY ASH SHALL CONFORM TO ASTM C618 FOR CLASS N OR F.
11. ALL HEADED ANCHOR BOLTS SHALL CONFORM TO A.S.T.M. F1554 GR 36 OR A449 SPECIFICATION. ALL-THREAD RODS IN FOUNDATION SHALL CONFORM TO A.S.T.M. A36 SPECIFICATION.

REINFORCING STEEL

1. BAR REINFORCING SHALL CONFORM TO ASTM A-615 GRADE 60 DEFORMED FOR NO. 5 AND LARGER; NO. 4 AND SMALLER SHALL CONFORM TO GRADE 40.
2. WELDED WIRE FABRIC SHALL CONFORM TO ASTM A-185, FLAT SHEETS. KEEP REINFORCING AT MID-DEPTH OF SLAB-ON-GRADE.
3. DETAILS OF REINFORCEMENT SHALL BE IN ACCORDANCE WITH CHAPTER 7 OF AMERICAN CONCRETE INSTITUTE 315 UNLESS NOTED ON THIS DRAWING OR PER TITLE 24 CCR PART 2.
4. LAP BARS IN CONCRETE CONSTRUCTION SHALL BE IN ACCORDANCE WITH THE SCHEDULE GIVEN IN SHEET S1.0
5. LAPS OF WELDED FABRIC AT SPLICES SHALL NOT BE LESS THAN 8 INCHES.
6. REINFORCING STEEL DETAILING, BENDING AND PLACING SHALL BE IN ACCORDANCE WITH THE CONCRETE REINFORCING STEEL INSTITUTE "MANUAL OF STANDARD PRACTICE", LATEST EDITION.
7. ALL REINFORCING STEEL, ANCHOR BOLTS, DOWELS SHALL BE SECURELY TIED IN PLACE BEFORE PLACING CONCRETE.
8. SUBMIT REINFORCING SHOP DRAWINGS FOR REVIEW BY THE ARCHITECT BEFORE FABRICATION.
9. PROVIDE THE FOLLOWING MINIMUM CLEAR COVER OF CONCRETE OVER REINFORCING STEEL UNLESS OTHERWISE NOTED ON PLAN:

   ON EARTH SIDE WHEN PLACED AGAINST EARTH..........3"
   ON EARTH SIDE WHEN FORMED....................2"
   EXTERIOR WALL STEEL ABOVE GRADE....................2" (1 1/2" FOR #5 & SMALLER)
   INTERIOR WALL STEEL AND SUPPORTED SLABS..........3/4"
   TIED COLUMNS (STIRRUPS) ABOVE GRADE....................1-1/2"
   BEAMS (STIRRUPS) ABOVE GRADE....................1-1/2"
   WELDED WIRE FABRIC....................CENTER LINE OF SLAB

EXPANSION ANCHORS

EXPANSION ANCHOR SHALL BE OF TYPE HILTI KWIK BOLT TZ (ESR-1917)

TEST VALUES FOR HARDROCK OR LIGHTWEIGHT CONCRETE	
ANCHOR DIAM.	WEDGE ANCHOR TORQUE VALUE
inches	ft-lbs
3/8"Ø	25
1/2"Ø	40
5/8"Ø	60
3/4"Ø	110

NOTES

1. TEST INSTALLED ANCHORS PER SECTION 1916A.7
2. THE FOLLOWING CRITERIA APPLY FOR THE ACCEPTANCE OF INSTALLED ANCHORS:

A. TORQUE WRENCH METHOD: THE APPLICABLE TEST TORQUE MUST BE REACHED WITHIN THE FOLLOWING LIMITS:

I. WEDGE OR SLEEVE TYPE: ONE-HALF (1/2) TURN OF THE NUT.

II. ONE-QUARTER (1/4) TURN OF THE NUT FOR THE 3/8 IN. SLEEVE ANCHOR ONLY.

3. IF THE MANUFACTURER'S RECOMMENDED INSTALLATION TORQUE IS LESS THAN THE TEST TORQUE NOTED IN THE TABLE, THE MANUFACTURER'S RECOMMENDED INSTALLATION TORQUE SHOULD BE USED IN LIEU OF THE TABULATED VALUES.

WLC ARCHITECTS
CLIENT FOCUSED • PASSION DRIVEN
SOUTHERN CALIFORNIA
8163 ROCHESTER AVENUE, SUITE 100
RANCHO CUCAMONGA
CALIFORNIA 91730-0729
TEL: 909-987-0909
www.wlcarchitects.com

LONGFELOW ELEMENTARY SCHOOL HVAC REPLACEMENT

COMTON UNIFIED SCHOOL DISTRICT
1101 STANFORD AVE.
COMPTON, CA. 90220

LICENSED ARCHITECT MARK GRAHAM C-26046 03-31-19 STATE OF CALIFORNIA
REGISTERED PROFESSIONAL ENGINEER PETER TRAN No. 4628 Exp. 6-30-19 STRUCTURAL STATE OF CALIFORNIA

CONSULTANT
K.B. LEUNG & ASSOCIATES
STRUCTURAL ENGINEERS
9320 BASELINE ROAD, SUITE D
ALTA LOMA, CA 91701
(909) 944 - 0029 PHONE
(909) 944 - 7983 FAX

IDENTIFICATION STAMP
DIV. OF THE STATE ARCHITECT
OFFICE OF REGULATION SERVICES
APPL 03-118423
AC — FLS ✓ SS EY
DATE MAR 0 6 2018
FILE: 19-23

NO	DATE	BY	DESCRIPTION
#	REVISIONS		

DRAWN: IDK	CHECKED: PT
DATE: 10/20/17	SCALE: AS NOTED
PROJECT NUMBER: 1723400	

GENERAL NOTES & DETAILS

DRAWING NUMBER: S1.0

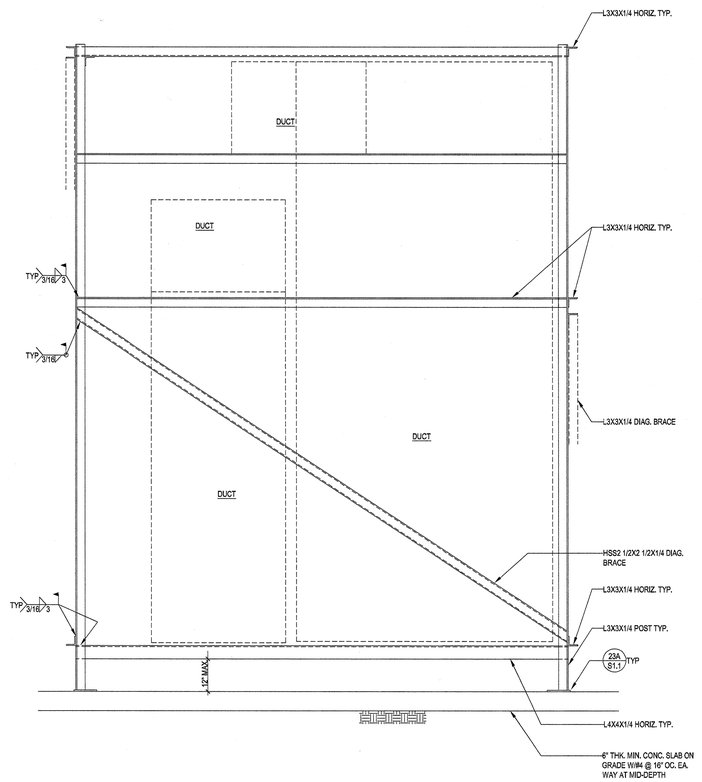

3/4"=1'-0" 8

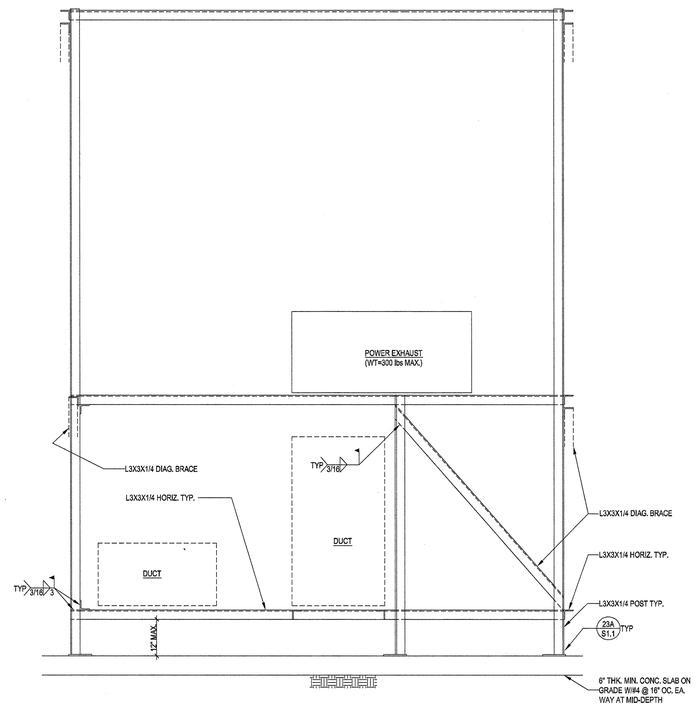

3/4"=1'-0" 10

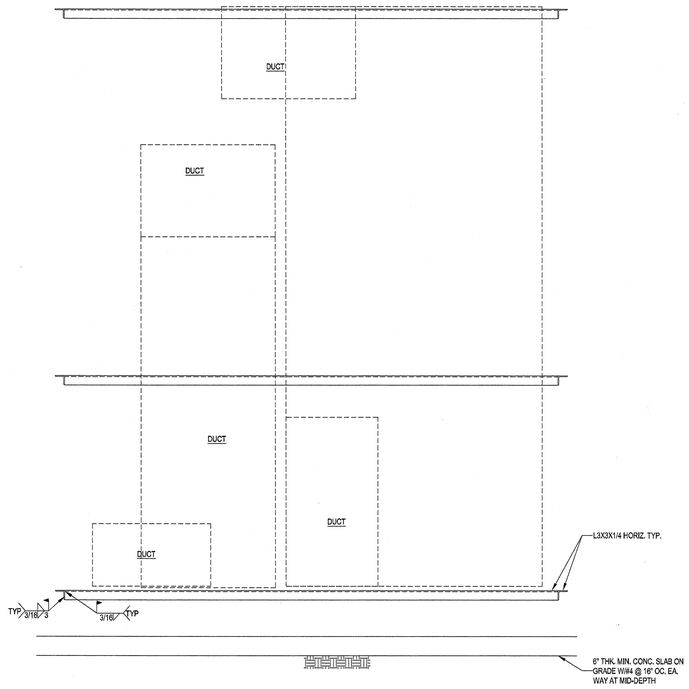

3/4"=1'-0" 12

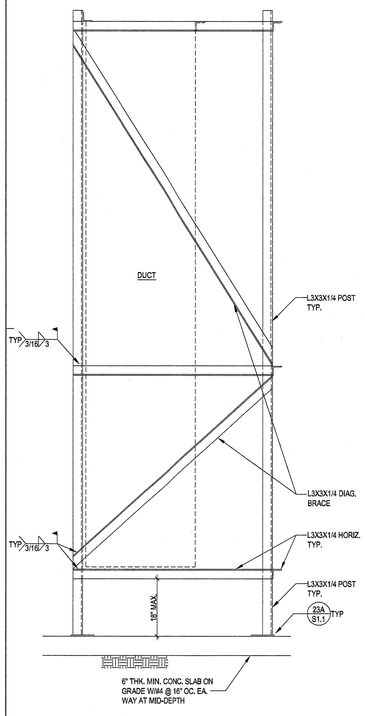

3/4"=1'-0" 19

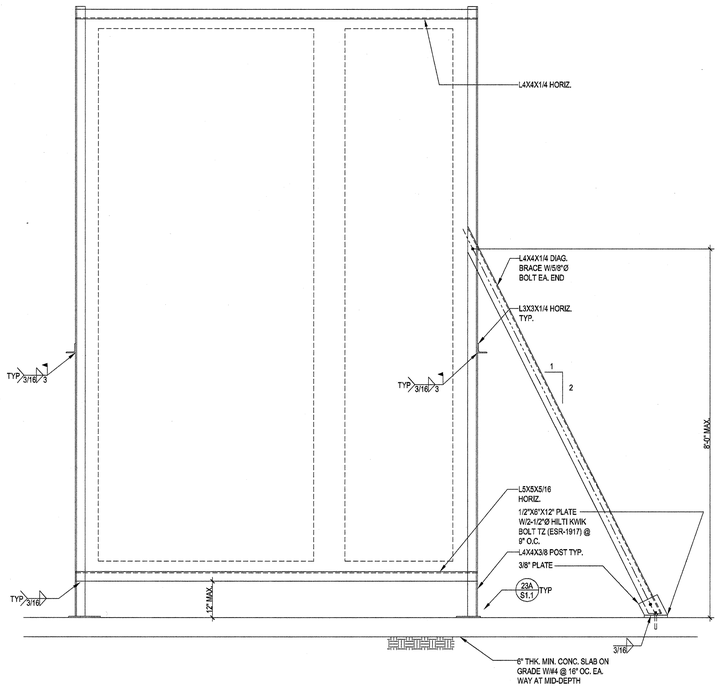

3/4"=1'-0" 21

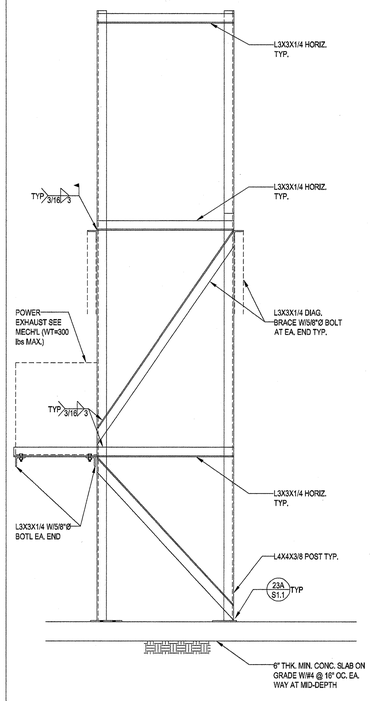

3/4"=1'-0" 22

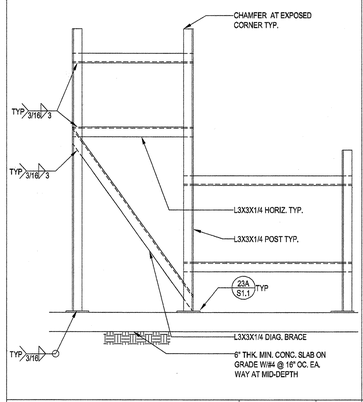

3/4"=1'-0" 17

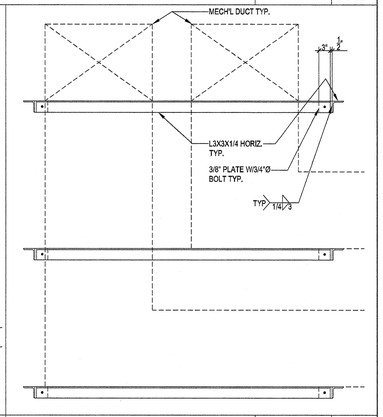

3/4"=1'-0" 18

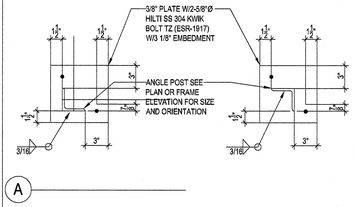

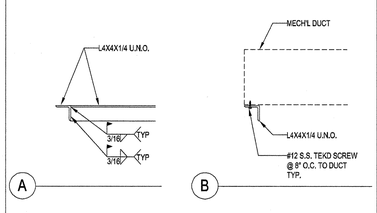

3/4"=1'-0" 23

3/4"=1'-0" 24

ARCHITECTS
WLC
CLIENT FOCUSED • PASSION DRIVEN

SOUTHERN CALIFORNIA
8163 ROCHESTER AVENUE, SUITE 100
RANCHO CUCAMONGA
CALIFORNIA 91730-0729

TEL: 909-987-0909

www.wlcarchitects.com

LONGFELLOW ELEMENTARY SCHOOL HVAC REPLACEMENT

COMTON UNIFIED SCHOOL
1101 BISSELL AVE.
COMPTON, CA. 90220

LICENSED ARCHITECT
MARK GRAHAM
C-26046
03-31-19
STATE OF CALIFORNIA

REGISTERED PROFESSIONAL ENGINEER
PETER TRAN
No. 4628
Exp. 6-30-19
STRUCTURAL
STATE OF CALIFORNIA

CONSULTANT
K.B. LEUNG & ASSOCIATES
STRUCTURAL ENGINEERS
9320 BASELINE ROAD, SUITE D
ALTA LOMA, CA. 91701
(909) 944 - 0029 PHONE
(909) 944 - 7883 FAX

IDENTIFICATION STAMP
DIV. OF THE STATE ARCHITECT
OFFICE OF REGULATION SERVICES
APPL 03-118423
AC. — FLS — SS EY
DATE MAR 0 8 2018
FILE: 19-23

NO	DATE	BY	DESCRIPTION
			REVISIONS

DRAWN: IDK	CHECKED: PT
DATE: 10/20/17	SCALE: AS NOTED
PROJECT NUMBER: 1723400	

DETAILS

DRAWING NUMBER: S1.1

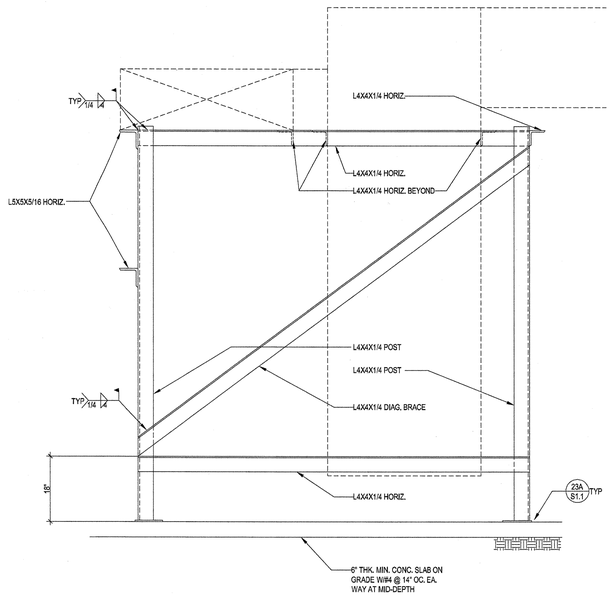

3/4"=1'-0" 8

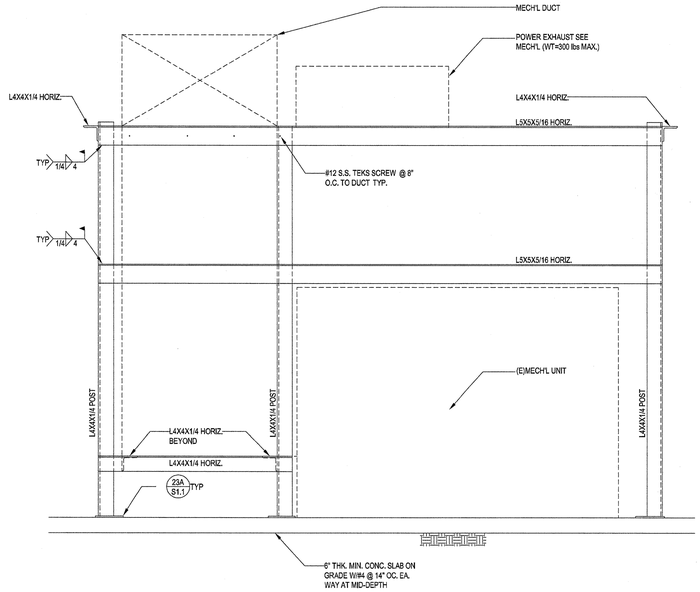

3/4"=1'-0" 10

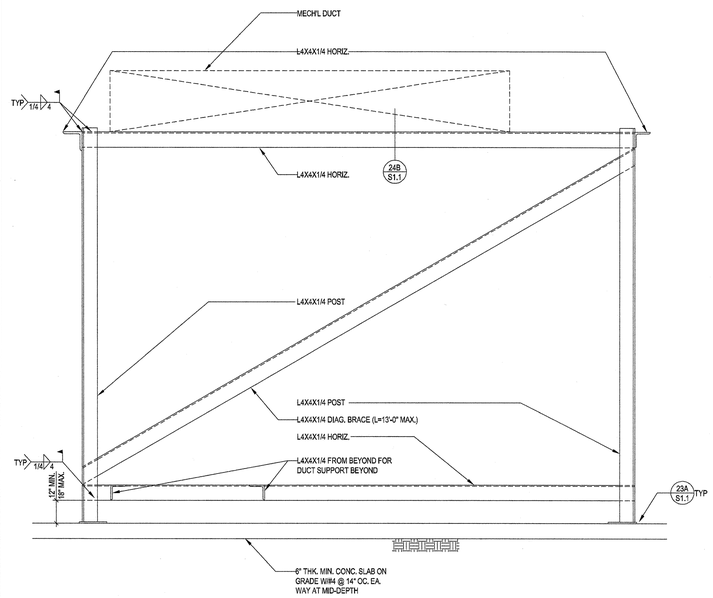

3/4"=1'-0" 12

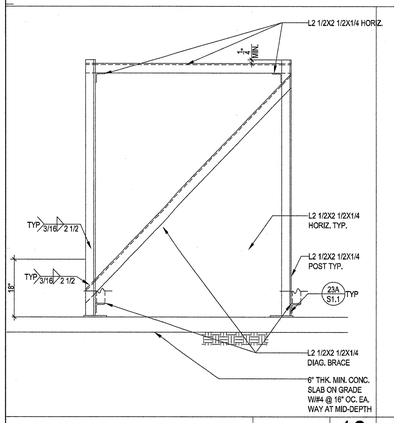

3/4"=1'-0" 13

3/4"=1'-0" 17

3/4"=1'-0" 18

3/4"=1'-0" 21

3/4"=1'-0" 19

3/4"=1'-0" 21

3/4"=1'-0" 22

3/4"=1'-0" 23

3/4"=1'-0" 24

WLC ARCHITECTS
CLIENT FOCUSED • PASSION DRIVEN

SOUTHERN CALIFORNIA
8163 ROCHESTER AVENUE, SUITE 100
RANCHO CUCAMONGA
CALIFORNIA 91730-0729
TEL: 909-987-0909
www.wlcarchitects.com

LONGFELOW ELEMENTARY SCHOOL HVAC REPLACEMENT

COMTON UNIFIED SCHOOL
1101 DISTRICT AVE.
COMPTON, CA. 90220

LICENSED ARCHITECT MARK GRAHAM C-26046 03-31-19 STATE OF CALIFORNIA

REGISTERED PROFESSIONAL ENGINEER PETER TRAN No. 4628 Exp. 6-30-19 STRUCTURAL STATE OF CALIFORNIA

CONSULTANT
K.B. LEUNG & ASSOCIATES
STRUCTURAL ENGINEERS
9320 BASELINE ROAD, SUITE D
ALTA LOMA, CA 91701
(909) 944 - 0029 PHONE
(909) 944 - 7983 FAX

IDENTIFICATION STAMP
DIV. OF THE STATE ARCHITECT
OFFICE OF REGULATION SERVICES
APPL 03-118423
AC — FLS — SS EY
DATE MAR 0 6 2018
FILE: 19-23

NO	DATE	BY	DESCRIPTION
#	REVISIONS		

DRAWN: IDK	CHECKED: PT
DATE: 10/20/17	SCALE: AS NOTED
PROJECT NUMBER: 1723400	

DETAILS

DRAWING NUMBER: S1.2

NOTES:

1. ALL DUCT SUPPORTED BY STEEL ANGLE SHALL BE FASTENED BY #12-24 TEKS SCREW (ESR-1976) @ 12" MAX. O.C. FROM STEEL ANGLE INTO DUCT.
2. PROVIDE #12-24 TEKS SCREW (ESR-1967) @ 8" MAX. O.C. TO ALL POWER EXHAUST.

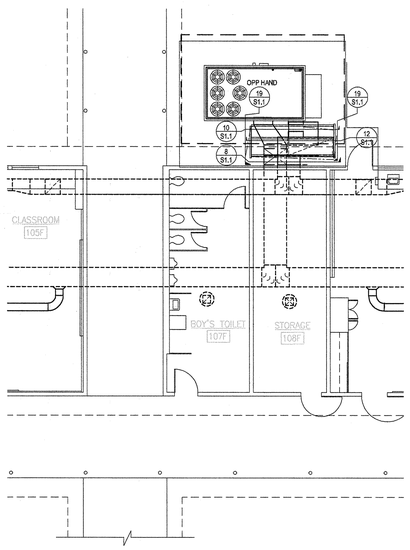

BLD'G C

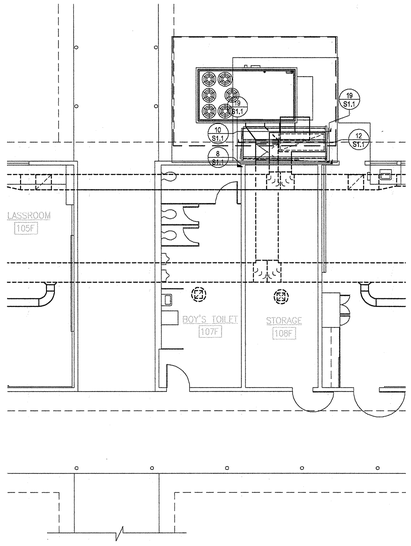

BLD'G F

PARTIAL BUILDING C & F FLOOR PLAN

1/8"=1'-0" | 1

NOTES:

1. ALL DUCT SUPPORTED BY STEEL ANGLE SHALL BE FASTENED BY #12-24 TEKS SCREW (ESR-1976) @ 12" MAX. O.C. FROM STEEL ANGLE INTO DUCT.
2. PROVIDE #12-24 TEKS SCREW (ESR-1967) @ 8" MAX. O.C. TO ALL POWER EXHAUST.

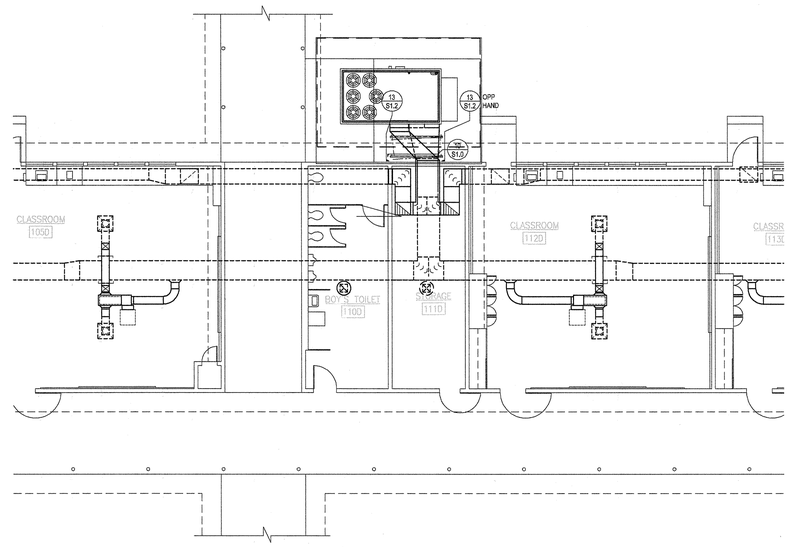

PARTIAL BUILDING D FLOOR PLAN

1/8"=1'-0" | 2

NOTES:

1. ALL DUCT SUPPORTED BY STEEL ANGLE SHALL BE FASTENED BY #12-24 TEKS SCREW (ESR-1976) @ 12" MAX. O.C. FROM STEEL ANGLE INTO DUCT.
2. PROVIDE #12-24 TEKS SCREW (ESR-1967) @ 8" MAX. O.C. TO ALL POWER EXHAUST.

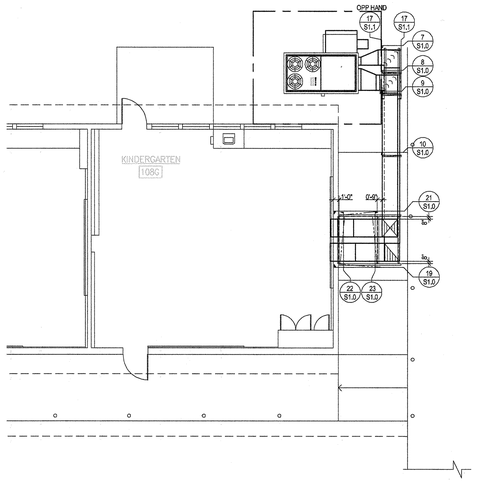

PARTIAL BUILDING G FLOOR PLAN

1/8"=1'-0" | 3

NOTES:

1. ALL DUCT SUPPORTED BY STEEL ANGLE SHALL BE FASTENED BY #12-24 TEKS SCREW (ESR-1976) @ 12" MAX. O.C. FROM STEEL ANGLE INTO DUCT.
2. PROVIDE #12-24 TEKS SCREW (ESR-1967) @ 8" MAX. O.C. TO ALL POWER EXHAUST.

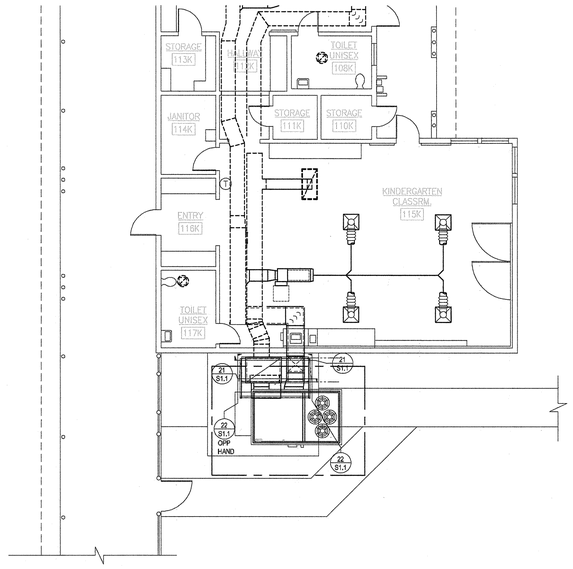

PARTIAL BUILDING K FLOOR PLAN

1/8"=1'-0" | 4

NOTES:

1. ALL DUCT SUPPORTED BY STEEL ANGLE SHALL BE FASTENED BY #12-24 TEKS SCREW (ESR-1976) @ 12" MAX. O.C. FROM STEEL ANGLE INTO DUCT.
2. PROVIDE #12-24 TEKS SCREW (ESR-1967) @ 8" MAX. O.C. TO ALL POWER EXHAUST.

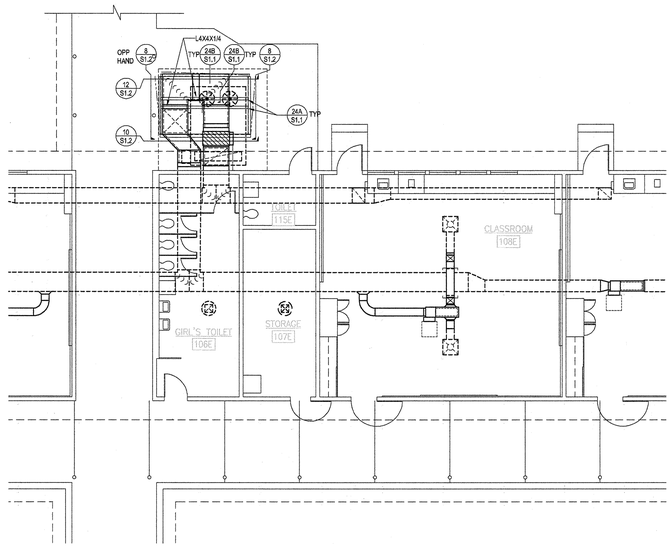

PARTIAL BUILDING E FLOOR PLAN

1/8"=1'-0" | 5

ARCHITECTS
WLC
CLIENT FOCUSED • PASSION DRIVEN

SOUTHERN CALIFORNIA
8163 ROCHESTER AVENUE, SUITE 100
RANCHO CUCAMONGA
CALIFORNIA 91730-0729

TEL: 909-987-0909

www.wlcarchitects.com

LONGFELOW ELEMENTARY SCHOOL HVAC REPLACEMENT

COMTON UNIFIED SCHOOL DISTRICT
1101 BULLIS AVE.
COMPTON, CA. 90220

LICENSED ARCHITECT
MARK GRAHAM
C-26046
03-31-19
STATE OF CALIFORNIA

REGISTERED PROFESSIONAL ENGINEER
PETER TRAN
No. 4628
Exp. 6-30-19
STRUCTURAL
STATE OF CALIFORNIA

CONSULTANT
K.B. LEUNG & ASSOCIATES
STRUCTURAL ENGINEERS
9330 BASELINE ROAD, SUITE D
ALTA LOMA, CA 91701
(909) 944 - 0029 PHONE
(909) 944 - 7983 FAX

IDENTIFICATION STAMP
DIV. OF THE STATE ARCHITECT
OFFICE OF REGULATION SERVICES
APPL 03-118423
AC ___ FLS ___ SS BY
DATE AUG 0 6 2018

FILE: 19-23

NO	DATE	BY	DESCRIPTION
1			REVISIONS

DRAWN: IDK	CHECKED: PT
DATE: 10/20/17	SCALE: AS NOTED
PROJECT NUMBER: 1723400	

BLD'G C, D, F, G, K
PARTIAL FLOOR PLAN

DRAWING NUMBER: S2.1

GENERAL NOTES

----- GENERAL NOTES -----

1. ENTIRE INSTALLATION SHALL CONFORM TO THE REQUIREMENTS OF THE 2016 CALIFORNIA MECHANICAL CODE, 2016 CALIFORNIA BUILDING CODE, AND ALL OTHER APPLICABLE CODES AND REGULATIONS, INCLUDING 2016 BUILDING ENERGY EFFICIENCY STANDARDS DIVISION T-24.

2. 2016 CALIFORNIA GREEN BUILDING STANDARDS (CALGREEN) CODE INCLUDING THE APPLICABLE MANDATORY MEASURES:

   - 5.201.1 CALIFORNIA ENERGY CODE. FOR THE PURPOSES OF MANDATORY ENERGY EFFICIENCY STANDARDS IN THIS CODE, THE CALIFORNIA ENERGY COMMISSION WILL CONTINUE TO ADOPT MANDATORY STANDARDS.
   - 5.504.3: COVERING OF DUCT OPENINGS AND PROTECTION OF MECHANICAL EQUIPMENT DURING CONSTRUCTION. AT THE TIME OF ROUGH INSTALLATION AND DURING STORAGE ON THE CONSTRUCTION SITE UNTIL FINAL STARTUP OF THE HEATING, COOLING AND VENTILATING EQUIPMENT, ALL DUCT AND OTHER RELATED AIR DISTRIBUTION COMPONENT OPENINGS SHALL BE COVERED WITH TAPE, PLASTIC, SHEET METAL OR OTHER METHODS ACCEPTABLE TO THE ENFORCING AGENCY TO REDUCE THE AMOUNT OF DUST, WATER AND DEBRIS WHICH MAY ENTER THE SYSTEM.
   - 5.504.5.3.1 FILTERS. IN MECHANICALLY VENTILATED BUILDINGS, PROVIDE REGULARLY OCCUPIED AREAS OF THE BUILDING WITH AIR FILTRATION MEDIA FOR OUTSIDE AND RETURN AIR PRIOR TO OCCUPANCY THAT PROVIDES AT LEAST A MINIMUM EFFICIENCY REPORTING VALUE (MERV) OF 8. MERV 8 FILTERS SHALL BE INSTALLED PRIOR TO OCCUPANCY AND RECOMMENDATIONS FOR MAINTENANCE WITH FILTERS OF THE SAME VALUE SHALL BE INCLUDED IN THE OPERATION AND MAINTENANCE MANUAL. EXCEPTIONS:
     - a. AN ASHRAE 10-PERCENT TO 30-PERCENT EFFICIENCY FILTER SHALL BE PERMITTED FOR AN HVAC UNIT MEETING THE 2016 CALIFORNIA ENERGY CODE HAVING 60,000 BTU/H OR LESS CAPACITY PER FAN COIL, IF THE ENERGY USE OF THE AIR DELIVERY SYSTEM IS 0.4 W/CFM OR LESS AT THE DESIGN AIR FLOW.
     - b. EXISTING MECHANICAL EQUIPMENT.
   - 5.506.1 OUTSIDE AIR DELIVERY. FOR MECHANICALLY OR NATURALLY VENTILATED SPACES IN BUILDINGS, MEET THE MINIMUM REQUIREMENTS OF SECTION 121 (REQUIREMENTS FOR VENTILATION) OF THE 2016 CALIFORNIA ENERGY CODE, OR THE APPLICABLE LOCAL CODE, WHICHEVER IS MORE STRINGENT, AND DIVISION 1, CHAPTER 4 OF CCR, TITLE 8.
   - 5.508.1 OZONE DEPLETION AND GREENHOUSE GAS REDUCTIONS. INSTALL HVAC AND REFRIGERATION AND FIRE SUPPRESSION EQUIPMENT SHALL COMPLY WITH 5.508.1.1 AND 5.508.1.2.
   - 5.508.1.1 CHLOROFLUOROCARBONS (CFCS). INSTALL HVAC, REFRIGERATION AND FIRE SUPPRESSION EQUIPMENT THAT DO NOT CONTAIN CFCS.
   - 5.508.1.2 HALONS. INSTALL HVAC, REFRIGERATION AND FIRE SUPPRESSION EQUIPMENT THAT DO NOT CONTAIN HALONS.
   - ADHESIVES, SEALANTS AND CAULKS SHALL MEET CALGREEN REQUIREMENTS.
   - INSTALLER AND SPECIAL INSPECTORS SHALL MEET ALL QUALIFICATIONS LISTED IN SECTION 702 OF THE 2016 CALIFORNIA GREEN BUILDING STANDARDS CODE.

3. COORDINATE ENTIRE INSTALLATION OF THE HVAC SYSTEM WITH THE WORK OF ALL OTHER TRADES PRIOR TO ANY FABRICATION OR INSTALLATION. PROVIDE ALL FITTINGS, OFFSETS, AND TRANSITIONS AS REQUIRED FOR A COMPLETE WORKABLE INSTALLATION. THE MECHANICAL CONTRACTOR SHALL BE RESPONSIBLE TO COORDINATE ITEMS TO BE PROVIDED BY OTHER TRADES WHERE MENTIONED IN THE CONTRACT DOCUMENTS PRIOR TO BID – NO EXCEPTIONS.
4. COORDINATE THE LOCATIONS OF ALL CEILING DIFFUSERS, REGISTERS, AND GRILLES WITH THE ARCHITECTURAL REFLECTIVE CEILING PLAN, ELECTRICAL LIGHTING LAYOUT AND ARCHITECTURAL ROOM ELEVATIONS. THE ARCHITECT AND ENGINEER SHALL BE IMMEDIATELY NOTIFIED OF ANY CONFLICTS PRIOR TO FABRICATION AND INSTALLATION.
5. CONTRACTOR SHALL NOTIFY OWNER AND ENGINEER OF CONSTRUCTION PHASING PRIOR TO START OF CONSTRUCTION, REMOVAL, AND/OR REPLACEMENT OF ANY EQUIPMENT. CONTRACTOR SHALL RECEIVE PERMISSION IN WRITING PRIOR TO THE START OF ANY WORK DURING ANY PHASE FOR WORK SHOWN HEREIN. IT SHALL BE THE RESPONSIBILITY OF THE CONTRACTOR TO CONDUCT WORK AND ARRANGE HIS WORK IN A MANNER THAT WILL CAUSE MINIMAL INTERFERENCE WITH DAILY FUNCTIONS WITHIN THE FACILITY. ANY EXPECTED DOWNTIME SHALL BE COORDINATED WITH THE OWNER.
6. ALL EQUIPMENT, DUCTS, PIPING, AND OTHER DEVICES AND MATERIALS INSTALLED OUTSIDE OF THE BUILDING OR OTHERWISE EXPOSED TO THE WEATHER SHALL BE COMPLETELY WEATHER-PROOFED AND PAINTED TO MATCH, COORDINATE WITH ARCHITECT PRIOR TO PAINTING.
7. THE OWNER ACKNOWLEDGES THAT THE DESIGN PROFESSIONAL'S PLANS ARE INSTRUMENTS OF PROFESSIONAL SERVICE. NEVERTHELESS, THE PLANS PREPARED UNDER THIS AGREEMENT SHALL BECOME THE PROPERTY OF THE OWNER UPON COMPLETION OF THE WORK. THE OWNER AGREES TO HOLD HARMLESS AND INDEMNIFY THE DESIGN PROFESSIONAL AGAINST ALL DAMAGES, CLAIMS AND LOSSES, INCLUDING DEFENSE COSTS, ARISING OUT OF ANY RESCUE OF THE PLANS WITHOUT THE WRITTEN AUTHORIZATION OF THE DESIGN PROFESSIONAL.
8. ALL DIMENSIONS SHOWN ON THESE PLANS ARE APPROXIMATE AND MUST BE CONFIRMED ON SITE.
9. PRIOR TO OCCUPANCY, THE ENTIRE H.V.A.C. SYSTEMS SHALL BE BALANCED IN ACCORDANCE WITH (AABC) ASSOCIATED AIR BALANCE COUNCIL STANDARDS BY AN INDEPENDENT AIR BALANCE CONTRACTOR. CERTIFICATION SHALL BE PROVIDED BY THE CONTRACTOR FOR AIR AND HYDRONIC AS APPLICABLE. SYSTEMS SHALL BE BALANCED AS INDICATED ON PLANS INCLUDING FRESH AIR VENTILATION. WHERE THERE IS A CONFLICT WITH THE MECHANICAL PLANS, THE AIR BALANCE CONTRACTOR SHALL NOTIFY THE ENGINEER PRIOR TO BALANCING OF SYSTEM. IF NOT THE AIR BALANCE CONTRACTOR SHALL BEAR ALL COSTS INCURRED FOR WORK THAT MUST BE RE-BALANCED DUE TO CONFLICTS ON CONTRACT DOCUMENTS. CONTRACTOR SHALL PROVIDE THREE COPIES OF THE AIR BALANCE REPORT TO THE ENGINEER FOR APPROVAL.
10. FOR INACCESSIBLE AREAS THE CONTRACTOR SHALL PROVIDE ACCESS PANELS FOR ALL DAMPERS, EQUIPMENT, SMOKE DETECTORS, AND CONTROL DEVICES. THESE PANELS SHALL MATCH THE RATING OF THE WALL AND/OR CEILING THAT THEY ARE LOCATED IN. MINIMUM ACCESS PANEL SIZES SHALL BE AS FOLLOWS:

    1) HAND ACCESS: 12"x12"

    2) BODY ACCESS: 30"x30" MIN. WHERE A LARGER ACCESS SIZE IS REQUIRED DUE TO INSTALLATION CONSTRAINTS, THE CONTRACTOR SHALL DO SO AT NO ADDITIONAL COST AND SHALL NOTIFY THE ARCHITECT AND ENGINEER OF DEVIATIONS PRIOR TO INSTALLATION.
11. COORDINATE THE LOCATION OF ALL ROOF OPENINGS AND THE LOCATION OF ALL ROOF MOUNTED EQUIPMENT WITH THE STRUCTURAL AND ARCHITECTURAL PLANS PRIOR TO ANY INSTALLATION.
12. PLATFORMS, CURBS, AND FLASHINGS FOR MECHANICAL EQUIPMENT SHALL BE AS INDICATED ON THE STRUCTURAL AND ARCHITECTURAL PLANS, UNLESS NOTED OTHERWISE. WHERE THERE IS A CONFLICT WITH THE MECHANICAL PLANS, THE CONTRACTOR SHALL NOTIFY THE ARCHITECT AND ENGINEER PRIOR TO FABRICATION AND INSTALLATION.
13. ALL EQUIPMENT, ACCESSORIES, AND RELATED PIPING SHALL BE INSTALLED IN STRICT ACCORDANCE WITH THE EQUIPMENT MANUFACTURER'S RECOMMENDATIONS. PROVIDE ALL FITTINGS, TRANSITIONS, DAMPERS, VALVES, AND OTHER DEVICES REQUIRED FOR A COMPLETE WORKABLE INSTALLATION.
14. MAINTENANCE LABEL SHALL BE AFFIXED TO ALL MECHANICAL EQUIPMENT AND A MAINTENANCE MANUAL SHALL BE PROVIDED FOR THE OWNER'S USE.
15. PROVIDE MERV 13 EFFICIENCY THROWAWAY FILTERS FOR ALL AIR CONDITIONING UNITS. SEE EQUIPMENT SCHEDULE AND SPECIFICATIONS FOR TYPE. SIZES SHALL BE AS RECOMMENDED BY THE MANUFACTURER, UNLESS OTHERWISE SPECIFIED.
16. AIR FILTERS SHALL BE STATE FIRE MARSHALL APPROVED AND LISTED. PREFORMED FILTERS HAVING COMBUSTIBLE FRAMING SHALL BE TESTED AS A COMPLETE ASSEMBLY. AIR FILTERS SHALL BE ACCESSIBLE FOR CLEANING OR REPLACEMENT.
17. ALL EQUIPMENT WITH MOVING PARTS SHALL BE PROVIDED WITH FLEXIBLE DUCT AND PIPE CONNECTIONS.
18. ALL EQUIPMENT SHALL BE LABELED AS TO THE SPACE IT SERVES.
19. ALL HVAC EQUIPMENT SHALL BE CERTIFIED BY THE CALIFORNIA ENERGY COMMISSION TO COMPLY WITH LATEST EFFICIENCY STANDARDS.
20. PROVIDE MANUAL VOLUME DAMPERS AND BACKDRAFT DAMPERS FOR FRESH AIR INTAKES ON ALL AIR HANDLING EQUIPMENT AND EXHAUST FANS SERVING CONDITIONED SPACES. EXCEPTION: EQUIPMENT WITH FACTORY ECONOMIZERS. DAMPERS SITUATED ON THE ROOF SHALL BE SECURED AFTER BALANCING, TO AVOID THE POSSIBILITY OF ADJUSTMENT.
21. ALL AIR HANDLING EQUIPMENT SERVING CONDITIONED SPACES SHALL PROVIDE CONTINUOUS FRESH AIR TO SPACES IN OCCUPIED MODE.
22. CONTRACTOR SHALL VERIFY ALL CLEARANCES AND AVAILABLE SPACE FOR DUCTWORK PRIOR TO ORDERING AND/OR FABRICATING MATERIAL.
23. CONTRACTOR TO SUBMIT ALL EQUIPMENT, DUCTWORK, AIR DISTRIBUTION DEVICES, AND OTHER ACCESSORIES TO THE ENGINEER FOR APPROVAL PRIOR TO ANY ORDERING OF SUCH ITEMS.
24. CONTRACTOR SHALL BE RESPONSIBLE FOR COMMISSIONING OF EQUIPMENT.
25. PAINT EXPOSED SURFACES, WHETHER OR NOT COLORS ARE DESIGNATED IN SCHEDULES, EXCEPT WHERE A SURFACE OR MATERIAL IS SPECIFICALLY INDICATED NOT TO BE PAINTED OR IS TO REMAIN NATURAL. WHERE AN ITEM OR SURFACE IS NOT SPECIFICALLY MENTIONED, PAINT THE SAME AS SIMILAR ADJACENT MATERIALS OR SURFACES. IF COLOR OR FINISH IS NOT DESIGNATED, THE OWNER'S REPRESENTATIVE WILL SELECT FROM STANDARD COLORS OR FINISHES AVAILABLE.

    1) PAINTING INCLUDES FIELD PAINTING EXPOSED BARE AND COVERED PIPES AND DUCTS (INCLUDING COLOR CODING), HANGERS, EXPOSED STEEL AND IRON WORK, AND PRIMED METAL SURFACES OF MECHANICAL AND ELECTRICAL EQUIPMENT.
26. ALL MECHANICAL PIPING SYSTEMS, DUCTS, CONTROLS, VALVES, APPARATUS, ETC., EXCEPT THOSE THAT ARE INSTALLED IN INACCESSIBLE LOCATIONS IN PARTITIONS, WALLS, AND FLOORS, AND THOSE BURIED UNDERGROUND, SHALL BE PERMANENTLY MARKED AND IDENTIFIED AS INDICATED IN THE RELATED SPECIFICATIONS.
27. UNLESS SPECIFICALLY SHOWN ON THESE PLANS NO STRUCTURAL MEMBER SHALL BE CUT, DRILLED NOR NOTCHED WITHOUT PRIOR WRITTEN AUTHORIZATION FROM THE STRUCTURAL ENGINEER AND THE DISTRICT STRUCTURAL ENGINEER FROM THE DIVISION OF THE STATE ARCHITECT.
28. CONTRACTOR TO BALANCE THE AIRFLOW FOR THE HVAC UNITS AND ALSO CHECK PROPER OPERATION OF THE ECONOMIZER/ POWER EXHAUST TO MAINTAIN 0.02 INCHES MAXIMUM DIFFERENTIAL PRESSURE AT EACH DOOR TO MEET THE ADA REQUIREMENTS FOR DOOR OPENING/CLOSURE OF NO MORE THAN 5 POUNDS. CONTRACTOR TO MAKE NECESSARY ADJUSTMENTS TO MEET THESE REQUIREMENTS

----- CONTROLS -----

1. CONTROL SCHEMATICS ARE FOR SEQUENCE ONLY. REFER TO ELECTRICAL DRAWINGS AND SPECIFICATIONS FOR ALL ELECTRICAL DEVICES REQUIRED.
2. ALL LINE VOLTAGE WIRING SHALL BE INSTALLED IN CONDUIT. ALL LINE VOLTAGE CONDUIT AND WIRING, INCLUDING FINAL CONNECTIONS, SHALL BE FURNISHED AND INSTALLED BY THE ELECTRICAL CONTRACTOR AS INDICATED ON THE ELECTRICAL DRAWINGS OR SPECIFIED IN THE ELECTRICAL SECTION OF THE SPECIFICATIONS. ALL ELECTRICAL WORK SHALL BE INSTALLED IN ACCORDANCE WITH ALL APPLICABLE CODES AND REGULATIONS OF ALL GOVERNING BODIES HAVING JURISDICTION THEREOF.
3. ALL LOW VOLTAGE CONDUIT AND WIRING AS APPLICABLE, INCLUDING FINAL CONNECTIONS, SHALL BE FURNISHED AND INSTALLED BY THE MECHANICAL CONTRACTOR AS INDICATED ON THE MECHANICAL DRAWINGS.

    A1) ALL LOW VOLTAGE WIRING SHALL BE INSTALLED IN CONDUIT.

    A2) ALL LOW VOLTAGE WIRING SHALL BE PLENUM – RATED.

    B) WHERE THE CONTROLS CONTRACTOR IS RETAINED BY THE OWNER, THEY SHALL BE RESPONSIBLE FOR THE FOLLOWING:

    1) FURNISH AND INSTALL ALL DEVICES, WIRING, AND TERMINATIONS REQUIRED FOR A COMPLETE AND FUNCTIONAL INSTALLATION.

    2) COORDINATE ALL WORK AND REQUIREMENTS WITH OTHER TRADES INCLUDING GENERAL, MECHANICAL, AND ELECTRICAL CONTRACTORS PRIOR TO BID.

    3) CONTRACTOR SHALL FOLLOW ALL SUBMITTAL REQUIREMENTS PER DRAWINGS.
4. CONTRACTOR SHALL BE RESPONSIBLE FOR ORDERING AIR CONDITIONING EQUIPMENT WITH THRU-THE-BASE POWER, CONTROL, AND GAS CONNECTIONS. VERIFY ALL CONNECTION LOCATIONS WITH UNIT MANUFACTURER AND COORDINATE WITH OTHER TRADES AS NECESSARY.
5. ELECTRICAL CONTRACTOR SHALL PROVIDE REQUIRED RELAY ACCESSORIES FOR CONNECTION OF 120 VOLT 1 PHASE VENTILATION EQUIPMENT TO 277 VOLT 1 PHASE LIGHTING AS APPLICABLE.
6. ALL THERMOSTATS SHALL HAVE LOCKABLE COVERS (WHERE INDICATED ON PLANS) AND SHALL BE OF THE ELECTRONIC, PROGRAMMABLE, AUTOMATIC CHANGEOVER TYPE TO SEQUENCE HEATING OR COOLING. SET POINT RANGE SHALL BE 10 DEGREES F. BETWEEN FULL HEATING AND COOLING. THEY SHALL HAVE CAPABILITY OF TERMINATING ALL HEATING AT A TEMPERATURE NO MORE THAN 70 DEGREES F., AND COOLING AT A TEMPERATURE NOT LESS THAN 78 DEGREES F. ADJUSTABLE TEMPERATURE DIFFERENTIAL SHALL BE 1– 1/2 DEGREES F. CONTROL LIMITS SHALL BE FROM 55 DEGREES F. TO 85 DEGREES F. MOUNT AT 48 INCHES ABOVE FLOOR OR AS REQUIRED BY LOCAL AUTHORITIES OR HANDICAP CODES.

    NOTES: 1) THERMOSTATS THAT ARE PART OF AN ENERGY MANAGEMENT SYSTEM SHALL FOLLOW CONTROL SPECIFICATIONS AND DRAWING REQUIREMENTS.

    2) SHOULD THE LOCATION OF THE THERMOSTAT NOT MEET THE ADA HEIGHT REQUIREMENTS DUE TO OBSTRUCTIONS, THEN AN ALTERNATE LOCATION SHALL BE PROPOSED OR REQUESTED BY THE CONTRACTOR THAT SHALL BE APPROVED BY THE ENGINEER AND ARCHITECT.
7. LINE VOLTAGE THERMOSTATS SHALL BE FURNISHED BY THE MECHANICAL CONTRACTOR AND INSTALLED BY THE ELECTRICAL CONTRACTOR.
8. CONTROLS CONTRACTOR AND AIR BALANCE CONTRACTOR SHALL COORDINATE WORK AND PERFORM NECESSARY TASKS AS REQUIRED TO OBTAIN AIR AND WATER FLOW QUANTITIES FOR SYSTEMS SHOWN HEREIN.

    CONTROLS SHALL BE PROVIDED TO PROVIDE THE MINIMUM RATE OF OUTDOOR AIR REQUIRED BY THE STATE ENERGY REGULATIONS.
9. ----- AIR DISTRIBUTION -----
1. ALL DUCTWORK SHALL BE SHEET METAL CONSTRUCTED OR SPIRAL ERECTED, AND TESTED IN ACCORDANCE WITH THE MOST RESTRICTIVE OF LOCAL REGULATIONS, PROCEDURES DETAILED IN THE ASHRAE HANDBOOK OF FUNDAMENTALS, CHAPTER 6 OF THE MECHANICAL CODE, OR THE APPLICABLE STANDARDS ADOPTED BY THE SHEET METAL AND AIR CONDITIONING CONTRACTORS NATIONAL ASSOCIATION.
2. CONTRACTOR SHALL PROVIDE EXTERIOR MANUAL VOLUME DAMPER HANDLES W/ LOCK-DOWN AFTER COMPLETING AIR BALANCE & OBTAIN FINAL APPROVAL FROM ENGINEER.
3. ALL FLEXIBLE DUCTWORK SHALL NOT EXCEED SEVEN FEET IN LENGTH TO RESPECTIVE DIFFUSERS, GRILLES, AND REGISTERS, OR OTHER AIR DEVICES.
4. PROVIDE SEISMIC RESTRAINTS TO ALL DUCTWORK, PIPE, AND EQUIPMENT SUPPORTS IN ACCORDANCE WITH THE LATEST SMACNA GUIDELINES FOR SEISMIC RESTRAINT OF MECHANICAL SYSTEMS. SUSPENDED EQUIPMENT SHALL BE PROVIDED WITH SEISMIC ANCHORAGE AND ISOLATION SUPPORTS.
5. ALL DUCT TURNS IN SUPPLY, RETURN, AND EXHAUST DUCTS SHALL HAVE SINGLE WALL TURNING VANES WITH TRAILING EDGE, UNLESS OTHERWISE NOTED.
6. DUCTWORK HANDLING CONDITIONED AIR SHALL BE INSULATED OR LINED AS INDICATED ON DRAWINGS. SUPPLY AND RETURN DUCT INSULATION SHALL BE MIN. 2" THICK, 1.5 LB./CUBIC FT. DENSITY AND HAVE A MIN. VALUE OF R-8 WHERE LOCATED IN ONE OR MORE OF THE FOLLOWING SPACES:

    A) OUTDOORS, OR

    B) IN A SPACE BETWEEN THE ROOF AND AN INSULATED CEILING, OR

    C) IN A SPACE DIRECTLY UNDER A ROOF WITH FIXED VENTS OR OPENINGS TO THE OUTSIDE OR UNCONDITIONED SPACES, OR

    D) IN AN UNCONDITIONED CRAWLSPACE; OR

    E) IN OTHER UNCONDITIONED SPACES

    PER 2016 CEC, OTHERWISE PROVIDE R-6.2 WHEN LOCATED IN CONDITIONED ATTIC SPACES ABOVE CEILINGS . ALL DUCTWORK EXPOSED ON ROOF SHALL BE INTERNALLY LINED WITH 2" THICK, 1.5LB./CUBIC FT. DENSITY DUCT LINER UNLESS OTHERWISE INDICATED OR SPECIFIED. ALL DUCT SIZES ARE NET CLEAR INSIDE DIMENSIONS. ALL DUCT JOINTS SHALL BE SEALED PER CHAPTER 6 MECHANICAL CODE REQUIREMENTS. PROVIDE PIPING AND DUCT INSULATION IN ACCORDANCE WITH THE LATEST STANDARDS OF THE CALIFORNIA ENERGY COMMISSION.
7. ALL INSULATION SHALL HAVE A FLAME SPREAD OF NOT MORE THAN 25 AND A SMOKE DENSITY NOT EXCEEDING 50.
8. MANUAL VOLUME DAMPERS SHALL BE PROVIDED IN ALL DUCT BRANCHES TO INDIVIDUAL DIFFUSERS, GRILLES, AND REGISTERS, AS WELL AS FRESH AIR INTAKE DUCTS. DAMPERS SHALL BE LOCATED AT THE BRANCH DUCT LOCATIONS. THE MECHANICAL CONTRACTOR SHALL COORDINATE LOCATIONS OF DAMPERS WITH THE AIR BALANCE CONTRACTOR PRIOR TO BID, SO THEY ARE ACCESSIBLE PRIOR TO INSTALLATION. IN LOCATIONS WHERE THESE DAMPERS ARE INACCESSIBLE, CABLE OPERATED ADJUSTMENT CONTROLS SHALL BE PROVIDED AT NO ADDITIONAL COST. OPPOSED BLADE DAMPERS SHALL NOT BE PERMITTED UNLESS NOTED OTHERWISE.
9. AUTOMATIC SMOKE FIRE DAMPER REQUIREMENTS ARE AS FOLLOWS:

    A) PROVIDE AUTOMATIC SMOKE FIRE DAMPERS AT ALL PENETRATIONS OF FIRE-RATED CEILINGS AND WALLS THROUGHOUT. CONTRACTOR SHALL COORDINATE FIRE-RATED AREAS WITH THE MECHANICAL DRAWINGS AND OTHER TRADES PRIOR TO INSTALL AND SHALL NOTIFY PERTINENT PARTIES PRIOR TO ANY WORK PERFORMED IN THESE AREAS. IN ADDITION, CONTRACTOR SHALL BE RESPONSIBLE TO PROVIDE PROPER ACCESS FOR DAMPERS INSTALLED. THE DAMPER FIRE RATING SHALL BE COMPATIBLE WITH THE CEILING/WALL RATING.

    B) LOCATION OF FIRE-RATED CEILINGS AND WALLS ARE AS INDICATED ON THE MECHANICAL DRAWINGS.

    C) FIRE AND/OR SMOKE DAMPER(S) SHALL BE PROVIDED AS REQUIRED BY THE LATEST CALIFORNIA BUILDING CODE.

    D) CONTRACTOR SHALL FURNISH FLUSH MOUNTED FIRE AND/OR SMOKE DAMPERS, SO THAT DAMPER DO NOT EXTEND PASS WALLS, FOR AREAS WITHOUT CEILINGS FOR QUALITY WORKMANSHIP.
10. CONTRACTOR SHALL PERFORM MAINTENANCE ON ALL EXISTING FIRE AND SMOKE/FIRE DAMPERS PER MANUFACTURER'S PROVISIONS. ANY FAILURES OR NON-OPERATING DAMPERS SHALL BE REPLACED AND SHALL CONFORM TO CURRENT CODE REGULATIONS.
11. ALL DUCTWORK PASSING THROUGH FIRE RATED CORRIDORS AND LOBBIES SHALL BE MIN. 26 GAGE SHEET METAL CONSTRUCTION.
12. ALL DUCTWORK, PIPING, CONDUIT, & ETC. PENETRATING FIRE RATED CONSTRUCTION SHALL HAVE APPROVED FIRE STOPPING.
13. UNLESS OTHERWISE NOTED THE CONTRACTOR SHALL BE RESPONSIBLE FOR FURNISHING AND INSTALLING EXTERIOR LOUVERS CALLED OUT HEREIN. COORDINATE SIZE(S) AND LOCATION(S) WITH OTHER TRADES AS NECESSARY PRIOR TO BID.

----- ROOFING -----

1. CONTRACTOR TO REMOVE (E) ROOFING AS REQUIRED AND RE-ROOF OVER NEW EQUIPMENT PAD WITH MEMBRANE TO MATCH (E). NEW ROOF MEMBRANE TO TIE INTO (E) MEMBRANE PER MEMBRANE MANUFACTURER'S REQUIREMENTS.

LEGEND

SYMBOL	ABBR.	DESCRIPTION
	–	SUPPLY AIR RISER
	–	RETURN AIR RISER
	–	EXHAUST AIR RISER
	SAG	SUPPLY AIR GRILLE
	RAG	RETURN AIR GRILLE
	EAG	EXHAUST AIR GRILLE
	SWR	SIDEWALL REGISTER
	(L)	LINED DUCTWORK
	–	FLEXIBLE CONNECTION
	FC	FLEXIBLE CONNECTION
	–	NEW DUCT (SEE PLAN)
	–	EXISTING DUCT (SEE PLAN)
	–	DEMO DUCT (SEE PLAN)
	MVD	MANUAL VOLUME DAMPER
	BDD	BACKDRAFT DAMPER
S/F	SFD	SMOKE / FIRE DAMPER
F	FD	FIRE DAMPER
	DL	DOOR LOUVER
U.C.	UC	UNDERCUT DOOR 3/4"
RS	RS	REFRIGERANT SUCTION LINE
RL	RL	REFRIGERANT LIQUID LINE
CD	CD	CONDENSATE DRAIN
	S.D.	SMOKE DETECTOR
	P.O.C.	POINT OF CONNECTION
	T-STAT	THERMOSTAT
H	H	HUMIDISTAT
TS	TS	TEMPERATURE SENSOR
OS	OS	OVERRIDE SWITCH
PD	PD	PRESSURE DIFFERENTIAL SWITCH
S	S	SWITCH
	O.C.	ON CENTER
	HWR	HOT-WATER RETURN
	HWS	HOT-WATER SUPPLY
	I.D.	INSIDE DIAMETER
	O.D.	OUTSIDE DIAMETER
	W/	WITH
	S/M	SHEET METAL
	S/S	STAINLESS STEEL
	G.C.	GENERAL CONTRACTOR
	VTR	VENT THRU ROOF
	EMS	ENERGY MANAGEMENT SYSTEM
	OBD	OPPOSED BLADE DAMPER
	FSC	FAN SPEED CONTROL
E	E	ITEMS FURNISHED AND INSTALLED BY ELECTRICAL CONTRACTOR AS SPECIFIED ON THE ELECTRICAL CONTRACT DOCUMENTS
M	M	ITEMS FURNISHED AND INSTALLED BY MECHANICAL CONTRACTOR AS SPECIFIED ON THE MECHANICAL CONTRACT DOCUMENTS
EM	EM	ITEMS FURNISHED BY ELECTRICAL CONTRACTOR AND INSTALLED BY MECHANICAL CONTRACTOR.
ME	ME	ITEMS FURNISHED BY MECHANICAL CONTRACTOR AND INSTALLED BY ELECTRICAL CONTRACTOR.
	C.C.	CONTROLS CONTRACTOR
	CBD	COUNTER-BALANCE DAMPER
DS	D.S.	DOOR SWITCH

SHEET INDEX

S.NO.	SHEET No.	SHEET TITLE
1	M-01	MECHANICAL GENERAL NOTE AND LEGEND
2	M-02	MECHANICAL SCHEDULES
3	M-2.0	MECHANICAL BUILDING A DEMOLITION AND REMODEL PLANS
4	M-2.1	MECHANICAL BUILDING C DEMOLITION AND REMODEL PLANS
5	M-2.2	MECHANICAL BUILDING D DEMOLITION AND REMODEL PLANS
6	M-2.3	MECHANICAL BUILDING E DEMOLITION AND REMODEL PLANS
7	M-2.4	MECHANICAL BUILDING F DEMOLITION AND REMODEL PLANS
8	M-2.5	MECHANICAL BUILDING G DEMOLITION AND REMODEL PLANS
9	M-2.6	MECHANICAL BUILDING K DEMOLITION AND REMODEL PLANS
10	M-3.1	MECHANICAL SECTIONS
11	M-4.1	MECHANICAL DETAILS
12	M-4.3	MECHANICAL DETAILS
13	M-4.4	MECHANICAL DETAILS
14	M-5.1	MECHANICAL CONTROLS
15	M-5.2	MECHANICAL CONTROLS
16	M-5.3	MECHANICAL CONTROLS
17	M-5.4	MECHANICAL CONTROLS
18	M-5.5	MECHANICAL CONTROLS
19	M-6.0	TITLE 24 BUILDING A
20	M-6.1	TITLE 24 BUILDING C
21	M-6.2	TITLE 24 BUILDING D
22	M-6.3	TITLE 24 BUILDING E
23	M-6.4	TITLE 24 BUILDING F
24	M-6.5	TITLE 24 BUILDING G
25	M-6.6	TITLE 24 BUILDING K

PIPING, DUCTWORK, AND ELECTRICAL DISTRIBUTION SYSTEM BRACING NOTE

PIPING, DUCTWORK AND ELECTRICAL DISTRIBUTION SYSTEMS SHALL BE BRACED TO COMPLY WITH THE FORCES AND DISPLACEMENTS PRESCRIBED IN ASCE 7-10 SECTION 13.3.3 AS DEFINED IN ASCE 7-10 SECTION 13.6.5.6, 13.6.7. 13.6.8 AND 2016 CBC, SECTIONS 1616A.1.24, 1616A.1.25, AND 1616A.1.26.

THE METHOD OF SHOWING BRACING AND ATTACHMENTS TO THE STRUCTURE FOR THE IDENTIFIED DISTRIBUTION SYSTEM ARE AS NOTED BELOW. WHEN BRACING AND ATTACHMENTS ARE BASED ON A PREAPPROVED INSTALLATION GUIDE (E.G. SMACNA OR OSHPD OPM), COPIES OF THE BRACING SYSTEM INSTALLATION GUIDE OR MANUAL SHALL BE AVAILABLE ON THE JOBSITE PRIOR TO THE START OF AND DURING THE HANGING AND BRACING OF THE DISTRIBUTION SYSTEMS. THE STRUCTURAL ENGINEER OF RECORD SHALL VERIFY THE ADEQUACY OF THE STRUCTURE TO SUPPORT THE HANGER AND BRACE LOADS.

MECHANICAL PIPING (MP), MECHANICAL DUCTS (MD), PLUMBING PIPING (PP), ELECTRICAL DISTRIBUTION SYSTEMS (E):

MPX MD_ PP_ E_ – OPTION 1: DETAILED ON THE APPROVED DRAWINGS WITH PROJECT SPECIFIC NOTES AND DETAILS.

MP_ MD_ PP_ E_ – OPTION 2: SHALL COMPLY WITH THE APPLICABLE DRAWINGS WITH PROJECT SPECIFIC NOTES AND DETAILS.

MP_ MD_ PP_ E_ – OPTION 3: SHALL COMPLY WITH THE SMACNA SEISMIC RESTRAINT MANUAL, OSHPD EDITION (2009), INCLUDING ANY ADDENDA. FASTENERS AND OTHER ATTACHMENTS NOT SPECIFICALLY IDENTIFIED IN THE SMACNA SEISMIC RESTRAINT MANUAL, OSHPD EDITION, ARE DETAILED ON THE APPROVED DRAWINGS WITH PROJECT SPECIFIC NOTES AND DETAILS. THE DETAILS SHALL ACCOUNT FOR THE APPLICABLE SEISMIC HAZARD LEVEL_____ AND THE CONNECTION LEVEL_____ FOR THE PROJECT AND CONDITIONS. .

MEP COMPONENT ANCHORAGE NOTE

ALL MECHANICAL, PLUMBING AND ELECTRICAL COMPONENTS SHALL BE ANCHORED AND INSTALLED PER THE DETAILS ON THE DSA APPROVED CONSTRUCTION DOCUMENTS. WHERE NO DETAIL IS INDICATED, THE FOLLOWING COMPONENTS SHALL BE ANCHORED OR BRACED TO MEET THE FORCE AND DISPLACEMENT REQUIREMENTS PRESCRIBED IN THE 2016 CBC, SECTION 1616A.1.18 THROUGH 1616A.1.26 AND ASCE 7-10 CHAPTER 13, 26 AND 30.

1. ALL PERMANENT EQUIPMENT AND COMPONENTS.
2. TEMPORARY OR MOVABLE EQUIPMENT THAT IS PERMANENTLY ATTACHED (e.g. HARD WIRE) TO THE BUILDING UTILITY SERVICES SUCH AS ELECTRICITY, GAS OR WATER.
3. MOVABLE EQUIPMENT WHICH IS STATIONED IN ONE PLACE FOR MORE THAN 8 HOURS AND HEAVIER THAN 400 POUNDS ARE REQUIRED TO BE ANCHORED WITH TEMPORARY ATTACHMENTS.

THE ATTACHMENT OF THE FOLLOWING MECHANICAL AND ELECTRICAL COMPONENTS SHALL BE POSITIVELY ATTACHED TO THE STRUCTURE, BUT NEED NOT BE DETAILED ON THE PLANS. THE PROJECT INSPECTOR WILL VERIFY THAT THESE ITEMS HAVE BEEN POSITIVELY ATTACHED. THESE COMPONENTS SHALL HAVE FLEXIBLE CONNECTIONS PROVIDED BETWEEN THE COMPONENT AND ASSOCIATED DUCTWORK, PIPING AND CONDUIT.

A. COMPONENTS WEIGHING LESS THAN 400 POUNDS AND HAVE A CENTER OF MASS LOCATED 4 FEET OR LESS ABOVE THE ADJACENT FLOOR OR ROOF LEVEL THAT DIRECTLY SUPPORT THE COMPONENT.
B. COMPONENTS WEIGHING LESS THAN 20 POUNDS, OR IN THE CASE OF DISTRIBUTED SYSTEMS, LESS THAN 5 POUNDS PER FOOT, WHICH ARE SUSPENDED FROM A ROOF OR FLOOR OR HUNG FROM A WALL.

FOR THOSE ELEMENTS THAT DO NOT REQUIRE DETAILS ON THE APPROVED DRAW

VARIABLE AIR VOLUME BOX SCHEDULE

TAG	MFR. & MODEL #	AC UNIT	ROOM	SIZE, IN.		CFM		WEIGHT (LB)	ANCHORAGE DETAIL	REMARKS
				INLET	OUTLET	MAX	MIN			
VAV1 C	CARRIER 35E12	AC1 C	CLASSROOM 103C	12	16"X14"	1,400	350	35	3 S1.0 / 11 M-4.7	1
VAV2 C	CARRIER 35E12	AC1 C	CLASSROOM 104C	12	16"X14"	1,400	350	35	3 S1.0 / 11 M-4.7	1
VAV3 C	CARRIER 35E12	AC1 C	CLASSROOM 105C	12	16"X14"	1,400	350	35	3 S1.0 / 11 M-4.7	1
VAV4 C	CARRIER 35E12	AC1 C	CLASSROOM 112C	12	16"X14"	1,400	350	35	3 S1.0 / 11 M-4.7	1
VAV5 C	CARRIER 35E	AC1 C	CLASSROOM 113C	12	16"X14"	1,400	350	35	3 S1.0 / 11 M-4.7	1
VAV6 C	CARRIER 35E	AC1 C	CLASSROOM 114C	12	16"X14"	1,400	350	35	3 S1.0 / 11 M-4.7	1
VAV1 D	CARRIER 35E	AC1 D	CLASSROOM 103D	12	16"X14"	1,400	350	35	3 S1.0 / 11 M-4.7	1
VAV2 D	CARRIER 35E	AC1 D	CLASSROOM 104D	12	16"X14"	1,400	350	35	3 S1.0 / 11 M-4.7	1
VAV3 D	CARRIER 35E	AC1 D	CLASSROOM 105D	12	16"X14"	1,400	350	35	3 S1.0 / 11 M-4.7	1
VAV4 D	CARRIER 35E	AC1 D	CLASSROOM 112D	12	16"X14"	1,400	350	35	3 S1.0 / 11 M-4.7	1
VAV5 D	CARRIER 35E	AC1 D	CLASSROOM 113D	12	16"X14"	1,400	350	35	3 S1.0 / 11 M-4.7	1
VAV6 D	CARRIER 35E	AC1 D	CLASSROOM 114D	12	16"X14"	1,400	350	35	3 S1.0 / 11 M-4.7	1
VAV1 F	CARRIER 35E	AC1 F	CLASSROOM 103F	12	16"X14"	1,400	350	35	3 S1.0 / 11 M-4.7	1
VAV2 F	CARRIER 35E	AC1 F	CLASSROOM 104F	12	16"X14"	1,400	350	35	3 S1.0 / 11 M-4.7	1
VAV3 F	CARRIER 35E	AC1 F	CLASSROOM 105F	12	16"X14"	1,400	350	35	3 S1.0 / 11 M-4.7	1
VAV4 F	CARRIER 35E	AC1 F	CLASSROOM 109F	12	16"X14"	1,400	350	35	3 S1.0 / 11 M-4.7	1
VAV5 F	CARRIER 35E	AC1 F	CLASSROOM 110F	12	16"X14"	1,400	350	35	3 S1.0 / 11 M-4.7	1
VAV6 F	CARRIER 35E	AC1 F	CLASSROOM 111F	12	16"X14"	1,400	350	35	3 S1.0 / 11 M-4.7	1
VAV1 G	CARRIER 35E	AC1 G	CLASSROOM 108G	12	16"X14"	1,350	350	35	3 S1.0 / 11 M-4.7	1
VAV2 G	CARRIER 35E	AC1 G	CLASSROOM 107G	12	16"X14"	1,275	350	35	3 S1.0 / 11 M-4.7	1
VAV3 G	CARRIER 35E	AC1 G	CLASSROOM 108G	12	16"X14"	1,275	350	35	3 S1.0 / 11 M-4.7	1
VAV4 G	CARRIER 35E	AC1 G	SPEECHROOM 101G	6	12"X8"	250	50	23	3 S1.0 / 11 M-4.7	1
VAV1 K	CARRIER 35E	AC1 K	CLASSROOM 115K	12	16"X14"	2,000	400	35	3 S1.0 / 11 M-4.7	1
VAV2 K	CARRIER 35E	AC1 K	CLASSROOM 107K	14	16"X14"	2,800	560	43	3 S1.0 / 11 M-4.7	1
VAV3 K	CARRIER 35E	AC1 K	CLASSROOM 101K	12	16"X14"	2,000	400	35	3 S1.0 / 11 M-4.7	1

REMARKS

1. PROVIDE CARRIER ZS PRO SPACE SENSOR.

PACKAGED GAS/ELECTRIC A/C UNIT SCHEDULE

SYMBOL	MAKE	MODEL	TYPE	AC TONNAGE	COOLING CAPACITY		HEAT. INPUT	OSA	EER	SUPPLY FAN			ELECTRICAL				UNIT WT	ANCHORAGE DETAIL	CONTROL DETAIL	REMARKS
					SENSIBLE(MBH)	TOTAL (MBH)	CAP. (MBH)	CFM		ESP	CFM	BHP	VOLTS	PH	MCA	MOCP	(LBS)			
AC1 A	CARRIER	48VLNC60	CV	5T	57.08	42.14	90	400	–	0.6	2,000	0.97	208	1	38.3	60	460	6 M-4.7	1 M-5.7	2, 3, 4, 5
AC1 C	CARRIER	48LCDB24A7A5	VAV	20T	187.84	252.02	176	2,100	10.94	1.25	7,500	9.83	208	3	130.8	150	2650	10 M-4.7	2 M-5.7	1, 2, 4, 5
AC1 D	CARRIER	48LCDB24A6A5	VAV	20T	194.22	254.59	176	2,100	10.94	1.25	7,500	9.83	208	3	130.8	150	2650	9 M-4.7	2 M-5.7	1, 2, 4, 5, 8
AC1 F	CARRIER	48LCDB24A6A5	VAV	20T	194.22	254.59	176	2,100	10.94	1.25	7,500	9.83	208	3	130.8	150	2650	10 M-4.7	2 M-5.7	1, 2, 4, 5
AC1 G	CARRIER	48LCDB12A2A5	VAV	10T	90.52	120.45	144	1,100	13.0	1.25	3,750	2.62	208	3	54	60	2025	13 M-4.7	2 M-5.7	2, 4, 5, 6, 7
AC1 K	CARRIER	48LCDB20A7A5	VAV	17.5T	153.24	203.46	176	1,360	11.2	1.25	6,575	7.94	208	3	104.6	125	2500	10 M-4.7	2 M-5.7	1, 2, 4, 5

REMARKS:

1. FACTORY PROVIDE NON-MODULATING POWER EXHAUST HORIZONTAL APPLICATION MOUNTING RETURN AIR DUCT WITH DRY BULB ECONOMIZER. POWER EXHAUST POWERED FROM UNIT.
2. PROVIDE HORIZONTAL SUPPLY AND RETURN.
3. FRESH AIR HOOD
4. 2" FILTERS (MERV 8)
5. TIME GUARD II CONTROL CIRCUIT
6. CONTRACTOR TO PROVIDE M.W. SAUSSE & CO., INC. 14" HIGH AC CURB AND MANUFACTURER STAMPED STRUCTURAL CALCULATION. (SEE M-4.3).
7. PROVIDE CANFAB MODULATING POWER EXHAUST HORIZONTAL APPLICATION MOUNTING AC UNIT WITH DRY BULB ECONOMIZER. PROVIDE SEPARATE POWER FOR CANFAN MODULATING POWER (MCA- 11.38 / MOCP - 20.48).
8. CONTRACTOR TO PROVIDE M.W. SAUSSE & CO., INC. CUSTOM 30" HIGH AC CURB WITH RETURN DUCT THRU CURB AND MANUFACTURER STAMPED STRUCTURAL CALCULATION. (SEE M-4.4).

NOTES

1. CONTRACTOR TO VERIFY FINAL UNIT LOCATIONS PRIOR TO INSTALLATION.
2. ELECTRICAL SHALL PROVIDE ONE DISCONNECT SWITCH AND SINGLE FEED FOR UNIT AND POWER EXHAUST.
3. POWER EXHAUST FLA AND MCA INCLUDED IN SCHEDULE EXCEPT AC1/G. SEE REMARK 7.

AIR DISTRIBUTION SCHEDULE

SYM.	MFR. & MODEL #	NECK SIZE	CFM RANGE	MAX. NECK VELOCITY	MAX. N.C.	S.P. DROP	TYPE	DAMPER	REMARKS
– SD-1	KRUEGER 1240	8"x8" 10"x10" 12"x12" 14"x14" 16"x16" 18"x18"	0-170 171-270 271-390 391-540 541-700 701-900	400	30	.06	MODULAR	NONE	FRAME 23 FOR T-BAR
– RG-3	KRUEGER EGC5	48"X24"	0-3600	400	30	.03	EGG-CRATE	NONE	–

LEGEND

400 / SD-1 — CFM / AIR DISTRIBUTION DEVICE

SD	SUPPLY DIFFUSER
RG	RETURN GRILLE
TG	TRANSFER GRILLE
EG	EXHAUST GRILLE

ZONE AND BYPASS DAMPER SCHEDULE

SYM	MFR & MODEL #	AC UNIT	AREA SERVICED	CFM		MIN. S.P.	INLET SIZE	WT	REMARKS
				MAX.	MIN.				
ZD 1	CARRIER 35E	ACB 1	RECEPTION/WAITING 101/102	1,400	350	0.05	16"ø	47	1
ZD 2	CARRIER 35E	ACB 1	CONFERENCE 106	1,400	350	0.05	16"ø	47	1
ZD 3	CARRIER 35E	ACB 1	OFFICE 104	1,400	350	0.05	16"ø	47	1
ZD 4	CARRIER 35E	ACB 1	OFFICE 103	1,400	350	0.05	16"ø	47	1
BD 1	CARRIER	ACB 1	SEE PLAN	1,400	350	0.05	16"ø	47	2

1. PROVIDE OPN-VVTZC ZONE DAMPER CONTROLLER
2. PROVIDE CARRIER BYPASS DAMPER CONTROLLER

WLC ARCHITECTS
CLIENT FOCUSED • PASSION DRIVEN
SOUTHERN CALIFORNIA
8163 ROCHESTER AVENUE, SUITE 100
RANCHO CUCAMONGA
CALIFORNIA 91730-0729
TEL: 909-987-0909
www.wlcarchitects.com

LONGFELLOW ELEMENTARY SCHOOL HVAC REPLACEMENT

COMPTON UNIFIED SCHOOL DISTRICT
1101 S DWIGHT AVE.
COMPTON, CA 90220

LICENSED ARCHITECT — MARK GRAHAM C-26046 03-31-19 — STATE OF CALIFORNIA

REGISTERED PROFESSIONAL ENGINEER — RAMEZ BANEKAS No. M29253, Exp. 6/30/19 — MECHANICAL — STATE OF CALIFORNIA

CONSULTANT

IDENTIFICATION STAMP
DIV. OF THE STATE ARCHITECT
OFFICE OF REGULATION SERVICES
APPL 03-118423
AC FLS SS KEY
DATE MAR 06 2018
FILE: 19-23

NO	DATE	BY	DESCRIPTION
1			REVISIONS

DRAWN: KC | CHECKED:
DATE: 3/6/2018 | SCALE:
PROJECT NUMBER: 570064

MECHANICAL SCHEDULES

DRAWING NUMBER: M-02

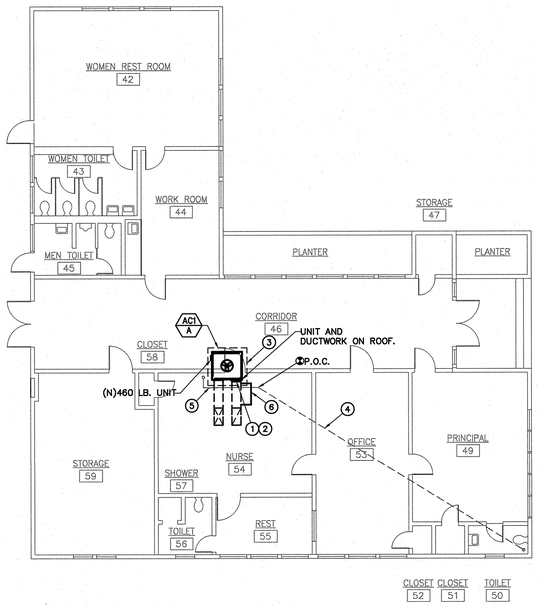

NORTH

BUILDING A - REMODEL FLOOR PLAN | 1/8" = 1'-0" | 1

CONSTRUCTION KEY NOTES:

1. CONTRACTOR TO PROVIDE FLEX. DUCT BETWEEN NEW AC UNIT AND EXISTIGN DUCTWORK. PROVIDE ALL DUCT TRANSITION AS REQUIRED TO CONNECT EXISTING DUCTWORK.
2. CONTRACTOR TO PROVIDE EXTENSION ON GAS PIPING AND CONDENSATE AS REQUIRED AND CONNECT EXISTING GAS AND CONDENSATE DRAIN TO NEW AC UNITS. PROVIDE A NEW VENTED P TRAP IF NECESSARY.
3. EXISTING EQUIPMENT PLATFORM. SEE STRUCTURAL SHEET DETAIL #2/S1.0 AND #6/M-4.1.
4. PARTIAL EXISTING CONDENSATE DRAIN TO REMAIN.
5. NEW CONDENSATE DRAIN.
6. NEW O.S.A. HOOD TO BE PROVIDED.

CONSTRUCTION NOTES:

1. FRESH AIR INTAKE(S) SHALL BE 10'-0"(MIN.) AWAY OR 3'-0" (MIN.) BELOW ANY EXHAUST OUTLET, PLUMBING VENT, OR FLUE.

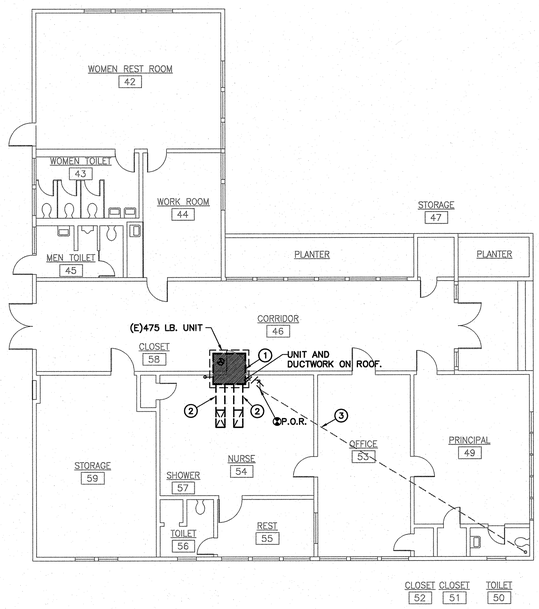

NORTH

BUILDING A - DEMOLITION FLOOR PLAN | 1/8" = 1'-0" | 2

DEMOLITION KEY NOTES:

1. EXISTING AC UNIT AND ALL RELATED ACCESSORIES TO BE REMOVED AND WITH NEW. EXISTING EQUIPMENT FLATFORM TO REMAIN.
2. EXISTING SUPPLY AND RETURN DUCTWORK TO REMAIN.
3. PARTIAL EXISTING CONDENSATE DRAIN TO REMAIN.

DEMOLITION NOTES:

1. OWNER SHALL HAVE FIRST RIGHT OF REFUSAL ON ALL ITEMS TO BE REMOVED. CONTRACTOR SHALL VERIFY ALL SUCH ITEMS WITH OWNER PRIOR TO REMOVAL. ALL ITEMS NOT REFUSED BY OWNER SHALL BE REMOVED INTACT AND FULLY FUNCTIONAL BY CONTRACTOR AND RETURNED TO OWNER. ALL ITEMS REFUSED BY OWNER SHALL BE PROPERLY DISPOSED OF BY CONTRACTOR.
2. PLUMBING CONTRACTOR SHALL DISCONNECT EXISTING GAS AND CONDENSATE DRAIN PIPES FROM MECHANICAL EQUIPMENT TO BE REMOVED AND REPLACED — AS REQUIRED FOR NEW CONNECTION TO NEW AC UNIT.
3. CONTRACTOR SHALL RE-USE EXISTING OPENINGS IN WALLS AND ROOF. COORDINATE WITH OTHER TRADES AS NECESSARY.
4. GENERAL CONTRACTOR SHALL PATCH ALL OPENINGS IN WALLS, ROOF, ETC. THAT WILL NOT BE REUSED FOR FUTURE WORK. COORDINATE AS NECESSARY WITH OTHER TRADES.
5. PRIOR TO ANY WORK BEING DONE CONTRACTOR SHALL MAKE A CAREFUL EVALUATION OF THE EXISTING CONDITIONS AND VERIFY ALL METHODS OF REMOVAL AND INSTALLATION OF MECHANICAL EQUIPMENT.
6. CONTRACTOR SHALL COORDINATE ALL DEMOLITION WORK WITH THE WORK OF ALL OTHER TRADES
7. PATCH ROOF AS NECESSARY. PATCH FLASHINGS AS NECESSARY.

WLC ARCHITECTS
CLIENT FOCUSED • PASSION DRIVEN
SOUTHERN CALIFORNIA
8163 ROCHESTER AVENUE, SUITE 100
RANCHO CUCAMONGA
CALIFORNIA 91730-0729
TEL: 909-987-0909
www.wlcarchitects.com

LONGFELLOW ELEMENTARY SCHOOL HVAC REPLACEMENT

COMPTON UNIFIED SCHOOL DISTRICT
1101 S DWIGHT AVE.
COMPTON, CA 90220

LICENSED ARCHITECT — MARC GRAHAM — C-26046 — 03-31-19 — STATE OF CALIFORNIA
REGISTERED PROFESSIONAL ENGINEER — BRIAN BAKER — No. M29253 — Exp. 6/30/19 — MECHANICAL — STATE OF CALIFORNIA

CONSULTANT

IDENTIFICATION STAMP
DIV. OF THE STATE ARCHITECT
OFFICE OF REGULATION SERVICES
APPL 03-118423
AC — FLS — SS EY
DATE MAR 01 2019
R.E.: 19-23

NO	DATE	BY	DESCRIPTION
1			REVISIONS

DRAWN: KC | CHECKED:
DATE: 3/6/2018 | SCALE:
PROJECT NUMBER: 570064

BUILDING A DEMO AND REMODEL FLOOR PLANS

DRAWING NUMBER: M-2.0

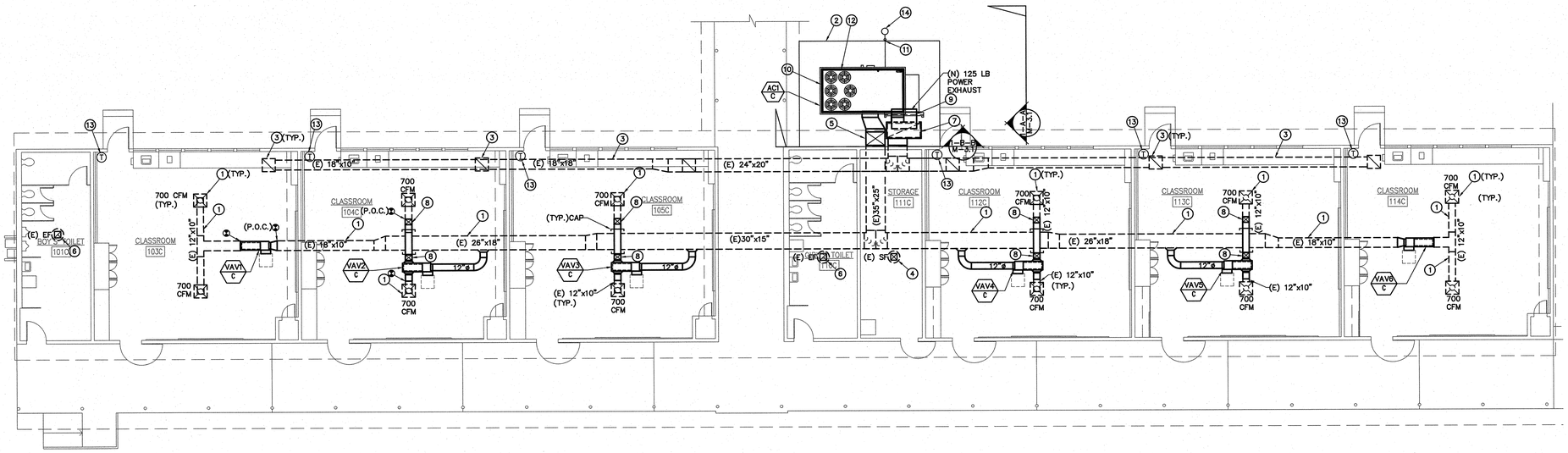

CONSTRUCTION KEY NOTES:

1. EXISTING MAIN SUPPLY DUCTWORK AND SUPPLY AIR DIFFUSERS TO REMAIN. SEE SHEET #2,#3, AND #4/M-4.1 FOR CEILING DIFFUSER AND DUCT SUPPORT DETAIL.
2. NEW FENCE AND CONCRETE PAD.
3. EXISTING MAIN RETURN DUCT AND GRILLES TO REMAIN SEE SHEET #2,#3, AND #4/M-4.1 FOR CEILING DIFFUSER AND DUCT SUPPORT DETAIL.
4. EXISTING SUPPLY FAN AND DUCTWORK TO REMAIN.
5. NEW 35"X25"(L) SUPPLLY AIR DUCT. 40"X28" SHEET METAL SIZES. SEE STRUCTURAL DETAIL SHEET #1/S2.1.
6. EXISTING EXHAUST FAN AND DUCTWORK TO REMAIN.
7. NEW 60"X26"(L) RETURN AIR DUCT. 64"X30" SHEET METAL SIZES. SEE STRUCTURAL DETAIL SHEET #1/S2.1.
8. CONTRACTOR TO OFFSET NEW (W) 12"X10" DUCT ABOVE MAIN SUPPLY DUCT.
9. POWER EXHAUST MOUNTED ON THE NEW RETURN DUCT. SEE STRUCTURAL DETAIL SHEET #1/S2.1.
10. NEW 20 TON AC UNIT WILL BE ON CONCRETE PAD. SEE DETAIL SHEET # 10/M-4.1 FOR PAD.
11. 3/4" CONDENSATE DRAIN TO DRY WELL. PROVIDE NEW VENTED P-TRAP IF NECESSARY.
12. CONTRACTOR TO PROVIDE EXTENSION ON GAS PIPING AS REQUIRED TO RECONNECT EXISTING GAS PIPING TO NEW AC UNIT.
13. ELECTRONIC EMS THERMOSTAT MOUNT AT 48" A.F.F. SEE DETAIL SHEET #7/M-4.1 FOR A/C CONTROL.
14. NEW DRY WELL. SEE DETAIL SHEET #5/M-4.1.

CONSTRUCTION NOTES:

1. CONTRACTOR SHALL COORDINATE WORK WITH OTHER TRADES AS NECESSARY PRIOR TO INSTALLATION.
2. CONTRACTOR SHALL MAINTAIN PROPER CLEARANCES FROM ALL ELECTRICAL EQUIPMENT AND SERVICE CLEARANCES FOR MECHANICAL EQUIPMENT.
4. FRESH AIR INTAKES SHALL BE 10'-0" MIN. AWAY FROM ALL EXHAUST OUTLETS, PLUMBING VENTS, AND FLUES.
5. CONTRACTOR SHALL COORDINATE EXACT EQUIPMENT PAD SIZES AND LOCATIONS WITH OTHER TRADES PRIOR TO INSTALLATION.
6. MAINTAIN MANUFACTURER MIN. CLEARANCES ON ALL AC UNITS.
7. BEFORE BIDDING ON THIS WORK, THE CONTRACTOR SHALL MAKE A CAREFUL EXAMINATION OF THE PREMISES, EXISTING EQUIPMENT AND SERVICES. HE SHALL DEFINITELY DETERMINE IN ADVANCE, THE METHODS OF INSTALLING AND CONNECTING THE NEW EQUIPMENT, DUCTWORK, AND PIPING THE MEANS TO BE PROVIDED FOR GETTING THE EQUIPMENT AND MATERIALS INTO PLACE AND SHALL MAKE HIMSELF THOROUGHLY FAMILIAR WITH ALL OF THE REQUIREMENTS OF THE PROJECT. FAILURE TO VSIT THE SITE WLL IN NO WAY RELIEVE THE SUCCESSFUL CONTRACTOR OF THE NECESSITY OF FURNISHING ANY MATERIAL OR PERFORMING ANY WORK THAT MAY BE REQUIRED TO COMPLETE THE WORK IN ACCORDANCE WITH THE DRAWINGS AND SPECIFICATIONS. THIS ADDITIONAL WORK SHALL BE PERFORMED WITHOUT ADDITIONAL COST TO THE OWNER.
8. BEFORE COMMENCEMENT OF WORK, THE CONTRACTOR SHALL VERIFY THE EXACT LOCATIONS AND DIMENSIONS OF ALL EXISTING EQUIPMENT AND ELECTRICAL SERVICES IN THE AREA OF CONSTRUCTION AND NOTIFY THE ENGINEER OF ANY DISCREPANCIES.

NORTH

BUILDING C - REMODEL FLOOR PLAN | 1/8" = 1'-0" | 1

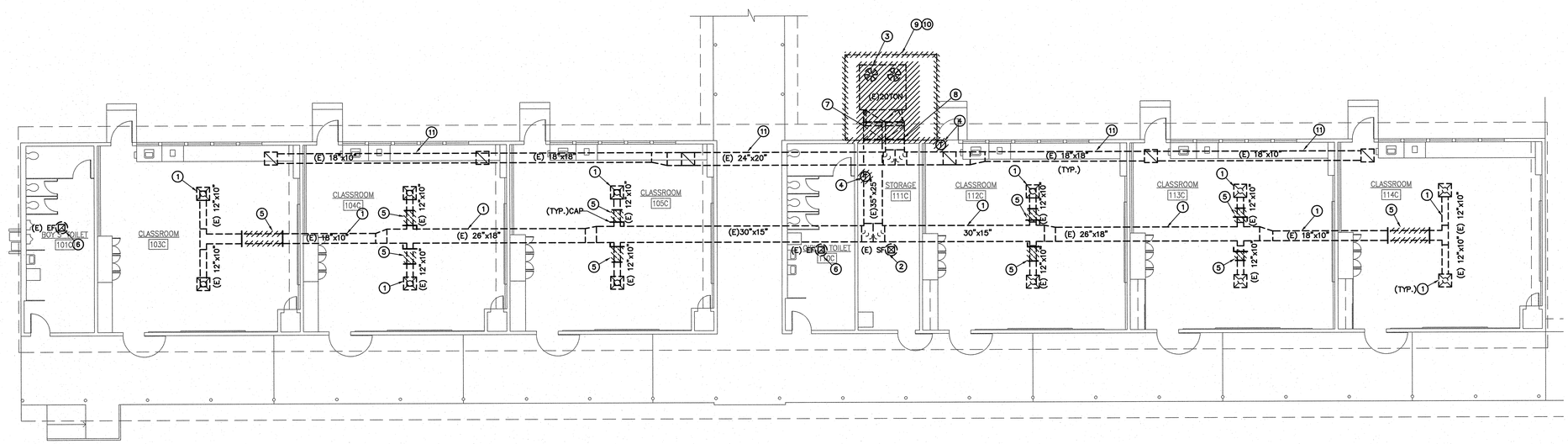

DEMOLITION KEY NOTES:

1. EXISTING MAIN SUPPLY DUCTWORK AND SUPPLY AIR DIFFUSERS TO REMAIN.
2. EXISTING SUPPLY FAN AND DUCTWORK TO REMAIN.
3. EXISTING AC UNIT. AC UNIT CURB AND RELATED ACCESSORIES TO BE REMOVED AND REPLACED WITH NEW AC UNIT.
4. EXISTING T-STAT TO BE REMOVED.
5. PARTIAL EXISTING SUPPLY AIR DUCT AND EXISTING MANUAL VOLUME DAMPER TO BE REMOVED. CAP UNUSED DUCT OPENING.
6. EXISTING EXHAUST FAN AND DUCTWORK TO REMAIN.
7. EXISTING 30"X25" MAIN SUPPLY AIR DUCT TO BE REMOVED AND REPLACED.
8. EXISTING 35"X25" RETURN DUCT TO BE REMOVED AND REPLACED.
9. EXISTING CONCRETE PAD TO BE REMOVED AND REPLACED WITH A NEW PAD.
10. EXISTING FENCE TO BE REMOVED AND REPLACED WITH A NEW FENCE AT A NEW LOCATION.
11. EXISTING MAIN RETURN DUCT AND AIR GRILLES TO REMAIN.

GENERAL DEMOLITION NOTES

1. OWNER SHALL HAVE FIRST RIGHT OF REFUSAL ON ALL ITEMS TO BE REMOVED. CONTRACTOR SHALL VERIFY ALL SUCH ITEMS WITH OWNER PRIOR TO REMOVAL. ALL ITEMS NOT REFUSED BY OWNER SHALL BE REMOVED INTACT AND FULLY FUNCTIONAL BY REFUSED BY OWNER SHALL BE PROPERLY DISPOSED OF BY CONTRACTOR.
2. CONTRACTOR SHALL RE-USE EXISTING OPENINGS IN WALLS AND ROOF WHEREVER POSSIBLE. COORDINATE WITH OTHER TRADES AS NECESSARY. GENERAL CONTRACTOR SHALL MODIFY OPENING AS REQUIRED TO ACCOMODATE NEW MECHANICAL DEVICE.
3. GENERAL CONTRACTOR SHALL PATCH ALL OPENINGS IN WALLS, ROOF, ETC. THAT WILL NOT BE REUSED FOR FUTURE WORK. COORDINATE AS NECESSARY WITH OTHER TRADES.
4. CONTRACTOR SHALL COORDINATE WITH OWNER PRIOR TO ANY WORK BEING DONE STORAGE OF MECHANICAL EQUIPMENT TO BE RE-USED DURING CONSTRUCTION.
5. PRIOR TO ANY WORK BEING DONE CONTRACTOR SHALL MAKE A CAREFUL EVALUATION OF THE EXISTING CONDITIONS AND VERIFY ALL METHODS OF REMOVAL AND INSTALLATION OF MECHANICAL EQUIPMENT.
6. CONTRACTOR SHALL COORDINATE ALL DEMOLITION WORK WITH THE WORK OF ALL OTHER TRADES.
7. CONTRACTOR SHALL CLEAN ALL AIR DEVICES AND DUCTWORK TO REMAIN PER SPECIFICATIONS.
8. CONTRACTOR SHALL CLEAN ALL EXISTING DUCTWORK INCLUDING LINED DUCTWORK TO REMAIN PER SPECIFICATIONS. PRIOR TO BID AND BEFORE COMMENCEMENT OF ANY WORK ALL EXISTING DUCTWORK TO REMAIN SHALL BE CONFIRMED ON SITE.

NORTH

BUILDING C - DEMOLITION FLOOR PLAN | 1/8" = 1'-0" | 2

WLC ARCHITECTS
CLIENT FOCUSED • PASSION DRIVEN

SOUTHERN CALIFORNIA
8163 ROCHESTER AVENUE, SUITE 100
RANCHO CUCAMONGA
CALIFORNIA 91730-0729

TEL: 909-987-0909
www.wlcarchitects.com

LONGFELLOW ELEMENTARY SCHOOL HVAC REPLACEMENT

COMPTON UNIFIED SCHOOL DISTRICT
1101 S DWIGHT AVE.
COMPTON, CA 90220

MARK GRAHAM C-26046 03-31-19 — LICENSED ARCHITECT — STATE OF CALIFORNIA

ABBY BANDERAS No. M29253 Exp. 6/30/19 — REGISTERED PROFESSIONAL ENGINEER — MECHANICAL — STATE OF CALIFORNIA

CONSULTANT

IDENTIFICATION STAMP
DIV. OF THE STATE ARCHITECT
OFFICE OF REGULATION SERVICES
APPL 03-118423
AC — FLS — SS — EY
DATE MAR 0 6 2018
FILE: 19-23

NO	DATE	BY	DESCRIPTION
			REVISIONS

DRAWN: KC	CHECKED:
DATE: 3/6/2018	SCALE:
PROJECT NUMBER: 570064	

BUILDING C DEMO AND REMODEL FLOOR PLANS

DRAWING NUMBER: M-2.1

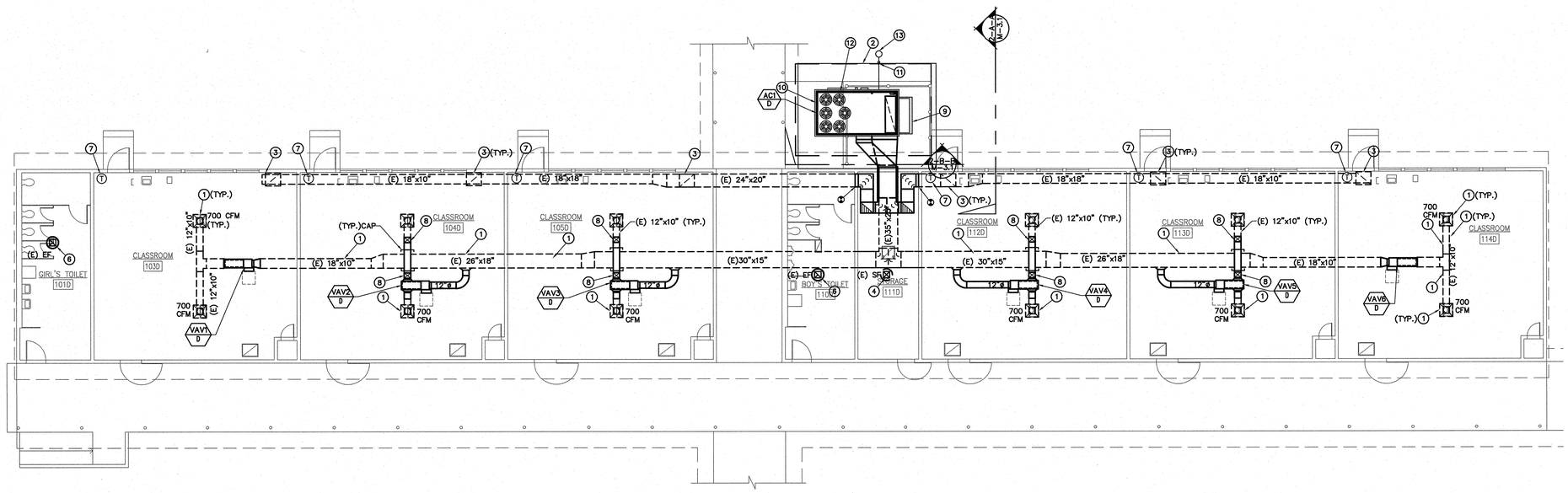

CONSTRUCTION KEY NOTES:

1. EXISTING MAIN SUPPLY DUCTWORK AND SUPPLY AIR DIFFUSERS TO REMAIN.SEE SHEET #2,#3, AND #4/M-4.1 FOR CEILING DIFFUSER AND DUCT SUPPORT DETAIL.
2. NEW FENCE AND CONCRETE PAD.
3. EXISTING MAIN RETURN DUCT AND GRILLES TO REMAIN.SEE SHEET #2,#3, AND #4/M-4.1 FOR CEILING DIFFUSER AND DUCT SUPPORT DETAIL.
4. EXISTING SUPPLY FAN AND DUCTWORK TO REMAIN.
5. CONTRACTOR TO USE M.W. SAUSSE & CO.,INC CURB AND CALCS. SEE SHEET M-4.4.
6. EXISTING EXHAUST FAN AND DUCTWORK TO REMAIN.
7. ELECTRONIC EMS THERMOSTAT MOUNT AT 48" A.F.F. SEE DETAIL SHEET #7/M-4.1 FOR A/C CONTROL.
8. CONTRACTOR TO OFFSET NEW (W) 12"X10" DUCT ABOVE MAIN SUPPLY DUCT.
9. POWER EXHAUST MOUNTED ON THE AC UNIT.
10. NEW AC UNIT AND CURB WILL BE ON CONCRETE PAD. SEE DETAIL SHEET # 9/M-4.1 FOR PAD.
11. ¾" CONDENSATE DRAIN TO DRYWELL. PROVIDE NEW VENTED P-TRAP IF NECESSARY.
12. CONTRACTOR TO PROVIDE EXTENSION ON GAS PIPING AS REQUIRED TO RECONNECT EXISTING GAS PIPING TO NEW AC UNIT.
12. NEW DRY WELL. SEE DETAIL SHEET #5/M-4.1.

CONSTRUCTION NOTES:

1. CONTRACTOR SHALL COORDINATE WORK WITH OTHER TRADES AS NECESSARY PRIOR TO INSTALLATION.
2. CONTRACTOR SHALL MAINTAIN PROPER CLEARANCES FROM ALL ELECTRICAL EQUIPMENT AND SERVICE CLEARANCES FOR MECHANICAL EQUIPMENT.
3. FRESH AIR INTAKES SHALL BE 10'-0" MIN. AWAY FROM ALL EXHAUST OUTLETS, PLUMBING VENTS, AND FLUES.
4. CONTRACTOR SHALL COORDINATE EXACT EQUIPMENT PAD SIZES AND LOCATIONS WITH OTHER TRADES PRIOR TO INSTALLATION.
5. MAINTAIN MANUFACTURER MIN. CLEARANCES ON ALL AC UNITS.
6. BEFORE BIDDING ON THIS WORK, THE CONTRACTOR SHALL MAKE A CAREFUL EXAMINATION OF THE PREMISES, EXISTING EQUIPMENT AND SERVICES. HE SHALL DEFINITELY DETERMINE IN ADVANCE, THE METHODS OF INSTALLING AND CONNECTING THE NEW EQUIPMENT, DUCTWORK, AND PIPING THE MEANS TO BE PROVIDED FOR GETTING THE EQUIPMENT AND MATERIALS INTO PLACE AND SHALL MAKE HIMSELF THOROUGHLY FAMILIAR WITH ALL OF THE REQUIREMENTS OF THE PROJECT. FAILURE TO VISIT THE SITE WILL IN NO WAY RELIEVE THE SUCCESSFUL CONTRACTOR OF THE NECESSITY OF FURNISHING ANY MATERIAL OR PERFORMING ANY WORK THAT MAY BE REQUIRED TO COMPLETE THE WORK IN ACCORDANCE WITH THE DRAWINGS AND SPECIFICATIONS. THIS ADDITIONAL WORK SHALL BE PERFORMED WITHOUT ADDITIONAL COST TO THE OWNER.
7. BEFORE COMMENCEMENT OF WORK, THE CONTRACTOR SHALL VERIFY THE EXACT LOCATIONS AND DIMENSIONS OF ALL EXISTING EQUIPMENT AND ELECTRICAL SERVICES IN THE AREA OF CONSTRUCTION AND NOTIFY THE ENGINEER OF ANY DISCREPANCIES.
8. ALL NEW EXPOSED SHEET METAL DUCTWORK, SHEET METAL CURB / PLATFORM AND DUCT SUPPORT SHALL BE PREPARED AND PAINTED PER DISTRICT STANDARDS.

NORTH

BUILDING D - REMODEL FLOOR PLAN | 1/8" = 1'-0" | 1

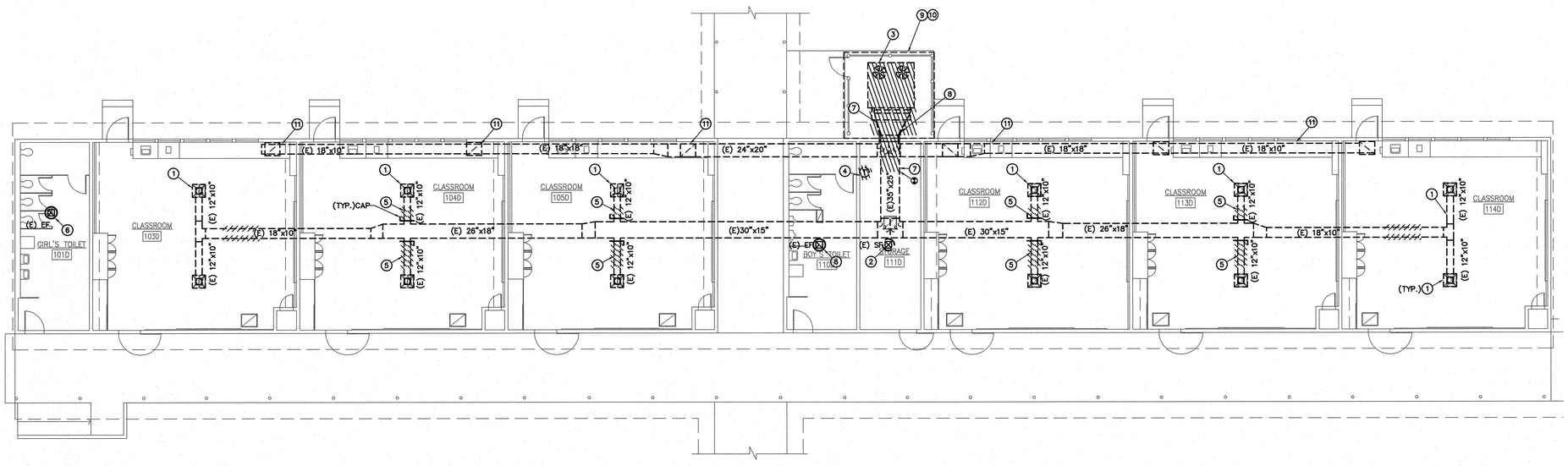

DEMOLITION KEY NOTES:

1. EXISTING MAIN SUPPLY DUCTWORK AND SUPPLY AIR DIFFUSERS TO REMAIN.
2. EXISTING SUPPLY FAN AND DUCTWORK TO REMAIN.
3. EXISTING AC UNIT, AC UNIT CURB AND RELATED ACCESSORIES TO BE REMOVED AND REPLACED WITH NEW AC UNIT.
4. EXISTING T-STAT TO BE REMOVED.
5. PARTIAL EXISTING SUPPLY AIR DUCT AND EXISTING MANUAL VOLUME DAMPER TO BE REMOVED. CAP UNUSED DUCT OPENING.
6. EXISTING EXHAUST FAN AND DUCTWORK TO REMAIN.
7. EXISTING 30"X25" MAIN SUPPLY AIR DUCT TO BE REMOVED AND REPLACED.
8. EXISTING 35"X25" RETURN DUCT TO BE REMOVED AND REPLACED.
9. EXISTING CONCRETE PAD TO BE REMOVED AND REPLACED WITH A NEW PAD.
10. EXISTING FENCE TO BE REMOVED AND REPLACED WITH A NEW FENCE AT A NEW LOCATION.
11. EXISTING MAIN RETURN DUCT AND AIR GRILLES TO REMAIN.

GENERAL DEMOLITION NOTES

1. OWNER SHALL HAVE FIRST RIGHT OF REFUSAL ON ALL ITEMS TO BE REMOVED.CONTRACTOR SHALL VERIFY ALL SUCH ITEMS WITH OWNER PRIOR TO REMOVAL. ALL ITEMS NOT REFUSED BY OWNER SHALL BE REMOVED INTACT AND FULLY FUNCTIONAL BY REFUSED BY OWNER SHALL BE PROPERLY DISPOSED OF BY CONTRACTOR.
2. CONTRACTOR SHALL RE-USE EXISTING OPENINGS IN WALLS AND ROOF WHEREVER POSSIBLE. COORDINATE WITH OTHER TRADES AS NECESSARY. GENERAL CONTRACTOR SHALL MODIFY OPENING AS REQUIRED TO ACCOMMODATE NEW MECHANICAL DEVICE.
3. GENERAL CONTRACTOR SHALL PATCH ALL OPENINGS IN WALLS, ROOF, ETC. THAT WILL NOT BE REUSED FOR FUTURE WORK. COORDINATE AS NECESSARY WITH OTHER TRADES.
4. CONTRACTOR SHALL COORDINATE WITH OWNER PRIOR TO ANY WORK BEING DONE STORAGE OF MECHANICAL EQUIPMENT TO BE RE-USED DURING CONSTRUCTION.
5. PRIOR TO ANY WORK BEING DONE CONTRACTOR SHALL MAKE A CAREFUL EVALUATION OF THE EXISTING CONDITIONS AND VERIFY ALL METHODS OF REMOVAL AND INSTALLATION OF MECHANICAL EQUIPMENT.
6. CONTRACTOR SHALL COORDINATE ALL DEMOLITION WORK WITH THE WORK OF ALL OTHER TRADES.
7. CONTRACTOR SHALL CLEAN ALL AIR DEVICES AND DUCTWORK TO REMAIN PER SPECIFICATIONS.
8. CONTRACTOR SHALL CLEAN ALL EXISTING DUCTWORK INCLUDING LINED DUCTWORK TO REMAIN PER SPECIFICATIONS. PRIOR TO BID AND BEFORE COMMENCEMENT OF ANY WORK ALL EXISTING DUCTWORK TO REMAIN SHALL BE CONFIRMED ON SITE.

NORTH

BUILDING D - DEMOLITION FLOOR PLAN | 1/8" = 1'-0" | 2

WLC ARCHITECTS
CLIENT FOCUSED • PASSION DRIVEN

SOUTHERN CALIFORNIA
8163 ROCHESTER AVENUE, SUITE 100
RANCHO CUCAMONGA
CALIFORNIA 91730-0729
TEL: 909-987-0909
www.wlcarchitects.com

LONGFELLOW ELEMENTARY SCHOOL HVAC REPLACEMENT

COMPTON UNIFIED SCHOOL DISTRICT
1101 S DWIGHT AVE.
COMPTON, CA 90220

LICENSED ARCHITECT — MARK GRAHAM — C-26046 — 03-31-19 — STATE OF CALIFORNIA

REGISTERED PROFESSIONAL ENGINEER — BRIAN BAMERAS — No. M29253 — Exp. 6/30/19 — MECHANICAL — STATE OF CALIFORNIA

CONSULTANT

FILE: 19-23

IDENTIFICATION STAMP
DIV. OF THE STATE ARCHITECT
OFFICE OF REGULATION SERVICES
APPL 03-118423
AC ___ FLS ___ SS IEY
DATE MAR 0 8 2018

NO	DATE	BY	DESCRIPTION
1			REVISIONS

DRAWN: KC	CHECKED:
DATE: 3/6/2018	SCALE:
PROJECT NUMBER: 570064	

BUILDING D DEMO AND REMODEL FLOOR PLANS

DRAWING NUMBER: M-2.2

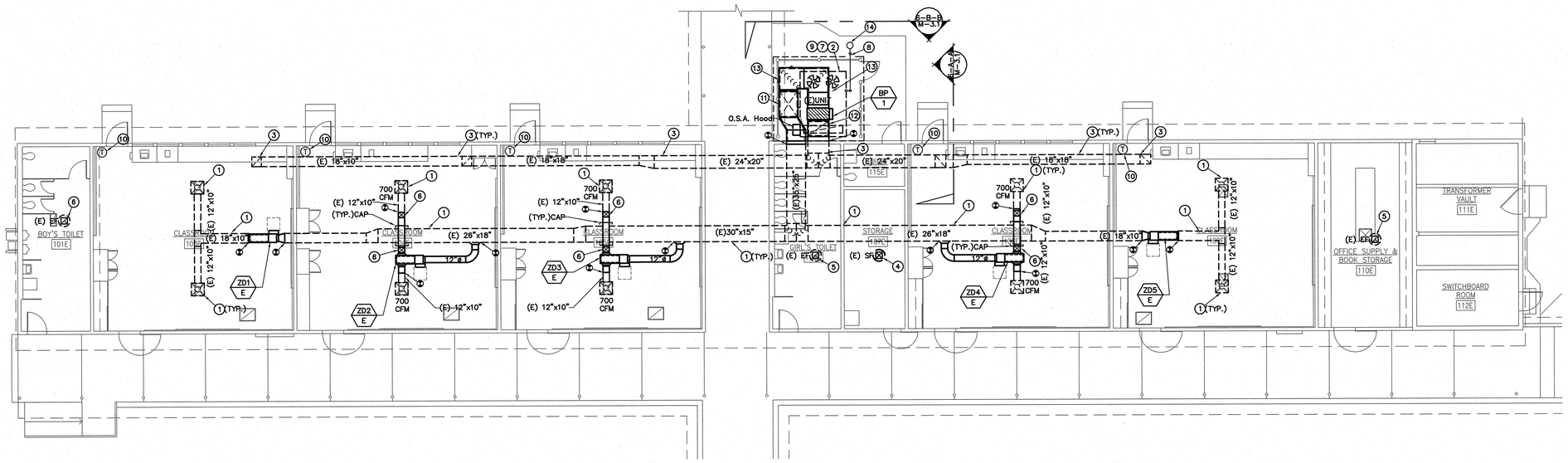

BUILDING E - REMODEL FLOOR PLAN | 1/8" = 1'-0" | 1

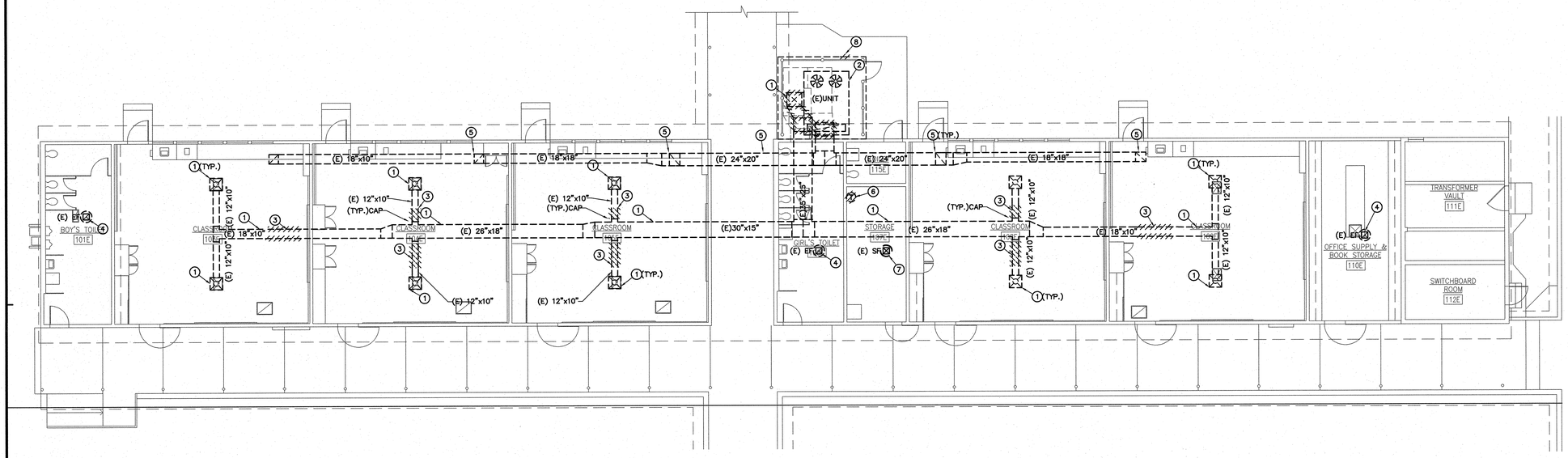

BUILDING E - DEMOLITION FLOOR PLAN | 1/8" = 1'-0" | 2

CONSTRUCTION KEY NOTES:

1. EXISTING MAIN SUPPLY DUCTWORK AND SUPPLY AIR DIFFUSERS TO REMAIN.SEE SHEET #2,#3, AND #4/M-4.1 FOR CEILING DIFFUSER AND DUCT SUPPORT DETAIL.
2. EXISTING UNIT TO REMIAN
3. EXISTING MAIN RETURN DUCT AND GRILLES TO REMAIN.SEE SHEET #2,#3, AND #4/M-4.1 FOR CEILING DIFFUSER AND DUCT SUPPORT DETAIL.
4. EXISTING SUPPLY FAN AND DUCTWORK TO REMAIN.
5. EXISTING EXHAUST FAN AND DUCTWORK TO REMAIN.
6. CONTRACTOR TO OFFSET NEW (W) 12"x10" DUCT ABOVE MAIN SUPPLY DUCT.
7. CONTRACTOR TO PROVIDE EXTENSION ON GAS PIPING TO EXISTING .
8. CONTRACTOR TO PROVIDE AN EXTENSION ON CONDENSATE PIPING TO DRYWELL. PROVIDE NEW VENTED P-TRAP WHERE NECESSARY.
9. CONTRACTOR TO PROVIDE O.S.A. AND RETURN DAMPER IF EXISTING UNIT DOES NOT HAVE ONE.
10. ELECTRONIC EMS THERMOSTAT MOUNT AT 48" A.F.F. SEE DETAIL SHEET #7/M-4.1 FOR A/C CONTROL.
11. NEW 36"x28" (L) 40"x32" SUPPLY DUCT. CONTRACTOR TO PROVIDE CONNECTION TO EXISTING SUPPLY DUCT.
12. NEW 36"x28" (L) 40"x30" SUPPLY DUCT.
13. NEW 36"x12" (L) 40"x16" DUCT TO BE DUCTED TO BYPASS DAMPER AND SUPPLY DUCT.
14. NEW DRYWELL. SEE DETAIL SHEET #5/M-4.1.

CONSTRUCTION NOTES:

1. CONTRACTOR SHALL COORDINATE WORK WITH OTHER TRADES AS NECESSARY PRIOR TO INSTALLATION.
2. CONTRACTOR SHALL MAINTAIN PROPER CLEARANCES FROM ALL ELECTRICAL EQUIPMENT AND SERVICE CLEARANCES FOR MECHANICAL EQUIPMENT.
4. FRESH AIR INTAKES SHALL BE 10'-0" MIN. AWAY FROM ALL EXHAUST OUTLETS, PLUMBING VENTS, AND FLUES.
5. CONTRACTOR SHALL COORDINATE EXACT EQUIPMENT PAD SIZES AND LOCATIONS WITH OTHER TRADES PRIOR TO INSTALLATION.
6. MAINTAIN MANUFACTURER MIN. CLEARANCES ON ALL AC UNITS.
7. BEFORE BIDDING ON THIS WORK, THE CONTRACTOR SHALL MAKE A CAREFUL EXAMINATION OF THE PREMISES, EXISTING EQUIPMENT AND SERVICES. HE SHALL DEFINITELY DETERMINE IN ADVANCE, THE METHODS OF INSTALLING AND CONNECTING THE NEW EQUIPMENT, DUCTWORK, AND PIPING THE MEANS TO BE PROVIDED FOR GETTING THE EQUIPMENT AND MATERIALS INTO PLACE AND SHALL MAKE HIMSELF THOROUGHLY FAMILIAR WITH ALL OF THE REQUIREMENTS OF THE PROJECT. FAILURE TO VISIT THE SITE WILL IN NO WAY RELIEVE THE SUCCESSFUL CONTRACTOR OF THE NECESSITY OF FURNISHING ANY MATERIAL OR PERFORMING ANY WORK THAT MAY BE REQUIRED TO COMPLETE THE WORK IN ACCORDANCE WITH THE DRAWINGS AND SPECIFICATIONS. THIS ADDITIONAL WORK SHALL BE PERFORMED WITHOUT ADDITIONAL COST TO THE OWNER.
8. BEFORE COMMENCEMENT OF WORK, THE CONTRACTOR SHALL VERIFY THE EXACT LOCATIONS AND DIMENSIONS OF ALL EXISTING EQUIPMENT AND ELECTRICAL SERVICES IN THE AREA OF CONSTRUCTION AND NOTIFY THE ENGINEER OF ANY DISCREPANCIES.
9. ALL NEW EXPOSED SHEET METAL DUCTWORK, SHEET METAL CURB / PLATFORM AND DUCT SUPPORT SHALL BE PREPARED AND PAINTED PER DISTRICT STANDARDS.

NORTH

DEMOLITION KEY NOTES:

1. EXISTING MAIN SUPPLY DUCTWORK AND SUPPLY AIR DIFFUSERS TO REMAIN.
2. EXISTING AC UNIT, AC UNIT CURB AND RELATED ACCESSORIES TO REMAIN.
3. PARTIAL EXISTING SUPPLY AIR DUCT AND EXISTING MANUAL VOLUME DAMPER TO BE REMOVED. CAP UNUSED DUCT OPENING.
4. EXISTING EXHAUST FAN AND DUCTWORK TO REMAIN.
5. EXISTING MAIN RETURN DUCT AND AIR GRILLES TO REMAIN.
6. EXISTING TSTAT TO BE REMOVED.
7. EXISTING SUPPLY FAN AND DUCTWORK TO REMAIN.
8. PORTION OF EXISTING UNIT PAD TO BE DEMO FOR CONDENSATE ROUTING TO DRYWELL.

GENERAL DEMOLITION NOTES

1. OWNER SHALL HAVE FIRST RIGHT OF REFUSAL ON ALL ITEMS TO BE REMOVED.CONTRACTOR SHALL VERIFY ALL SUCH ITEMS WITH OWNER PRIOR TO REMOVAL. ALL ITEMS NOT REFUSED BY OWNER SHALL BE REMOVED INTACT AND FULLY FUNCTIONAL BY REFUSED BY OWNER SHALL BE PROPERLY DISPOSED OF BY CONTRACTOR.
2. CONTRACTOR SHALL RE-USE EXISTING OPENINGS IN WALLS AND ROOF WHEREVER POSSIBLE. COORDINATE WITH OTHER TRADES AS NECESSARY. GENERAL CONTRACTOR SHALL MODIFY OPENING AS REQUIRED TO ACCOMMODATE NEW MECHANICAL DEVICE.
3. GENERAL CONTRACTOR SHALL PATCH ALL OPENINGS IN WALLS, ROOF, ETC. THAT WILL NOT BE REUSED FOR FUTURE WORK. COORDINATE AS NECESSARY WITH OTHER TRADES.
4. CONTRACTOR SHALL COORDINATE WITH OWNER PRIOR TO ANY WORK BEING DONE STORAGE OF MECHANICAL EQUIPMENT TO BE RE-USED DURING CONSTRUCTION.
5. PRIOR TO ANY WORK BEING DONE CONTRACTOR SHALL MAKE A CAREFUL EVALUATION OF THE EXISTING CONDITIONS AND VERIFY ALL METHODS OF REMOVAL AND INSTALLATION OF MECHANICAL EQUIPMENT.
6. CONTRACTOR SHALL COORDINATE ALL DEMOLITION WORK WITH THE WORK OF ALL OTHER TRADES.
7. CONTRACTOR SHALL CLEAN ALL AIR DEVICES AND DUCTWORK TO REMAIN PER SPECIFICATIONS.
8. CONTRACTOR SHALL CLEAN ALL EXISTING DUCTWORK INCLUDING LINED DUCTWORK TO REMAIN PER SPECIFICATIONS. PRIOR TO BID AND BEFORE COMMENCEMENT OF ANY WORK ALL EXISTING DUCTWORK TO REMAIN SHALL BE CONFIRMED ON SITE.

NORTH

WLC ARCHITECTS
CLIENT FOCUSED • PASSION DRIVEN

SOUTHERN CALIFORNIA
8163 ROCHESTER AVENUE, SUITE 100
RANCHO CUCAMONGA
CALIFORNIA 91730-0729
TEL: 909-987-0909
www.wlcarchitects.com

LONGFELLOW ELEMENTARY SCHOOL HVAC REPLACEMENT

COMPTON UNIFIED SCHOOL DISTRICT
1101 S DWIGHT AVE.
COMPTON, CA 90220

LICENSED ARCHITECT MARK GRAHAM C-26046 03-31-19 STATE OF CALIFORNIA

REGISTERED PROFESSIONAL ENGINEER JEFF BAKER No. M29253 Exp. 6/30/19 MECHANICAL STATE OF CALIFORNIA

CONSULTANT

IDENTIFICATION STAMP DIV. OF THE STATE ARCHITECT OFFICE OF REGULATION SERVICES
APPL 03-118423
AC FLS SS EY
DATE NOV 0 2018
FILE: 19-23

NO	DATE	BY	DESCRIPTION
			REVISIONS

DRAWN: KC	CHECKED:
DATE: 3/6/2018	SCALE:
PROJECT NUMBER: 570064	

BUILDING E DEMO AND REMODEL FLOOR PLANS

DRAWING NUMBER: M-2.3

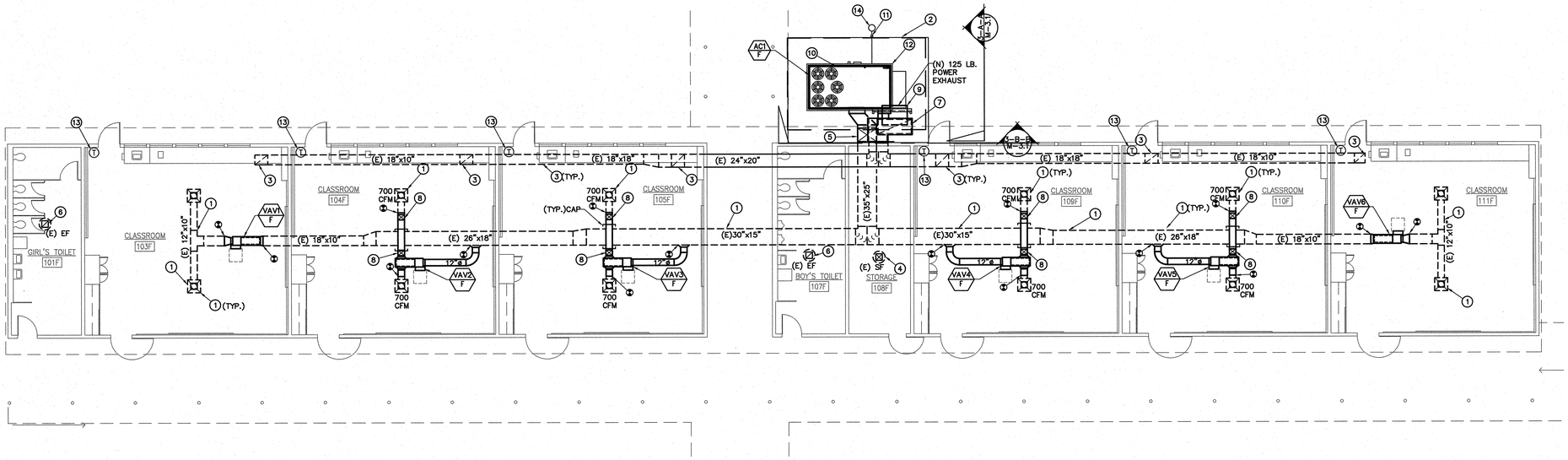

CONSTRUCTION KEY NOTES:

1. EXISTING MAIN SUPPLY DUCTWORK AND SUPPLY AIR DIFFUSERS TO REMAIN.SEE SHEET #2,#3, AND #4/M-4.1 FOR CEILING DIFFUSER AND DUCT SUPPORT DETAIL.
2. NEW FENCE AND CONCRETE PAD.
3. EXISTING MAIN RETURN DUCT AND GRILLES TO REMAIN.SEE SHEET #2,#3, AND #4/M-4.1 FOR CEILING DIFFUSER AND DUCT SUPPORT DETAIL.
4. EXISTING SUPPLY FAN AND DUCTWORK TO REMAIN.
5. NEW 35"X25"(L) SUPPLY AIR DUCT. 40"X28" SHEET METAL SIZES. SEE STRUCTURAL SHEET #1/S2.1.
6. EXISTING EXHAUST FAN AND DUCTWORK TO REMAIN.
7. NEW 60"X26"(L) RETURN AIR DUCT. 64"X30" SHEET METAL SIZES. SEE STRUCTURAL SHEET #1/S2.1.
8. CONTRACTOR TO OFFSET NEW (W) 12"X10" DUCT ABOVE MAIN SUPPLY DUCT.
9. POWER EXHAUST MOUNTED ON THE NEW RETURN DUCT. SEE STRUCTURAL SHEET #1/S2.1.
10. NEW AC UNIT WILL BE ON CONCRETE PAD. SEE DETAIL SHEET #10/M-4.1 FOR PAD.
11. 3/4" CONDENSATE DRAIN TO DRYWELL. PROVIDE NEW VENTED P-TRAP IF NECESSARY.
12. CONTRACTOR TO PROVIDE EXTENSION ON GAS PIPING AS REQUIRED TO RECONNECT EXISTING GAS PIPING TO NEW AC UNIT.
13. ELECTRONIC EMS THERMOSTAT MOUNT AT 48" A.F.F. SEE DETAIL SHEET #7/M-4.1 FOR A/C CONTROL.
14. NEW DRY WELL. SEE DETAIL SHEET #5/M-4.1.

CONSTRUCTION NOTES:

1. CONTRACTOR SHALL COORDINATE WORK WITH OTHER TRADES AS NECESSARY PRIOR TO INSTALLATION.
2. CONTRACTOR SHALL MAINTAIN PROPER CLEARANCES FROM ALL ELECTRICAL EQUIPMENT AND SERVICE CLEARANCES FOR MECHANICAL EQUIPMENT.
4. FRESH AIR INTAKES SHALL BE 10'-0" MIN. AWAY FROM ALL EXHAUST OUTLETS, PLUMBING VENTS, AND FLUES.
5. CONTRACTOR SHALL COORDINATE EXACT EQUIPMENT PAD SIZES AND LOCATIONS WITH OTHER TRADES PRIOR TO INSTALLATION.
6. MAINTAIN MANUFACTURER MIN. CLEARANCES ON ALL AC UNITS.
7. BEFORE BIDDING ON THIS WORK, THE CONTRACTOR SHALL MAKE A CAREFUL EXAMINATION OF THE PREMISES, EXISTING EQUIPMENT AND SERVICES. HE SHALL DEFINITELY DETERMINE IN ADVANCE, THE METHODS OF INSTALLING AND CONNECTING THE NEW EQUIPMENT, DUCTWORK, AND PIPING THE MEANS TO BE PROVIDED FOR GETTING THE EQUIPMENT AND MATERIALS INTO PLACE AND SHALL MAKE HIMSELF THOROUGHLY FAMILIAR WITH ALL OF THE REQUIREMENTS OF THE PROJECT. FAILURE TO VISIT THE SITE WILL IN NO WAY RELIEVE THE SUCCESSFUL CONTRACTOR OF THE NECESSITY OF FURNISHING ANY MATERIAL OR PERFORMING ANY WORK THAT MAY BE REQUIRED TO COMPLETE THE WORK IN ACCORDANCE WITH THE DRAWINGS AND SPECIFICATIONS. THIS ADDITIONAL WORK SHALL BE PERFORMED WITHOUT ADDITIONAL COST TO THE OWNER.
8. BEFORE COMMENCEMENT OF WORK, THE CONTRACTOR SHALL VERIFY THE EXACT LOCATIONS AND DIMENSIONS OF ALL EXISTING EQUIPMENT AND ELECTRICAL SERVICES IN THE AREA OF CONSTRUCTION AND NOTIFY THE ENGINEER OF ANY DISCREPANCIES.
9. ALL NEW EXPOSED SHEET METAL DUCTWORK, SHEET METAL CURB / PLATFORM AND DUCT SUPPORT SHALL BE PREPARED AND PAINTED PER DISTRICT STANDARDS.

NORTH

BUILDING F - REMODEL FLOOR PLAN | 1/8" = 1'-0" | 1

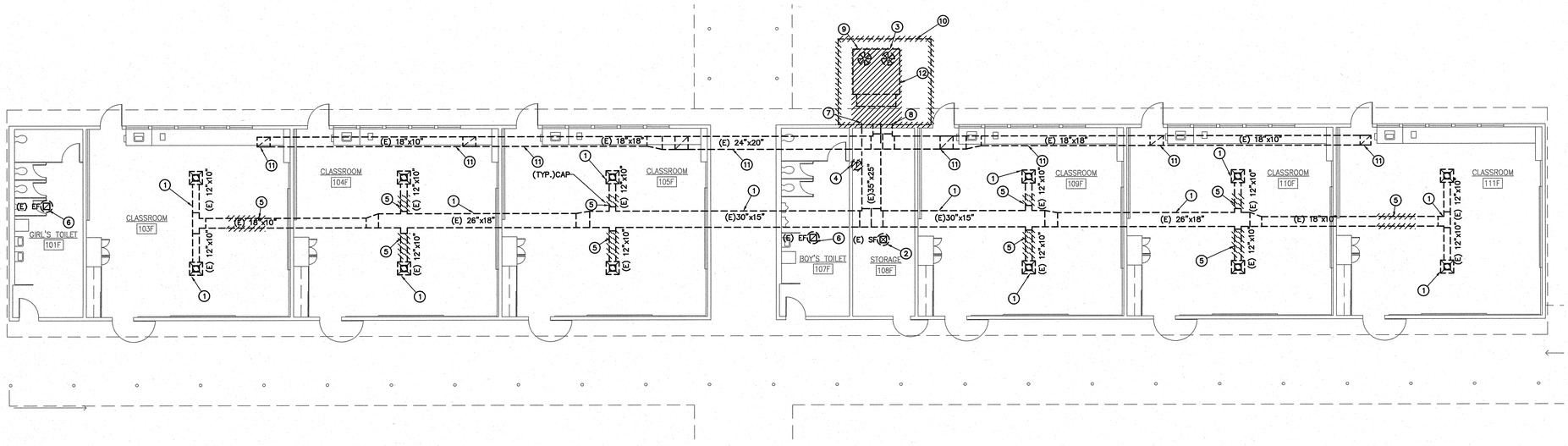

DEMOLITION KEY NOTES:

1. EXISTING MAIN SUPPLY DUCTWORK AND SUPPLY AIR DIFFUSERS TO REMAIN.
2. EXISTING SUPPLY FAN AND DUCTWORK TO REMAIN.
3. EXISTING AC UNIT, AC UNIT CURB AND RELATED ACCESSORIES TO BE REMOVED AND REPLACED WITH NEW AC UNIT.
4. EXISTING T-STAT TO BE REMOVED.
5. PARTIAL EXISTING SUPPLY AIR DUCT AND EXISTING MANUAL VOLUME DAMPER TO BE REMOVED. CAP UNUSED DUCT OPENING.
6. EXISTING EXHAUST FAN AND DUCTWORK TO REMAIN.
7. EXISTING 30"X25" MAIN SUPPLY AIR DUCT TO BE REMOVED AND REPLACED.
8. EXISTING 35"X25" RETURN DUCT TO BE REMOVED AND REPLACED.
9. EXISTING CONCRETE PAD TO BE REMOVED AND REPLACED WITH A NEW PAD.
10. EXISTING FENCE TO BE REMOVED AND REPLACED WITH A NEW FENCE AT A NEW LOCATION.
11. EXISTING MAIN RETURN DUCT AND AIR GRILLES TO REMAIN.
12. EXISTING AC UNIT CURB AND RELATED ACCESSORIES TO BE REMOVED AND REPLACED WITH NEW.

GENERAL DEMOLITION NOTES

1. OWNER SHALL HAVE FIRST RIGHT OF REFUSAL ON ALL ITEMS TO BE REMOVED.CONTRACTOR SHALL VERIFY ALL SUCH ITEMS WITH OWNER PRIOR TO REMOVAL. ALL ITEMS NOT REFUSED BY OWNER SHALL BE REMOVED INTACT AND FULLY FUNCTIONAL BY REFUSED BY OWNER SHALL BE PROPERLY DISPOSED OF BY CONTRACTOR.
2. CONTRACTOR SHALL RE-USE EXISTING OPENINGS IN WALLS AND ROOF WHEREVER POSSIBLE. COORDINATE WITH OTHER TRADES AS NECESSARY. GENERAL CONTRACTOR SHALL MODIFY OPENING AS REQUIRED TO ACCOMMODATE NEW MECHANICAL DEVICE.
3. GENERAL CONTRACTOR SHALL PATCH ALL OPENINGS IN WALLS, ROOF, ETC. THAT WILL NOT BE REUSED FOR FUTURE WORK. COORDINATE AS NECESSARY WITH OTHER TRADES.
4. CONTRACTOR SHALL COORDINATE WITH OWNER PRIOR TO ANY WORK BEING DONE STORAGE OF MECHANICAL EQUIPMENT TO BE RE-USED DURING CONSTRUCTION.
5. PRIOR TO ANY WORK BEING DONE CONTRACTOR SHALL MAKE A CAREFUL EVALUATION OF THE EXISTING CONDITIONS AND VERIFY ALL METHODS OF REMOVAL AND INSTALLATION OF MECHANICAL EQUIPMENT.
6. CONTRACTOR SHALL COORDINATE ALL DEMOLITION WORK WITH THE WORK OF ALL OTHER TRADES.
7. CONTRACTOR SHALL CLEAN ALL AIR DEVICES AND DUCTWORK TO REMAIN PER SPECIFICATIONS.
8. CONTRACTOR SHALL CLEAN ALL EXISTING DUCTWORK INCLUDING LINED DUCTWORK TO REMAIN PER SPECIFICATIONS. PRIOR TO BID AND BEFORE COMMENCEMENT OF ANY WORK ALL EXISTING DUCTWORK TO REMAIN SHALL BE CONFIRMED ON SITE.

NORTH

BUILDING F - DEMOLITION FLOOR PLAN | 1/8" = 1'-0" | 2

ARCHITECTS
WLC
CLIENT FOCUSED • PASSION DRIVEN

SOUTHERN CALIFORNIA
8163 ROCHESTER AVENUE, SUITE 100
RANCHO CUCAMONGA
CALIFORNIA 91730-0729

TEL: 909-987-0909
www.wlcarchitects.com

LONGFELLOW ELEMENTARY SCHOOL HVAC REPLACEMENT

COMPTON UNIFIED SCHOOL DISTRICT
1101 S DWIGHT AVE.
COMPTON, CA 90220

LICENSED ARCHITECT MARK GRAHAM C-26046 03-31-19 STATE OF CALIFORNIA

REGISTERED PROFESSIONAL ENGINEER BAKERJIAN No. M28253 Exp. 6/30/19 MECHANICAL STATE OF CALIFORNIA

CONSULTANT

IDENTIFICATION STAMP DIV. OF THE STATE ARCHITECT OFFICE OF REGULATION SERVICES
APPL 03-118423
AC — FLS — SS — EY
DATE MAY 0 9 2019
FILE: 19-23

NO	DATE	BY	DESCRIPTION
1			REVISIONS

DRAWN: KC	CHECKED:
DATE: 3/6/2018	SCALE:
PROJECT NUMBER: 570064	

BUILDING F DEMO AND REMODEL FLOOR PLANS

DRAWING NUMBER: M-2.4

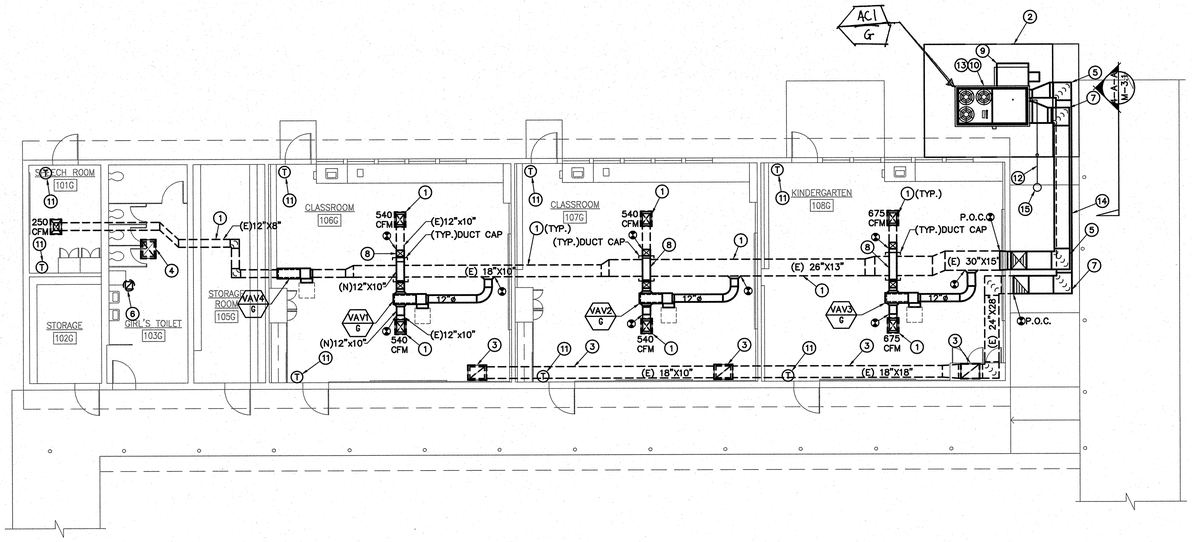

CONSTRUCTION KEY NOTES:

1. EXISTING MAIN SUPPLY DUCTWORK AND SUPPLY AIR DIFFUSERS TO REMAIN.SEE SHEET #2,#3, AND #4/M-4.1 FOR CEILING DIFFUSER AND DUCT SUPPORT DETAIL.
2. NEW FENCE AND CONCRETE PAD. SEE ARCHITECT SHEET FOR MORE DETAILS.
3. EXISTING MAIN RETURN DUCT AND GRILLES TO REMAIN.SEE SHEET #2,#3, AND #4/M-4.1 FOR CEILING DIFFUSER AND DUCT SUPPORT DETAIL.
4. EXISTING MAKE UP AIR HOOD AND DUCTWORK TO REMAIN.
5. NEW 24"X20"(L) SUPPLY AIR DUCT ON TOP. 28"X24" SHEET METAL SIZES. SEE STRUCTURAL SHEET DETAIL #3/S2.1 FOR DUCT SUPPORT.
6. EXISTING EXHAUST FAN AND DUCTWORK TO REMAIN.
7. NEW 24"X20"(L) RETURN AIR DUCT ON BOTTOM. 28"X24" SHEET METAL SIZES. SEE STRUCTURAL SHEET DETAIL #3/S2.1 FOR DUCT SUPPORT.
8. CONTRACTOR TO OFFSET NEW (W) 12"X10" DUCT ABOVE MAIN EXISTING SUPPLY DUCT.
9. POWER EXHAUST MOUNTED ON THE AC UNIT.
10. AC UNIT WILL BE ON 14" FACTORY CURB FOR POWER EXHAUST. SEE SCHEDULE SHEET M-0.2 AC UNIT SCHEDULE REMARK # 6 FOR CURB.
11. ELECTRONIC EMS THERMOSTAT MOUNT AT 48" A.F.F. SEE DETAIL SHEET #7/M-4.1 FOR A/C CONTROL.
12. 3/4" CONDENSATE DRAIN TO DRY WELL. PROVIDE NEW VENTED P-TRAP IF NECESSARY.
13. CONTRACTOR TO PROVIDE EXTENSION ON GAS AND CONDENSATE PIPING TO NEW AC UNITS.
14. SEE STRUCTURAL SHEET DETAIL #3/S2.1 FOR DUCT SUPPORT.
15. NEW DRY WELL. SEE DETAIL SHEET #5/M-4.1.

CONSTRUCTION NOTES:

1. CONTRACTOR SHALL COORDINATE WORK WITH OTHER TRADES AS NECESSARY PRIOR TO INSTALLATION.
2. CONTRACTOR SHALL MAINTAIN PROPER CLEARANCES FROM ALL ELECTRICAL EQUIPMENT AND SERVICE CLEARANCES FOR MECHANICAL EQUIPMENT.
3. FRESH AIR INTAKES SHALL BE 10'-0" MIN. AWAY FROM ALL EXHAUST OUTLETS, PLUMBING VENTS, AND FLUES.
4. CONTRACTOR SHALL COORDINATE EXACT EQUIPMENT PAD SIZES AND LOCATIONS WITH OTHER TRADES PRIOR TO INSTALLATION.
5. MAINTAIN MANUFACTURER MIN. CLEARANCES ON ALL AC UNITS.
6. BEFORE BIDDING ON THIS WORK, THE CONTRACTOR SHALL MAKE A CAREFUL EXAMINATION OF THE PREMISES, EXISTING EQUIPMENT AND SERVICES. HE SHALL DEFINITELY DETERMINE IN ADVANCE, THE METHODS OF INSTALLING AND CONNECTING THE NEW EQUIPMENT, DUCTWORK, AND PIPING THE MEANS TO BE PROVIDED FOR GETTING THE EQUIPMENT AND MATERIALS INTO PLACE AND SHALL MAKE HIMSELF THOROUGHLY FAMILIAR WITH ALL OF THE REQUIREMENTS OF THE PROJECT. FAILURE TO VISIT THE SITE WILL IN NO WAY RELIEVE THE SUCCESSFUL CONTRACTOR OF THE NECESSITY OF FURNISHING ANY MATERIAL OR PERFORMING ANY WORK THAT MAY BE REQUIRED TO COMPLETE THE WORK IN ACCORDANCE WITH THE DRAWINGS AND SPECIFICATIONS. THIS ADDITIONAL WORK SHALL BE PERFORMED WITHOUT ADDITIONAL COST TO THE OWNER.
7. BEFORE COMMENCEMENT OF WORK, THE CONTRACTOR SHALL VERIFY THE EXACT LOCATIONS AND DIMENSIONS OF ALL EXISTING EQUIPMENT AND ELECTRICAL SERVICES IN THE AREA OF CONSTRUCTION AND NOTIFY THE ENGINEER OF ANY DISCREPANCIES.
8. ALL NEW EXPOSED SHEET METAL DUCTWORK, SHEET METAL CURB / PLATFORM AND DUCT SUPPORT SHALL BE PREPARED AND PAINTED PER DISTRICT STANDARDS.

NORTH

BUILDING G - REMODEL FLOOR PLAN | 1/8" = 1'-0" | 1

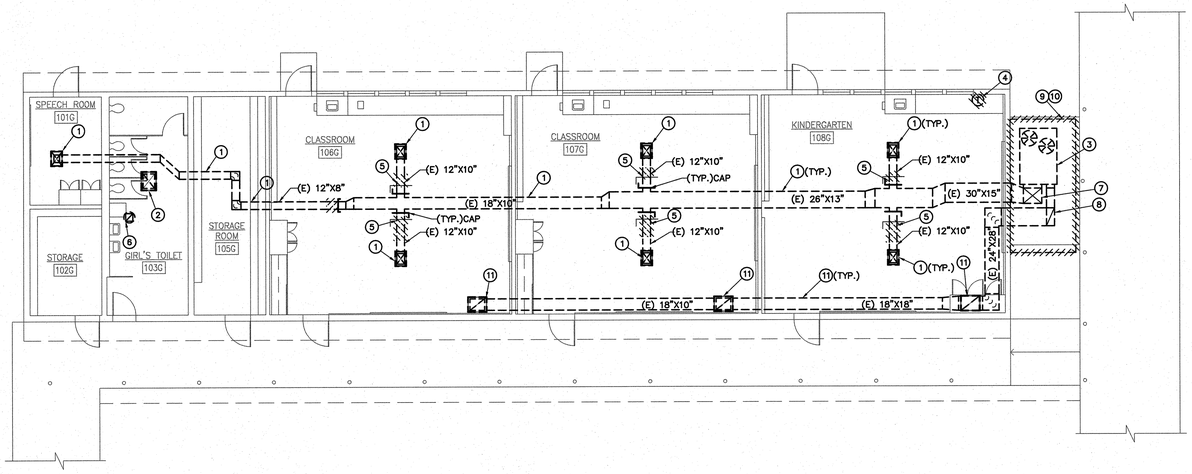

DEMOLITION KEY NOTES:

1. EXISTING MAIN SUPPLY DUCTWORK AND SUPPLY AIR DIFFUSERS TO REMAIN.
2. EXISTING MAKE UP AIR HOOD AND DUCTWORK TO REMAIN.
3. EXISTING AC UNIT, AC UNIT CURB AND RELATED ACCESSORIES TO BE REMOVED AND REPLACED WITH NEW AC UNIT.
4. EXISTING T-STAT TO BE REMOVED.
5. PARTIAL EXISTING SUPPLY AIR DUCT AND EXISTING MANUAL VOLUME DAMPER TO BE REMOVED. CAP UNUSED DUCT OPENING.
6. EXISTING EXHAUST FAN AND DUCTWORK TO REMAIN.
7. EXISTING 30"X15"(L) MAIN SUPPLY AIR DUCT TO BE REMOVED AND REPLACED.
8. EXISTING 24"X28" (L) RETURN DUCT TO BE REMOVED AND REPLACED.
9. EXISTING CONCRETE PAD TO BE REMOVED AND REPLACED WITH A NEW PAD.
10. EXISTING FENCE TO BE REMOVED AND REPLACED WITH A NEW FENCE. SEE ARCHITECT SHEET FOR MORE DETAILS.
11. EXISTING MAIN RETURN DUCT AND AIR GRILLES TO REMAIN.

GENERAL DEMOLITION NOTES

1. OWNER SHALL HAVE FIRST RIGHT OF REFUSAL ON ALL ITEMS TO BE REMOVED.CONTRACTOR SHALL VERIFY ALL SUCH ITEMS WITH OWNER PRIOR TO REMOVAL. ALL ITEMS NOT REFUSED BY OWNER SHALL BE REMOVED INTACT AND FULLY FUNCTIONAL BY REFUSED BY OWNER SHALL BE PROPERLY DISPOSED OF BY CONTRACTOR.
2. CONTRACTOR SHALL RE-USE EXISTING OPENINGS IN WALLS AND ROOF WHEREVER POSSIBLE. COORDINATE WITH OTHER TRADES AS NECESSARY. GENERAL CONTRACTOR SHALL MODIFY OPENING AS REQUIRED TO ACCOMMODATE NEW MECHANICAL DEVICE.
3. GENERAL CONTRACTOR SHALL PATCH ALL OPENINGS IN WALLS, ROOF, ETC. THAT WILL NOT BE REUSED FOR FUTURE WORK. COORDINATE AS NECESSARY WITH OTHER TRADES.
4. PRIOR TO ANY WORK BEING DONE CONTRACTOR SHALL MAKE A CAREFUL EVALUATION OF THE EXISTING CONDITIONS AND VERIFY ALL METHODS OF REMOVAL AND INSTALLATION OF MECHANICAL EQUIPMENT.
5. CONTRACTOR SHALL COORDINATE ALL DEMOLITION WORK WITH THE WORK OF ALL OTHER TRADES.
6. CONTRACTOR SHALL CLEAN ALL AIR DEVICES AND DUCTWORK TO REMAIN PER SPECIFICATIONS.
7. CONTRACTOR SHALL CLEAN ALL EXISTING DUCTWORK INCLUDING LINED DUCTWORK TO REMAIN PER SPECIFICATIONS. PRIOR TO BID AND BEFORE COMMENCEMENT OF ANY WORK ALL EXISTING DUCTWORK TO REMAIN SHALL BE CONFIRMED ON SITE.

NORTH

BUILDING G - DEMOLITION FLOOR PLAN | 1/8" = 1'-0" | 2

WLC ARCHITECTS
CLIENT FOCUSED • PASSION DRIVEN
SOUTHERN CALIFORNIA
8163 ROCHESTER AVENUE, SUITE 100
RANCHO CUCAMONGA
CALIFORNIA 91730-0729
TEL: 909-987-0909
www.wlcarchitects.com

LONGFELLOW ELEMENTARY SCHOOL HVAC REPLACEMENT

COMPTON UNIFIED SCHOOL DISTRICT
1101 S DWIGHT AVE.
COMPTON, CA 90220

LICENSED ARCHITECT MARK GRAHAM C-26546 03-31-19 STATE OF CALIFORNIA
REGISTERED PROFESSIONAL ENGINEER JAMES BARFIELD No. M29253 Exp. 6/30/19 MECHANICAL STATE OF CALIFORNIA

CONSULTANT

IDENTIFICATION STAMP DIV. OF THE STATE ARCHITECT OFFICE OF REGULATION SERVICES
APPL 03-118423
AC FLS SS EY
DATE MAR 05 2018
FILE: 19-23

NO	DATE	BY	DESCRIPTION
1			REVISIONS

DRAWN: KC | CHECKED:
DATE: 3/6/2018 | SCALE:
PROJECT NUMBER: 570064

BUILDING G DEMO AND REMODEL FLOOR PLANS

DRAWING NUMBER: M-2.5

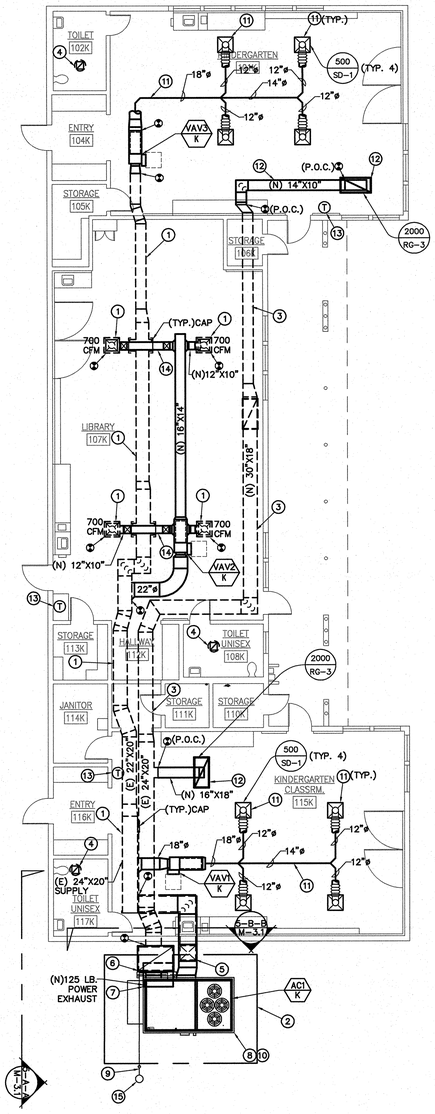

CONSTRUCTION KEY NOTES:

1. EXISTING MAIN SUPPLY DUCTWORK AND SUPPLY AIR DIFFUSERS TO REMAIN. SEE SHEET #2,#3, AND #4/M-4.1 FOR CEILING DIFFUSER AND DUCT SUPPORT DETAIL.
2. NEW FENCE AND CONCRETE PAD.
3. EXISTING MAIN RETURN DUCT AND GRILLES TO REMAIN.SEE SHEET #2,#3, AND #4/M-4.1 FOR CEILING DIFFUSER AND DUCT SUPPORT DETAIL.
4. EXISTING EXHAUST FAN AND DUCTWORK TO REMAIN.
5. NEW 24"X22"(L) SUPPLY AIR DUCT. 28"X26" SHEET METAL SIZES. SEE STRUCTURAL DETAIL SHEET #4/S2.1.
6. NEW 52"X36"(L) RETURN AIR DUCT. 56"X40" SHEET METAL SIZES. SEE STRUCTURAL DETAIL SHEET #4/S2.1.
7. POWER EXHAUST MOUNTED ON THE NEW RETURN DUCT. SEE STRUCTURAL DETAIL SHEET #4/S2.1.
8. NEW AC UNIT WILL BE ON CONCRETE PAD. SEE DETAIL SHEET 10/M-4.1 FOR PAD.
9. ¾" CONDENSATE DRAIN TO CONNECT TO NEW DRY WELL. PROVIDE NEW VENTED P-TRAP IF NECESSARY.
10. CONTRACTOR TO PROVIDE EXTENSION ON GAS AND CONDENSATE PIPING TO EXISTING . PROVIDE NEW VENTED P-TRAP WHERE NECESSARY.
11. NEW SUPPLY AIR DUCT AND DIFFUSER TO REPLACE EXISTING.SEE SHEET #2,#3, AND #4/M-4.1 FOR CEILING DIFFUSER AND DUCT SUPPORT DETAIL.
12. NEW RETURN DUCT AND GRILLE TO REPLACE EXISTING. SEE MECHANICAL DETAIL SHEET #4/M-4.1.
13. ELECTRONIC EMS THERMOSTAT MOUNT AT 48" A.F.F. SEE DETAIL SHEET #7/M-4.1 FOR A/C CONTROL.
14. CONTRACTOR TO OFFSET NEW (W) 12"X10" DUCT ABOVE MAIN SUPPLY DUCT. SEE MECHANICAL DETAIL SHEET.
15. NEW DRY WELL. SEE DETAIL SHEET #5/M-4.1.

CONSTRUCTION NOTES:

1. CONTRACTOR SHALL COORDINATE WORK WITH OTHER TRADES AS NECESSARY PRIOR TO INSTALLATION.
2. CONTRACTOR SHALL MAINTAIN PROPER CLEARANCES FROM ALL ELECTRICAL EQUIPMENT AND SERVICE CLEARANCES FOR MECHANICAL EQUIPMENT.
4. FRESH AIR INTAKES SHALL BE 10'-0" MIN. AWAY FROM ALL EXHAUST OUTLETS, PLUMBING VENTS, AND FLUES.
5. CONTRACTOR SHALL COORDINATE EXACT EQUIPMENT PAD SIZES AND LOCATIONS WITH OTHER TRADES PRIOR TO INSTALLATION.
6. MAINTAIN MANUFACTURER MIN. CLEARANCES ON ALL AC UNITS.
7. BEFORE BIDDING ON THIS WORK, THE CONTRACTOR SHALL MAKE A CAREFUL EXAMINATION OF THE PREMISES, EXISTING EQUIPMENT AND SERVICES. HE SHALL DEFINITELY DETERMINE IN ADVANCE, THE METHODS OF INSTALLING AND CONNECTING THE NEW EQUIPMENT, DUCTWORK, AND PIPING THE MEANS TO BE PROVIDED FOR GETTING THE EQUIPMENT AND MATERIALS INTO PLACE AND SHALL MAKE HIMSELF THOROUGHLY FAMILIAR WITH ALL OF THE REQUIREMENTS OF THE PROJECT. FAILURE TO VISIT THE SITE WILL IN NO WAY RELIEVE THE SUCCESSFUL CONTRACTOR OF THE NECESSITY OF FURNISHING ANY MATERIAL OR PERFORMING ANY WORK THAT MAY BE REQUIRED TO COMPLETE THE WORK IN ACCORDANCE WITH THE DRAWINGS AND SPECIFICATIONS. THIS ADDITIONAL WORK SHALL BE PERFORMED WITHOUT ADDITIONAL COST TO THE OWNER.
8. BEFORE COMMENCEMENT OF WORK, THE CONTRACTOR SHALL VERIFY THE EXACT LOCATIONS AND DIMENSIONS OF ALL EXISTING EQUIPMENT AND ELECTRICAL SERVICES IN THE AREA OF CONSTRUCTION AND NOTIFY THE ENGINEER OF ANY DISCREPANCIES.
9. ALL NEW EXPOSED SHEET METAL DUCTWORK, SHEET METAL CURB / PLATFORM AND DUCT SUPPORT SHALL BE PREPARED AND PAINTED PER DISTRICT STANDARDS.

NORTH

BUILDING K - REMODEL FLOOR PLAN | 1/8" = 1'-0" | 1

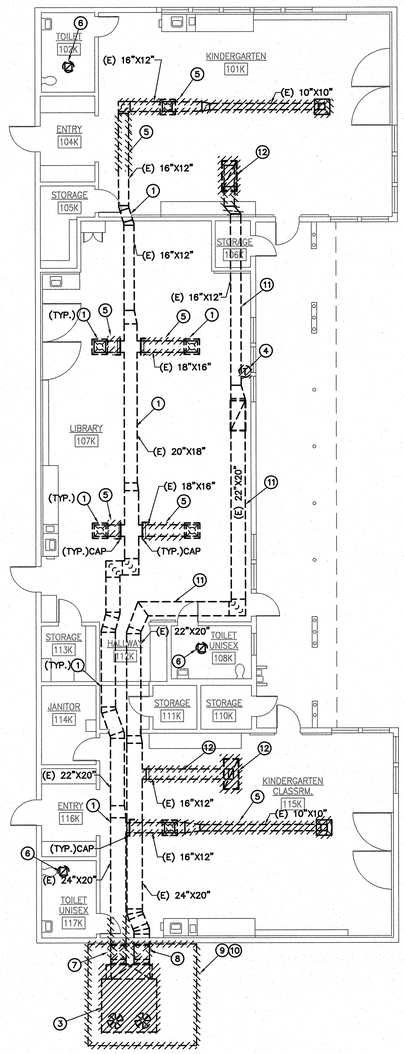

DEMOLITION KEY NOTES:

1. EXISTING MAIN SUPPLY DUCTWORK AND SUPPLY AIR DIFFUSERS TO REMAIN.
2.
3. EXISTING AC UNIT, AC UNIT CURB AND RELATED ACCESSORIES TO BE REMOVED AND REPLACED WITH NEW AC UNIT.
4. EXISTING T-STAT TO BE REMOVED.
5. PARTIAL EXISTING SUPPLY AIR DUCT AND EXISTING MANUAL VOLUME DAMPER TO BE REMOVED. CAP UNUSED DUCT OPENING.
6. EXISTING EXHAUST FAN AND DUCTWORK TO REMAIN.
7. EXISTING 24"X20" MAIN SUPPLY AIR DUCT TO BE REMOVED AND REPLACED.
8. EXISTING 24"X20" RETURN DUCT TO BE REMOVED AND REPLACED.
9. EXISTING CONCRETE PAD TO BE REMOVED AND REPLACED WITH A NEW PAD.
10. EXISTING FENCE TO BE REMOVED AND REPLACED WITH A NEW FENCE AT A NEW LOCATION.
11. EXISTING MAIN RETURN DUCT AND AIR GRILLES TO REMAIN.
12. EXISTING RETURN DUCT AND AIR GRILLES TO BE REMOVED.

GENERAL DEMOLITION NOTES

1. OWNER SHALL HAVE FIRST RIGHT OF REFUSAL ON ALL ITEMS TO BE REMOVED.CONTRACTOR SHALL VERIFY ALL SUCH ITEMS WITH OWNER PRIOR TO REMOVAL. ALL ITEMS NOT REFUSED BY OWNER SHALL BE REMOVED INTACT AND FULLY FUNCTIONAL BY REFUSED BY OWNER SHALL BE PROPERLY DISPOSED OF BY CONTRACTOR.
2. CONTRACTOR SHALL RE-USE EXISTING OPENINGS IN WALLS AND ROOF WHEREVER POSSIBLE. COORDINATE WITH OTHER TRADES AS NECESSARY. GENERAL CONTRACTOR SHALL MODIFY OPENING AS REQUIRED TO ACCOMMODATE NEW MECHANICAL DEVICE.
3. GENERAL CONTRACTOR SHALL PATCH ALL OPENINGS IN WALLS, ROOF, ETC. THAT WILL NOT BE REUSED FOR FUTURE WORK. COORDINATE AS NECESSARY WITH OTHER TRADES.
4. CONTRACTOR SHALL COORDINATE WITH OWNER PRIOR TO ANY WORK BEING DONE STORAGE OF MECHANICAL EQUIPMENT TO BE RE-USED DURING CONSTRUCTION.
5. PRIOR TO ANY WORK BEING DONE CONTRACTOR SHALL MAKE A CAREFUL EVALUATION OF THE EXISTING CONDITIONS AND VERIFY ALL METHODS OF REMOVAL AND INSTALLATION OF MECHANICAL EQUIPMENT.
6. CONTRACTOR SHALL COORDINATE ALL DEMOLITION WORK WITH THE WORK OF ALL OTHER TRADES.
7. CONTRACTOR SHALL CLEAN ALL AIR DEVICES AND DUCTWORK TO REMAIN PER SPECIFICATIONS.
8. CONTRACTOR SHALL CLEAN ALL EXISTING DUCTWORK INCLUDING LINED DUCTWORK TO REMAIN PER SPECIFICATIONS. PRIOR TO BID AND BEFORE COMMENCEMENT OF ANY WORK ALL EXISTING DUCTWORK TO REMAIN SHALL BE CONFIRMED ON SITE.

NORTH

BUILDING K - DEMOLITION FLOOR PLAN | 1/8" = 1'-0" | 2

ARCHITECTS
WLC
CLIENT FOCUSED • PASSION DRIVEN

SOUTHERN CALIFORNIA
8163 ROCHESTER AVENUE, SUITE 100
RANCHO CUCAMONGA
CALIFORNIA 91730-0729

TEL: 909-987-0909
www.wlcarchitects.com

LONGFELLOW ELEMENTARY SCHOOL HVAC REPLACEMENT

COMPTON UNIFIED SCHOOL DISTRICT
1101 S DWIGHT AVE.
COMPTON, CA 90220

LICENSED ARCHITECT — KEVIN GRAHAM — C-26046 — 03-31-19 — STATE OF CALIFORNIA

REGISTERED PROFESSIONAL ENGINEER — ROBERT BANKERD — No. M29253 — Exp. 6/30/19 — MECHANICAL — STATE OF CALIFORNIA

CONSULTANT

R.E. 19-23

IDENTIFICATION STAMP
DIV. OF THE STATE ARCHITECT
OFFICE OF REGULATION SERVICES
APPL 03-118423
AC — FLS — SS
DATE MAR 0 6 2018

NO	DATE	BY	DESCRIPTION
			REVISIONS

DRAWN: KC	CHECKED:
DATE: 3/6/2018	SCALE:
PROJECT NUMBER: 570064	

BUILDING K DEMO AND REMODEL FLOOR PLANS

DRAWING NUMBER: M-2.6

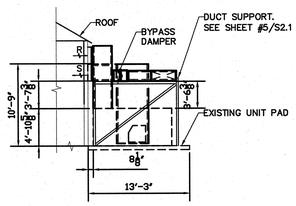

SECTION A-A

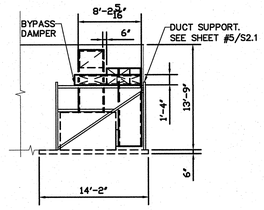

SECTION B-B

MECHANICAL SECTION BUILDING E

SCALE NONE 6

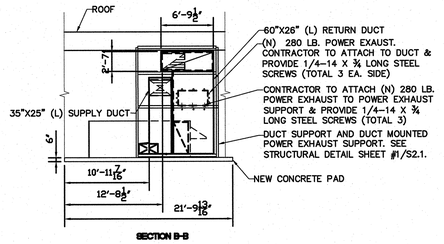

SECTION B-B

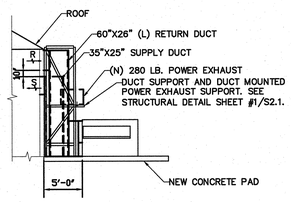

SECTION A-A

MECHANICAL SECTION BUILDING F

SCALE NONE 3

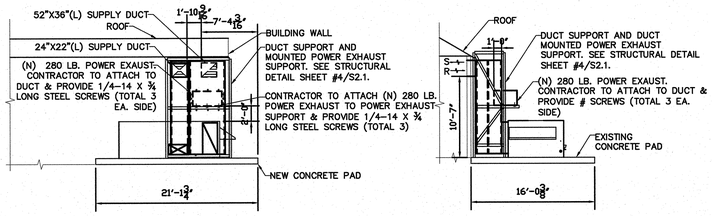

SECTION B-B

SECTION A-A

MECHANICAL SECTION BUILDING K

SCALE NONE 5

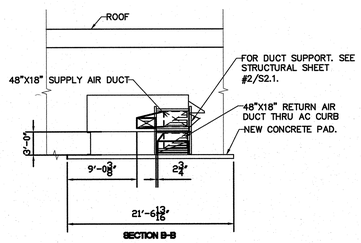

SECTION B-B

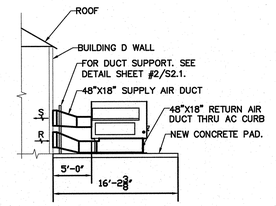

SECTION A-A

MECHANICAL SECTION BUILDING D

SCALE NONE 2

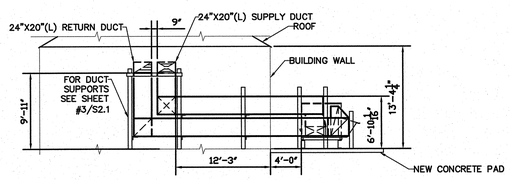

SECTION A-A

MECHANICAL SECTION BUILDING G

SCALE NONE 4

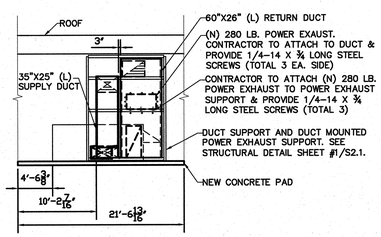

SECTION B-B

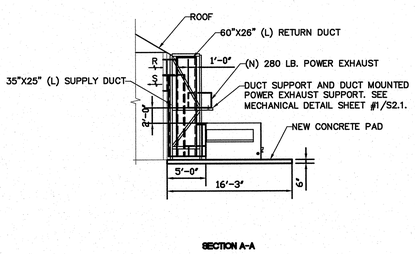

SECTION A-A

MECHANICAL SECTION BUILDING C

SCALE NONE 1

ARCHITECTS
WLC
CLIENT FOCUSED • PASSION DRIVEN

SOUTHERN CALIFORNIA
8163 ROCHESTER AVENUE, SUITE 100
RANCHO CUCAMONGA
CALIFORNIA 91730-0729

TEL: 909-987-0909

www.wlcarchitects.com

LONGFELLOW ELEMENTARY SCHOOL HVAC REPLACEMENT

COMPTON UNIFIED SCHOOL DISTRICT
1101 S DWIGHT AVE.
COMPTON, CA 90220

LICENSED ARCHITECT — MARK GRAHAM C-26046 03-31-19 — STATE OF CALIFORNIA

REGISTERED PROFESSIONAL ENGINEER — ROBERT BANEKOV No. M29253, Exp. 6/30/19 — MECHANICAL — STATE OF CALIFORNIA

CONSULTANT

IDENTIFICATION STAMP
DIV. OF THE STATE ARCHITECT
OFFICE OF REGULATION SERVICES
APPL 03-118423
AC — FLS — SS KEY
DATE MAR 0 9 2018
FILE: 19-23

NO	DATE	BY	DESCRIPTION
			REVISIONS

DRAWN: KC	CHECKED:
DATE: 3/6/2018	SCALE:
PROJECT NUMBER: 570064	

MECHANICAL SECTIONS

DRAWING NUMBER: M-3.1

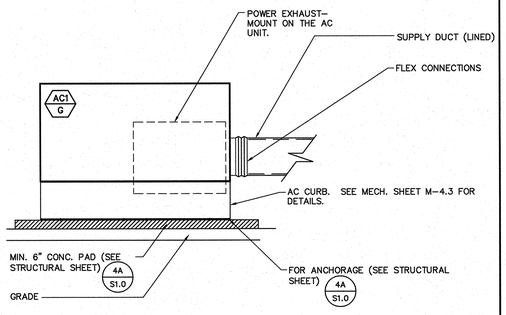

AC UNIT WITH CURB MOUNTING DETAIL

SCALE NONE | 13

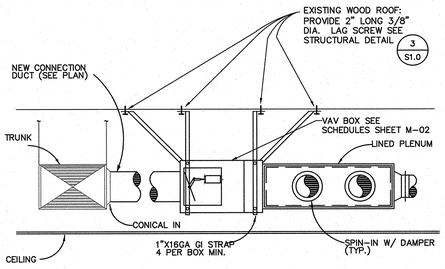

VAV BOX DETAIL

SCALE NONE | 11

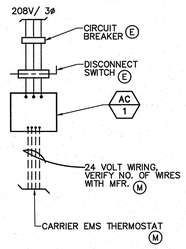

A/C CONTROL

SCALE NONE | 7

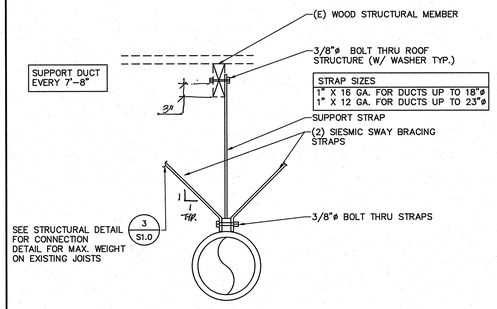

DUCT SUPPORT DETAIL – WOOD

SCALE NONE | 4

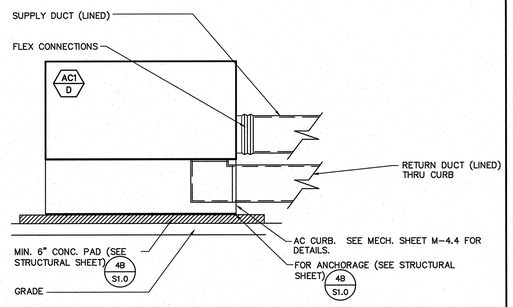

AC UNIT WITHOUT CURB MOUNTING DETAIL

SCALE NONE | 10

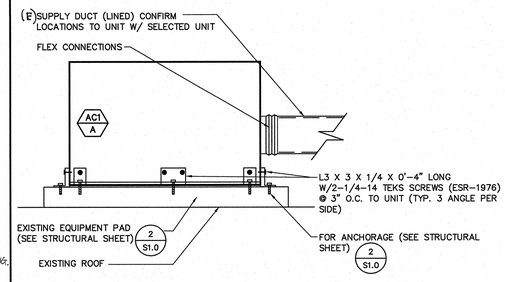

AC UNIT WITHOUT CURB MOUNTING DETAIL

SCALE NONE | 6

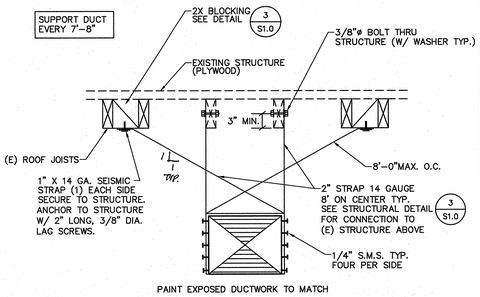

EXPOSED DUCT SUPPORT DETAIL – WOOD

SCALE NONE | 3

AC UNIT WITH DUCT THRU CURB MOUNTING DETAIL

SCALE NONE | 9

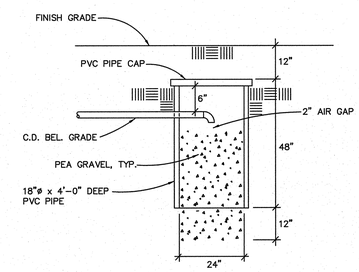

DRYWELL DETAIL

SCALE NONE | 5

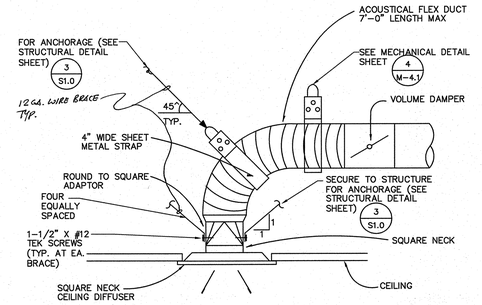

CEILING DIFFUSER DETAIL

SCALE NONE | 2

NOT USED

SCALE NONE | 12

NOT USED

SCALE NONE | 8

NOT USED

SCALE NONE

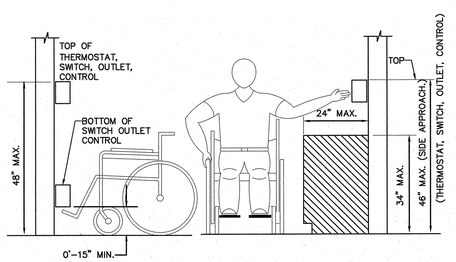

ADA CONTROL, DEVICE MOUNTING HEIGHT DETAIL

SCALE NONE | 1

ARCHITECTS
WLC
CLIENT FOCUSED • PASSION DRIVEN
SOUTHERN CALIFORNIA
8163 ROCHESTER AVENUE, SUITE 100
RANCHO CUCAMONGA
CALIFORNIA 91730-0729
TEL: 909-987-0909
www.wlcarchitects.com

LONGFELLOW ELEMENTARY SCHOOL HVAC REPLACEMENT

COMPTON UNIFIED SCHOOL DISTRICT
1101 S DWIGHT AVE.
COMPTON, CA 90220

LICENSED ARCHITECT MARK GRAHAM C-26046 03-31-19 STATE OF CALIFORNIA

REGISTERED PROFESSIONAL ENGINEER MARK BANERJEE No. M29253 Exp. 6/30/19 MECHANICAL STATE OF CALIFORNIA

CONSULTANT

IDENTIFICATION STAMP
DIV. OF THE STATE ARCHITECT
OFFICE OF REGULATION SERVICES
APPL 03-118423
AC FLS SS
DATE MAY 0 6 2019
FILE: 19-23

NO	DATE	BY	DESCRIPTION
1			REVISIONS

DRAWN: KC | CHECKED:
DATE: 3/6/2018 | SCALE:
PROJECT NUMBER: 570064

MECHANICAL DETAILS

DRAWING NUMBER: M-4.1

DETAIL-3

MAKE	MAKE	TYPE	SIZE	CURB WT
AC-1/G	CARRIER	48LCB	12A	220#

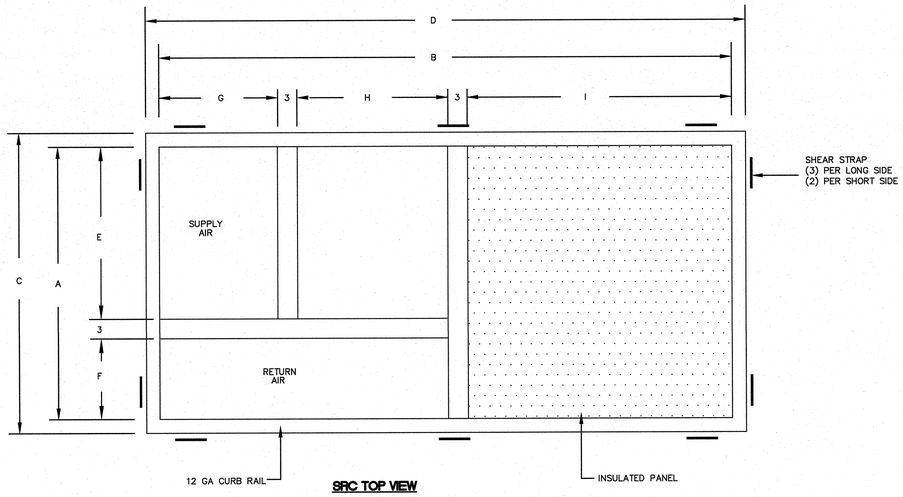

SRC TOP VIEW

A	B	C	D	E	F	G	H	I			
54-1/4	105-3/4	57-3/4	109-1/4	35-7/16	15-13/16	29-7/16	20-15/16	52-7/8			
						J	K	L	M	N	O
						60-1/16	111-3/4	3	3	109-3/4	58-1/16

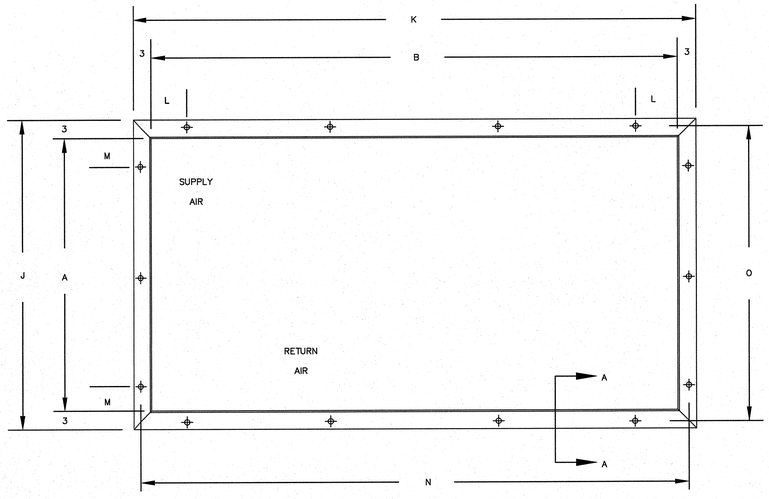

SRC FOOTPRINT

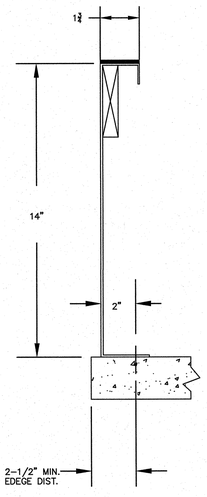

SECTION A-A

NOTES:

1. N & O DIMENSIONS ARE CENTERLINES OF ANCHOR HOLES IN CURB BOTTOM FLANGE.
2. DUCT SUPPORTS NOT SHOWN FOR CLARITY.
3. FOR ANCHORAGE, SEE STRUCTURAL DETAIL SHEET #4/S1.0.

TOP AND BOTTOM CURB DETAILS — SCALE NONE — 3

DETAIL-2

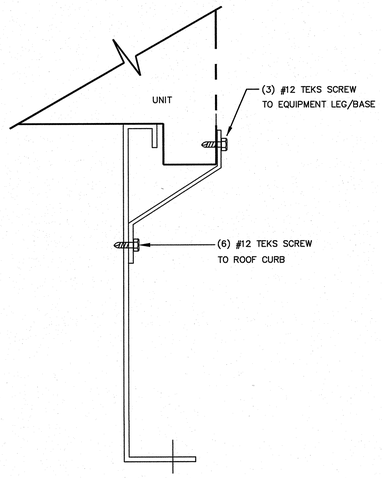

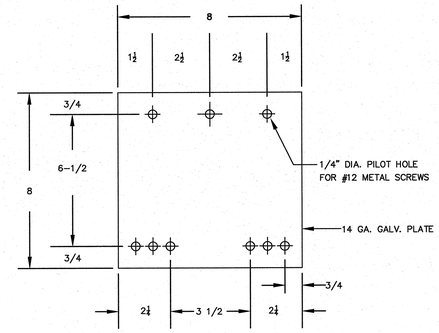

SEISMIC STRAP

ISOLATOR AND SEISMIC STRAP DETAIL — SCALE NONE — 2

DETAIL-1

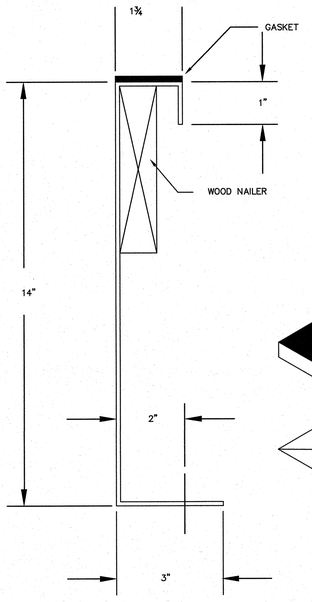

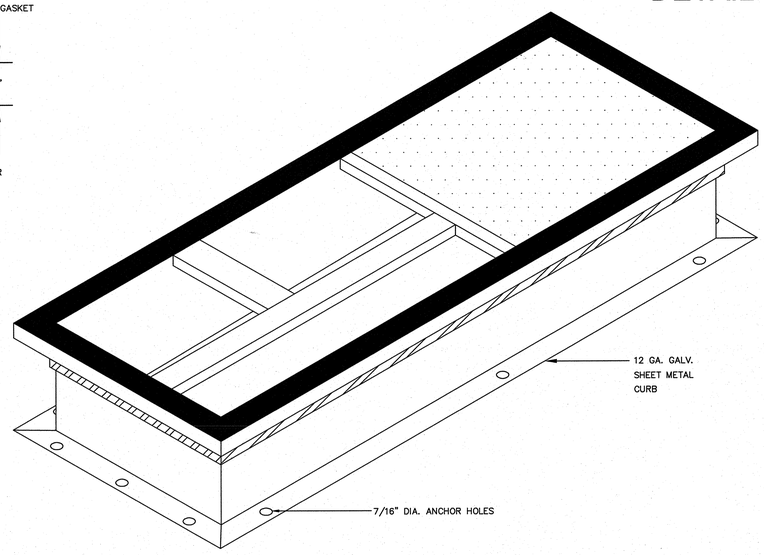

NOTES:

1. FOR ANCHOR REQUIREMENTS AND DETAILS OF ISOLATORS AND SEISMIC STRAPS, SEE DETAIL 2, 3.
2. SUBMITTED ROOF CURBS ARE LEVEL. PITCHED ROOF CURBS ARE AVAILABLE UPON REQUEST TO MATCH ROOF SLOPE.
3. NOT FOR CONSTRUCTION, ALL DIMENSIONS REQUIRE FINAL REVIEW AT COMMENCEMENT OF PROJECT

AC1/G UNITS ISO CURB MOUNTING EQUIPMENT PLATFORM DETAIL — SCALE NONE — 1

WLC ARCHITECTS
CLIENT FOCUSED • PASSION DRIVEN
SOUTHERN CALIFORNIA
8163 ROCHESTER AVENUE, SUITE 100
RANCHO CUCAMONGA
CALIFORNIA 91730-0729
TEL: 909-987-0909
www.wlcarchitects.com

LONGFELLOW ELEMENTARY SCHOOL
HVAC REPLACEMENT
COMPTON UNIFIED SCHOOL DISTRICT
1101 S DWIGHT AVE.
COMPTON, CA 90220

LICENSED ARCHITECT MARK GRAHAM C-26046 03-31-19 STATE OF CALIFORNIA

REGISTERED PROFESSIONAL ENGINEER ABBY BANERJEE No. M29253 Exp. 6/30/19 MECHANICAL STATE OF CALIFORNIA

CONSULTANT

IDENTIFICATION STAMP
DIV. OF THE STATE ARCHITECT
OFFICE OF REGULATION SERVICES
APPL 03-118423
AC — FLS — SS
DATE

FILE: 19-23

NO	DATE	BY	DESCRIPTION

REVISIONS

DRAWN: KC — CHECKED:
DATE: 3/6/2018 — SCALE:
PROJECT NUMBER: 570064

MECHANICAL DETAILS

DRAWING NUMBER: M-4.3